# Safety Light Curtain
# Orion1 Extended

## Approvals:

## Application:

- For finger and hand detection
- When the light guard should be close to the hazardous zone
- When muting or blanking are necessary
- When several devices should be connected in series (cascading)
- When space is an issue (no dead zone)



## Features:

- Finger and hand detection
- 7 m and 20 m operating distances (finger and hand detection)
- Compact dimensions
- Local reset and EDM
- Muting and Blanking
- Cascading
- No dead zone

The Orion1 Extended light curtains are used for finger or hand detection, usually quite close to the dangerous machine, when advanced functions like muting or cascading are necessary.

### Easy to use
- Muting sensors are connected directly to the light curtain, with no need for a remote extra muting module.
- No dead zone: the resolution is guaranteed along the whole length of the light curtain with no need for extra mechanical guard.
- Cascading with the standard units, no separate slave or master units.

### Faster installation
- Alignment help and a wide angle within the limits of a Type 4 device facilitate alignment.
- M12 connectors speed up cabling.

### Less downtime
- Since the alignment level is displayed on the unit, the alignment can be improved before an unwanted stop occurs.
- Coding protects against mutual interferences.
- Extensive error indication reduces troubleshooting time.
- Protective tubes and lens shields protect the devices in harsh environments.



**Muting: the machine stops when a person goes through but not when the cases go through.**

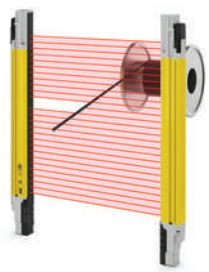

**Floating blanking: a hand through the detection zone will stop the machine and the moving wire will not.**

## Technical data

| | |
|---|---|
| Functional Safety Data | |
| EN ISO 13849-1:2008 | PL e, Cat 4 |
| EN 61508-1..4:2010 | SIL3; $PFH_d$ = 2.64 x$10^{-9}$; HFT = 1; Mission time = 20 years |
| EN 62061:2005/A1:2013 | SIL CL 3 |
| Power supply | +24 VDC ± 20 % |
| Power consumption | |
| Transmitter | 3 W max |
| Receiver | 5 W max (without load) |
| Outputs | 2 PNP |
| Short-circuit protection: | 1.4 A max |
| Output current: | 0.5 A max / output |
| Output voltage – ON: | Vdd -1 V min |
| Output voltage – OFF: | 0.2 V max |
| Capacitive load: | 2.2 µF at +24 VDC max |
| Current for external lamp | 20 mA min; 300 mA max |
| Connectors with specific cables | Transmitter with M12-C02PT2T: M12-5 pole male connector<br>Receiver with M12-C02PT6RB: M12-12 pole male connector<br>Receiver with M12-C02PT62RM: M12-12 pole male connector + M12-5 pole male connector |
| Cable length (for power supply) | 50 m max |
| Light emission ( λ ) | Infrared, LED (950 nm) |
| Resolution | 14 - 30 mm |
| Operating distance | 0.2…20 m for 30 mm<br>0.2…7 m for 14 mm |
| Ambient light rejection | According to IEC-61496-2:2013 |
| Operating temperature | 0…+ 50 °C |
| Storage temperature | - 25…+ 70 °C |
| Humidity range | 15…95 % (no condensation) |
| Protection class | IP65 (EN 60529:2000) |
| Weight | 1.35 kg / meter for each single unit |
| Housing material | Painted aluminium (yellow RAL 1003) |
| Front side material | PMMA |
| Cap material | PBT Valox 508 |

Function settings at delivery

The functions are configured with push-buttons on the units.

| | |
|---|---|
| | No code |
| | Muting |
| | **EDM enabled** |
| | **Automatic Reset** |
| | T/X muting |
| | 10 min muting time-out |
| | Override trigger = level |
| | |
| | Long range |

* Two specific cables must be ordered with Orion1 Extended, one for the transmitter and one for the receiver. See next page.

## Connection

### Connection transmitter

| | |
|---|---|
| Brown (1) | + 24 VDC |
| White (2) | Test |
| Blue (3) | 0 V |
| Black (4) | Earth |
| Grey (5) | *Not used* |




For the transmitter: M12-C02PT2T

### Connection receiver with muting cable M12-C02PT62RM

#### M12-12 connector

| | |
|---|---|
| Brown (1) | + 24 VDC |
| Blue (2) | 0 V |
| White (3) | Reset/Acknowledge/Align |
| Green (4) | Override1 |
| Pink (5) | OSSD2 |
| Yellow (6) | EDM |
| Black (7) | Muting selection |
| Grey (8) | OSSD1 |
| Red (9) | Override2 |
| Violet (10) | Muting lamp |
| Grey-pink (11) | Override status |
| Red-blue (12) | Earth |

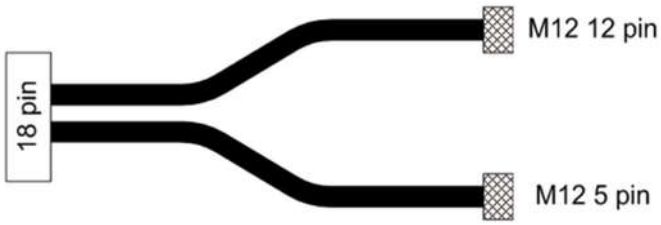


For the receiver when muting: M12-C02PT62RM

#### M12-5 connector

| | |
|---|---|
| Brown (1) | + 24 VDC |
| White (2) | Muting2 |
| Blue (3) | 0 V |
| Black (4) | Muting1 |
| Grey (5) | *Not used* |

### Connection receiver with blanking cable M12-C02PT6RB, to be used whenever muting is not necessary.

#### M12-12 connector

| | |
|---|---|
| Brown (1) | + 24 VDC |
| Blue (2) | 0 V |
| White (3) | Reset/Acknowledge/Align |
| Green (4) | Teach in |
| Pink (5) | OSSD2 |
| Yellow (6) | EDM |
| Black (7) | *Not used* |
| Grey (8) | OSSD1 |
| Red (9) | Tolerance |
| Violet (10) | Lamp |
| Grey-pink (11) | *Not used* |
| Red-blue (12) | Earth |




For the receiver when no muting: M12-C02PT6RB

* Colors according to ABB Jokab Safety standard cables

Two specific cables must be ordered with Orion1 Extended, one for the transmitter and one for the receiver.

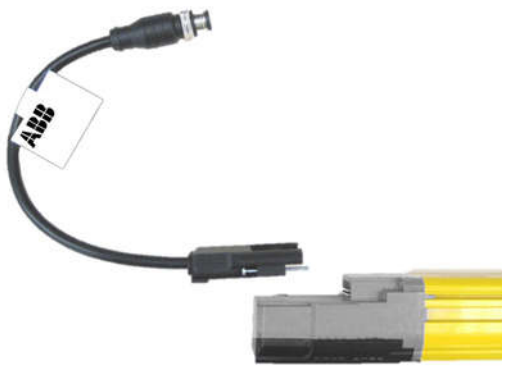




# Connection examples

## Connection to a RT9 safety relay

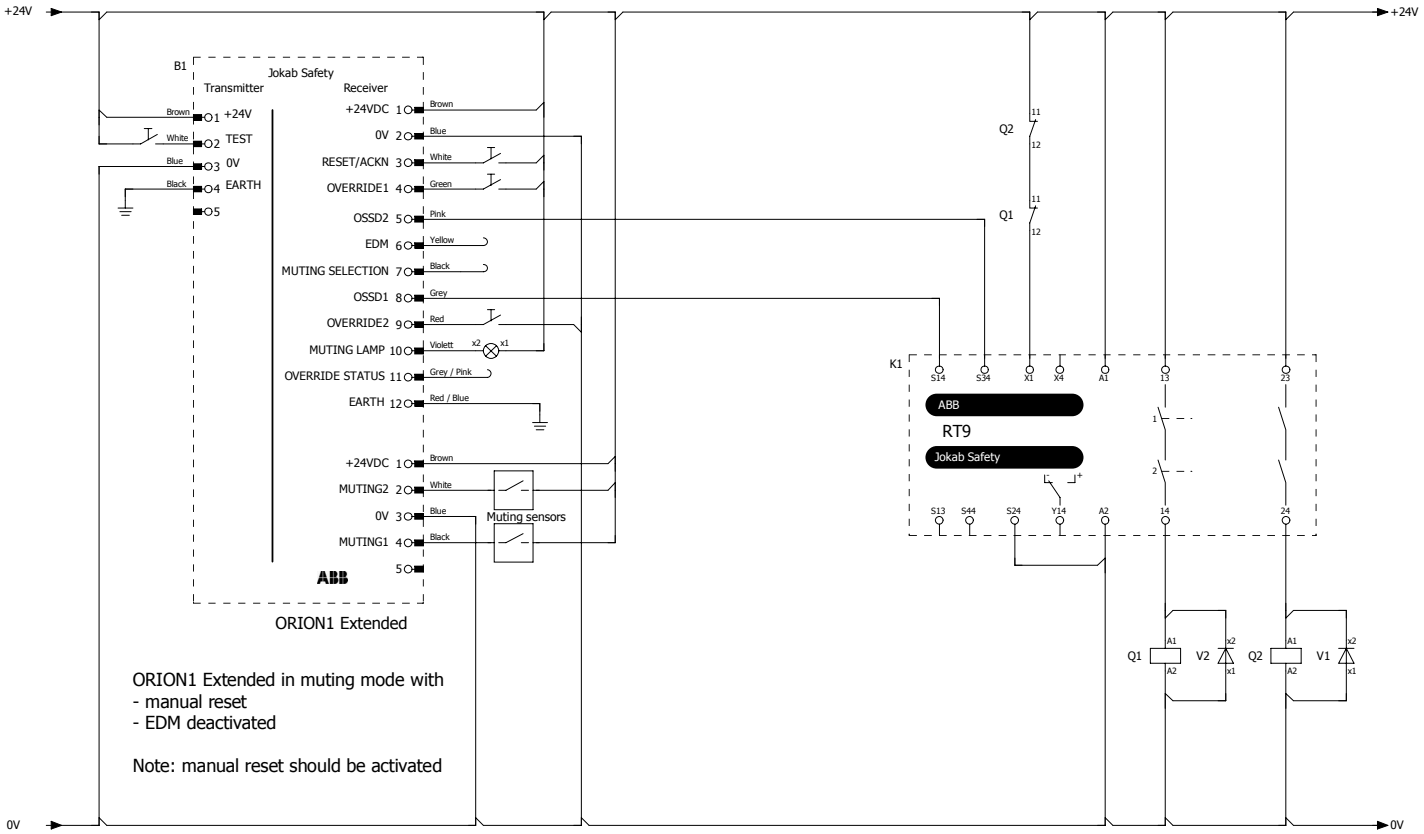


## Connection to a Pluto B20 Safety PLC

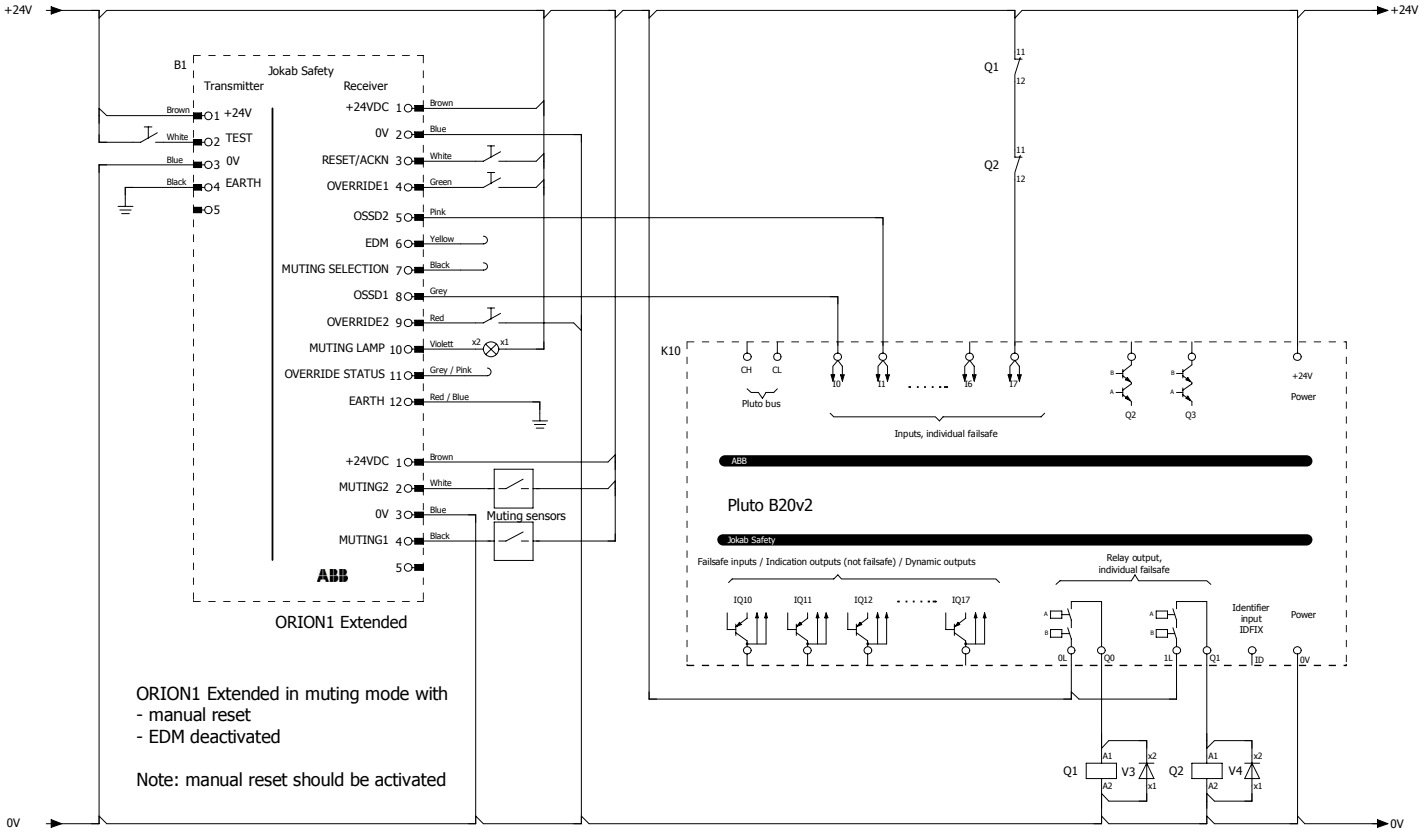

## Models and ordering information

| | | |
|---|---|---|
| Orion1-4-14-030-E | 2TLA022301R0100 | Orion1 Extended Transmitter + Receiver - R = 14 mm - H = 300 mm |
| Orion1-4-14-045-E | 2TLA022301R0200 | Orion1 Extended Transmitter + Receiver - R = 14 mm - H = 450 mm |
| Orion1-4-14-060-E | 2TLA022301R0300 | Orion1 Extended Transmitter + Receiver - R = 14 mm - H = 600 mm |
| Orion1-4-14-075-E | 2TLA022301R0400 | Orion1 Extended Transmitter + Receiver - R = 14 mm - H = 750 mm |
| Orion1-4-14-090-E | 2TLA022301R0500 | Orion1 Extended Transmitter + Receiver - R = 14 mm - H = 900 mm |
| Orion1-4-14-105-E | 2TLA022301R0600 | Orion1 Extended Transmitter + Receiver - R = 14 mm - H = 1050 mm |
| Orion1-4-14-120-E | 2TLA022301R0700 | Orion1 Extended Transmitter + Receiver - R = 14 mm - H = 1200 mm |
| Orion1-4-14-135-E | 2TLA022301R0800 | Orion1 Extended Transmitter + Receiver - R = 14 mm - H = 1350 mm |
| Orion1-4-14-150-E | 2TLA022301R0900 | Orion1 Extended Transmitter + Receiver - R = 14 mm - H = 1500 mm |
| Orion1-4-14-165-E | 2TLA022301R1000 | Orion1 Extended Transmitter + Receiver - R = 14 mm - H = 1650 mm |
| Orion1-4-14-180-E | 2TLA022301R1100 | Orion1 Extended Transmitter + Receiver - R = 14 mm - H = 1800 mm |
| Orion1-4-30-030-E | 2TLA022303R0100 | Orion1 Extended Transmitter + Receiver - R = 30 mm - H = 300 mm |
| Orion1-4-30-045-E | 2TLA022303R0200 | Orion1 Extended Transmitter + Receiver - R = 30 mm - H = 450 mm |
| Orion1-4-30-060-E | 2TLA022303R0300 | Orion1 Extended Transmitter + Receiver - R = 30 mm - H = 600 mm |
| Orion1-4-30-075-E | 2TLA022303R0400 | Orion1 Extended Transmitter + Receiver - R = 30 mm - H = 750 mm |
| Orion1-4-30-090-E | 2TLA022303R0500 | Orion1 Extended Transmitter + Receiver - R = 30 mm - H = 900 mm |
| Orion1-4-30-105-E | 2TLA022303R0600 | Orion1 Extended Transmitter + Receiver - R = 30 mm - H = 1050 mm |
| Orion1-4-30-120-E | 2TLA022303R0700 | Orion1 Extended Transmitter + Receiver - R = 30 mm - H = 1200 mm |
| Orion1-4-30-135-E | 2TLA022303R0800 | Orion1 Extended Transmitter + Receiver - R = 30 mm - H = 1350 mm |
| Orion1-4-30-150-E | 2TLA022303R0900 | Orion1 Extended Transmitter + Receiver - R = 30 mm - H = 1500 mm |
| Orion1-4-30-165-E | 2TLA022303R1000 | Orion1 Extended Transmitter + Receiver - R = 30 mm - H = 1650 mm |
| Orion1-4-30-180-E | 2TLA022303R1100 | Orion1 Extended Transmitter + Receiver - R = 30 mm - H = 1800 mm |

## Cables

| | | |
|---|---|---|
| M12-C02PT2T | 2TLA022315R0100 | Transmitter cable for Orion1 Extended |
| M12-C02PT6RB | 2TLA022315R0200 | Receiver cable for Orion1 Extended when no muting |
| M12-C02PT62RM | 2TLA022315R0300 | Receiver cable for Orion1 Extended when muting |
| PT-C1PT | 2TLA022315R1000 | Cascade cable for Orion1 Extended, 1 m |
| PT-C05PT | 2TLA022315R1100 | Cascade cable for Orion1 Extended, 0.5 m |
| PT-C005PT | 2TLA022315R1200 | Cascade cable for Orion1 Extended, 0.05 m |
| M12-C61 | 2TLA020056R0000 | Straight M12-5 female connector with 6 m shielded cable |
| M12-C101 | 2TLA020056R1000 | Straight M12-5 female connector with 10 m shielded cable |
| M12-C201 | 2TLA020056R1400 | Straight M12-5 female connector with 20 m shielded cable |
| M12-C65 | 2TLA020056R7200 | Straight M12-12 female connector with 6 m shielded cable |
| M12-C105 | 2TLA020056R7300 | Straight M12-12 female connector with 10 m shielded cable |
| M12-C205 | 2TLA020056R7500 | Straight M12-12 female connector with 20 m shielded cable |

## Spare parts (delivered with products originally)

| | | |
|---|---|---|
| JSM Orion01 | 2TLA022310R0000 | 4 standard brackets for Orion1 & Orion2 |

## Accessories

| | | |
|---|---|---|
| Orion TP-14 | 2TLA022310R5200 | Orion Test Piece 14 mm |
| Orion TP-30 | 2TLA022310R5300 | Orion Test Piece 30 mm |
| Orion Laser | 2TLA022310R5000 | Orion Laser pointer |
| JSM Orion01 | 2TLA022310R0000 | 4 standard brackets for Orion1 & Orion2 |
| JSM Orion06 | 2TLA022310R0400 | Kit for mounting of Orion1 & Orion2 in Stand (4 pieces) |
| JSM Orion07 | 2TLA022310R0500 | Kit for mounting of Orion1 & Orion2 in Stand (6 pieces) |
| JSM Orion11 | 2TLA022310R0900 | Kit for mounting of Orion1 Mirror in Stand |
| Orion Stand Plate | 2TLA022312R5000 | Orion Plate kit for adjustment of protective stand |
| Orion1 Mirror* | | Deviating mirror to be mounted in Orion Stand with 1 kit JSM Orion11 |
| Orion Stand* | | Protective stand |

* These accessories are available in different sizes. More information on www.abb.com/jokabsafety.

# Dimensions

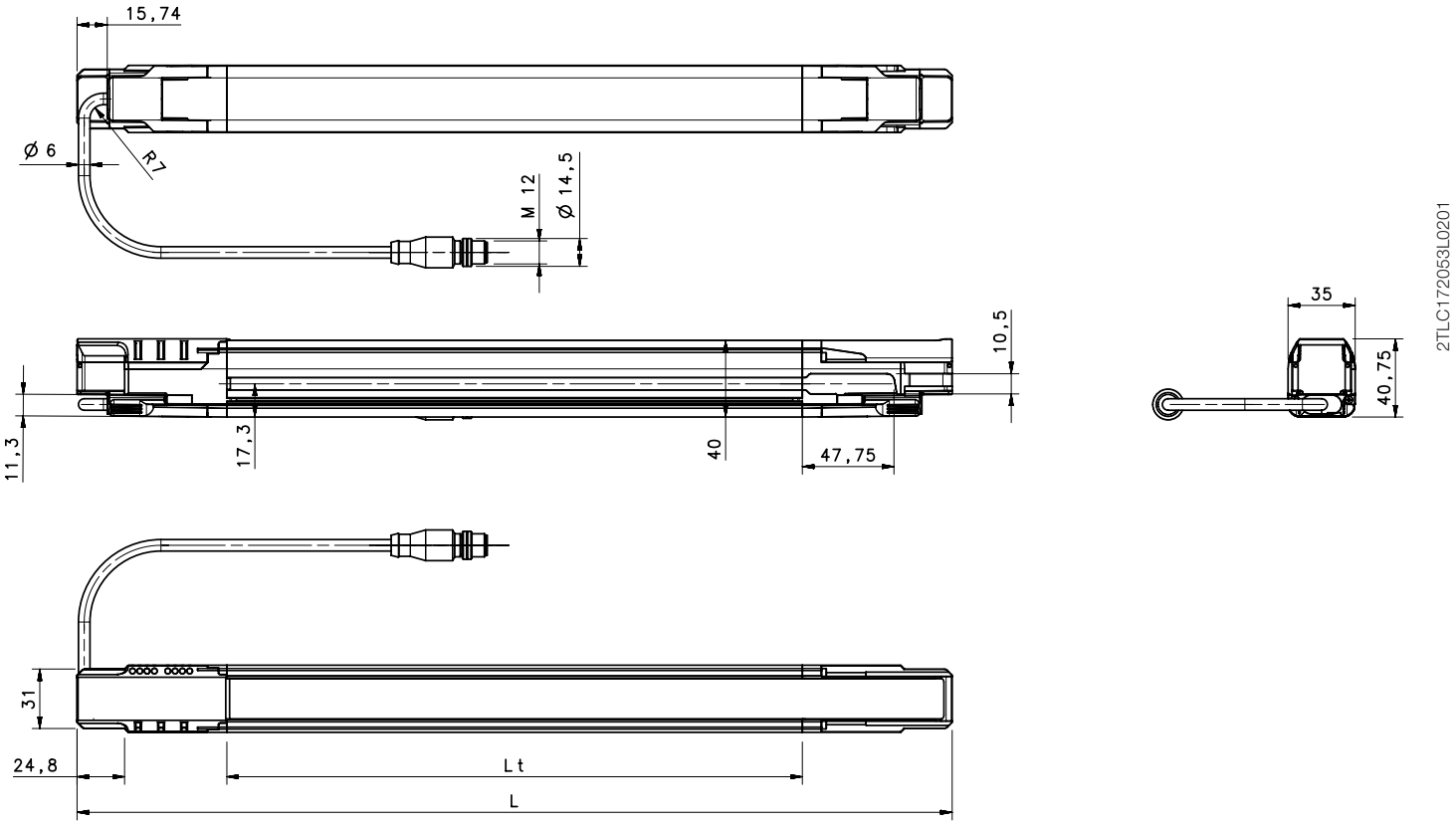


2TLC172053L0201

All dimensions in millimeters

| Model | Lt (mm) | L (mm) |
|---|---|---|
| Orion1-4-xx-030-E | 150 | 306.30 |
| Orion1-4-xx-045-E | 300 | 456.30 |
| Orion1-4-xx-060-E | 450 | 606.30 |
| Orion1-4-xx-075-E | 600 | 756.30 |
| Orion1-4-xx-090-E | 750 | 906.30 |
| Orion1-4-xx-105-E | 900 | 1056.30 |
| Orion1-4-xx-120-E | 1050 | 1206.30 |
| Orion1-4-xx-135-E | 1200 | 1356.30 |
| Orion1-4-xx-150-E | 1350 | 1506.30 |
| Orion1-4-xx-165-E | 1500 | 1656.30 |
| Orion1-4-xx-180-E | 1650 | 1806.30 |

xx = Resolution (14 - 30 mm)

**ABB AB**
**Jokab Safety**
Varlabergsvägen 11
SE-434 39 Kungsbacka
Tel. +46 (0) 21-32 50 00

**www.abb.com/jokabsafety**

Power and productivity
for a better world™