Your Expert Partner for **Human Machine Interfaces**

Actuator

Distribution by
Rs-online

61-
6451.4247

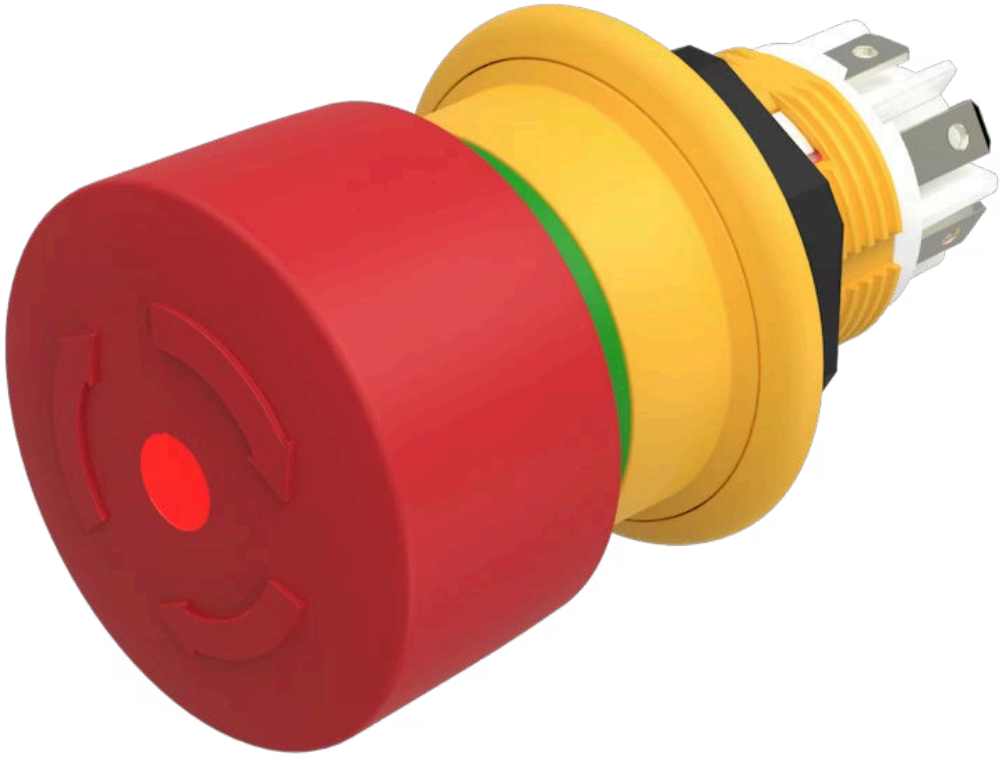

https://rs-online.eao.com/component/61-6451.4...

Your product:



61-6451.4247
Actuator

FRONT

Front dimension: Ø 27 mm

Front form: Round

MOUNTING

Mounting type: Panel mounting

OPERATING-/INDICATION PART

Lens colour: Red

Lens material: Plastic

Lens illumination: Illuminated

Lens shape: Mushroom-head

Illumination colour: Red

ELECTRICAL CHARACTERISTICS

Switching voltage and switching current:

Alternating current usage category AC-15 according to EN IEC 60947-5-1	
Voltage	50 VAC
Current	0,2 A
DC usage category DC-13 according to EN IEC 60947-5-1	
Voltage	50 VDC
Current	0,2 A

Contacts: 1 NC

Contact resistance: At 20 mV, 100 mA (IEC 60512-2-1) Insulation resistance
2 MΩ between the open contacts
7 MΩ towards the panel (DIN IEC 60512-3-1)

Operating voltage: 6 - 32 V DC

Rated Operational Voltage Ue:	50 VAC / DC, according to EN / IEC 60947-5-1
Rated impulse withstand voltage Uimp:	0.5 kV, according to EN / IEC 60947-1
Rated insulation voltage Ui:	250 VAC/DC according to EN IEC 60947-1
Rated short-circuit current caused:	1 000 A, type of short-circuit device 2 A gG (EN 60947-5-1)
Recommended minimum operational data:	Voltage 1 VAC/DC Current 1 mA
Switching rating:	50 V AC/DC @ 0,2 A
Electrical lifetime:	≥20 000 cycles of operation
Electric strength:	500 VAC, 50 Hz, 1 minute according to DIN IEC 60512-2
Overvoltage category:	II, according to EN / IEC 61058-1
Pollution degree:	3, according to EN IEC 60947-1
Standards:	According to EN 60947-5-1, EN 60947-5-5, DIN EN ISO 13850, EN IEC 60204
Thermal current Ith:	0.5 A (EN IEC 60947-5-1 / max. current in continuous operation at max. + 55 degrees C)

MECHANICAL CHARACTERISTICS

Terminal:	Plug-in terminal, 2.8 x 0.5 mm
Switching action:	Maintained
Release type:	Twist to unlock
Mechanical lifetime:	≥20 000 cycles of operation
Operating force:	30 N ±4 N
Operating Travel:	4.2 mm
Tightening torque:	Max. 0.8 Nm
Weight:	0.018 kg

AMBIENT CONDITION

IP Protection:	IP67 front side, according to EN IEC 60529/A1:2010-04, IP69K front side, according to EN IEC 60529/A1:2010-04, Panel surface roughness Ra1.6
IK Protection:	IK06
Operating temperature:	– 25 °C ... + 55 °C
Storage temperature:	– 40 °C ... + 85 °C
Shock resistance:	Max. 150 m / s^2, pulse width 11 ms, 3-axis, (semi-sinusoidal as per EN IEC 60068-2-27)

Vibration resistance:	Max. 100 m / s^2 from 10 Hz ... 500 Hz, 20 cycles, 3-axis (sinusoidal EN IEC 60068-2-6)
Climate resistance:	Damp heat, steady: 56 days, + 40 °C/93 % relative humidity, according to EN IEC 60068-2-78 Dry heat: 96 hours, + 65 °C, as per EN IEC 60068-2-2 Low temperature: 96 hours, – 25 °C (as per EN IEC 60068-2-1)) UV test, 56 days (EN 60068-2-5:1999)

CERTIFICATE

Approbations:	CB (EN 60947), UL NISD (cULus, UL EU) LISTED E-File-Nr.: E341760
Conformities:	CE, UKCA
REACH:	REACH compliant
RoHS:	RoHS compliant

OTHER

Short Description:	Actuator, Ø 27 mm, Mushroom-head, Illuminated, Red, Plastic, Round, 1 NC, Maintained, Plug-in terminal, 2.8 x 0.5 mm, Twist to unlock, Red
Kind of illlumination:	LED with polarity reversal protection
Dimension:	Ø 27 mm
Hints:	Application as per DIN EN ISO 13850 and EN 60204-1 Seal Part No. 61-9900 Anti-twist ring No. 51-910 Fixing nut No. 51-991 Plug-in terminals 2.8 mm x 0.5 mm are solderable without UL certificate Front plate thickness 1 ... 4 mm with an anti-rotaition ring Front plate thickness 1 ... 6 mm without an anti-rotaition ring
Wiring diagrams:	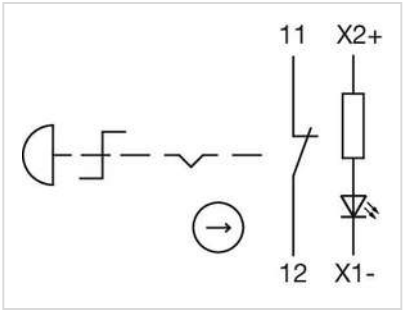
Component layouts:	



Mounting cut-outs:

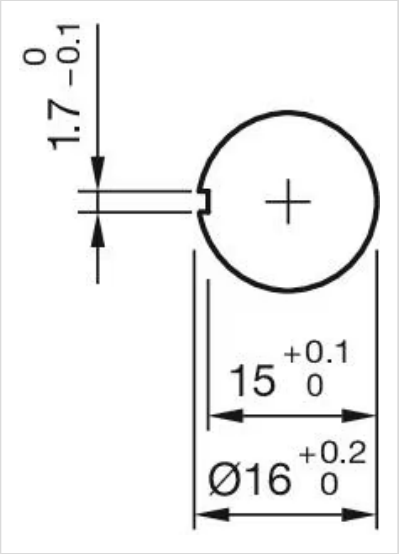

Dimension drawings:

