

Pushbutton without panel; maintained; 1 N/C; with cable 1m and M12A plug

Part no. C22-DR-X-K01-P5
Article no. 181087

Delivery programme

Product range			RMQ compact solution
Basic function			Pushbutton actuators
Single unit/Complete unit			Complete unit
Design			Flat
			maintained
Connection type			Cable (black) with M12A plug, 4 pole
Cable Length		m	1
Button plate			
			Without button plate
Degree of Protection			IP66, IP67, IP69K (front) IP65 (on rear)
Front ring			Bezel: titanium
Connection to SmartWire-DT			no
Contacts			
N/C = Normally closed			1 NC
Notes			= safety function, by positive opening to IEC/EN 60947-5-1
Actuator travel and actuation force as per DIN EN 60947-5-1, K.5.4.1			
	mm		4.65
Maximum travel	mm		5.7
Minimum force for positive opening	N		15
Contact sequence			

Contact travel ■ = Contact closed □ = Contact open			
Contact diagram			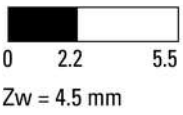
Positive opening (ZW)			yes

Technical data

General

Standards			IEC/EN 60947-5-1 VDE 0660
Lifespan, mechanical	Operations	x 10^6	> 5
Operating frequency	Operations/h		3600
Actuating force		n	5
Plug tightening torque		N/m	1
Tightening torque Threaded ring		Nm	2
Climatic proofing			Damp heat, constant, to IEC 60068-2-78 Damp heat, cyclic, to IEC 60068-2-30
Degree of Protection			IP66, IP67, IP69K (front) IP65 (on rear)
Mounting position			As required
Mechanical shock resistance, shock duration 11 ms		g	> 30

Contacts

Rated impulse withstand voltage	U_{imp}	V AC	4000
Rated insulation voltage	U_i	V	250
Overvoltage category/pollution degree			III/3
Control circuit reliability			
At 17 V DC/7 mA	H_F		N/C contact: statistically determined 1 failure per 0.9 × 10^6 Operations
Max. short-circuit protective device			
Fuse	gG/gL	A	4
Rated conditional short-circuit current	Iq	kA	1

Switching capacity

Rated operational current	I_e	A	
AC-15			
24 V	I_e	A	4
DC-13			
24 V	I_e	A	3
Cable characteristics			
Design			M12A
Cable Length		m	1
Material characteristic			PUR
Diameter	∅	mm	4.7

Design verification as per IEC/EN 61439

Technical data for design verification			
Operating ambient temperature min.		°C	-25
Operating ambient temperature max.		°C	70

Approvals

Product Standards			IEC/EN 60947-5-1; UL 508; CAN/CSA-C22.2 No. 14-05 und 94-M91; CE marking
UL File No.			E29184
UL Category Control No.			NKCR
CSA File No.			165628
CSA Class No.			321103
North America Certification			UL listed, CSA certified

Degree of Protection	1,3R,4X,12,13

Dimensions

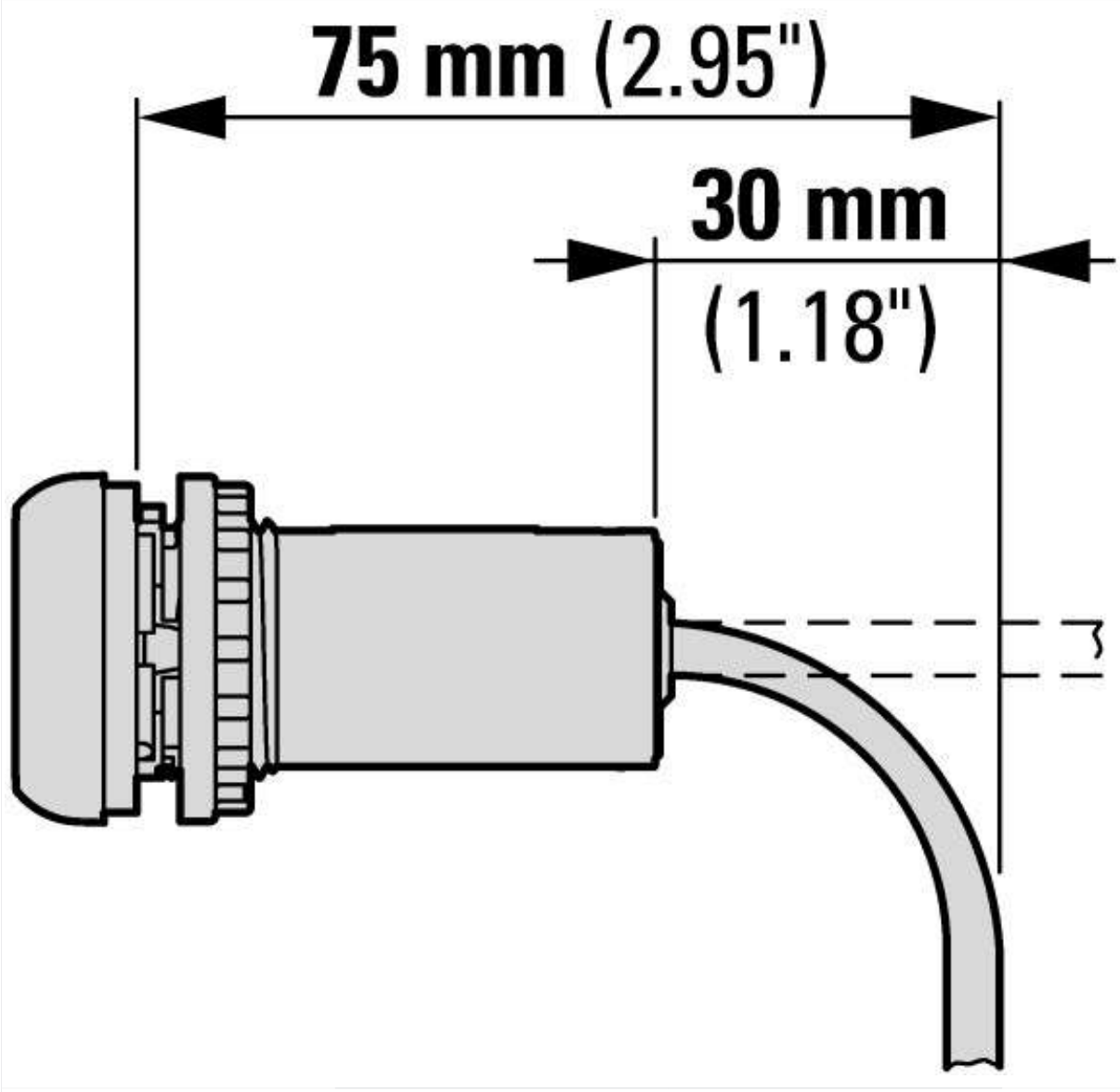

Static: Fixed routing

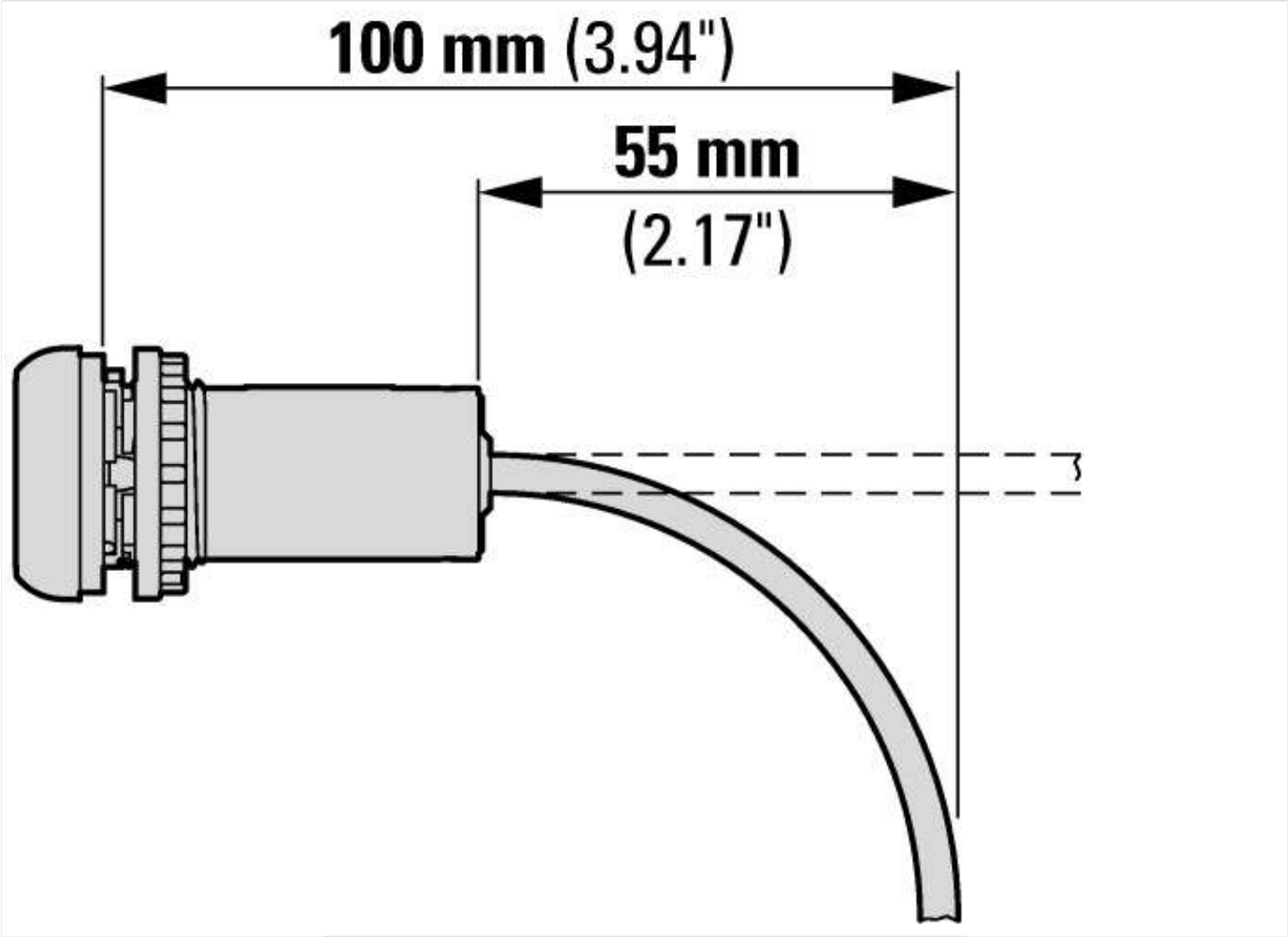

Flexible use

Additional product information (links)

IL047016ZU RMQ compact solution	
IL047016ZU RMQ compact solution	ftp://ftp.moeller.net/DOCUMENTATION/AWA_INSTRUCTIONS/IL047016ZU2016_05.pdf

© 07/2016 by Eaton Industries GmbH