RG-Series

Single/Double Pole Rocker & Paddle Switches

The double pole version of the R-Series incorporates the same sleek lines as the original Curvette, in a double pole envelope. Features include silver-plated butt-action contacts which afford ratings to 20A/125, 15A 250VAC and withstand peak inrush currents up to 100 amps. Paddle or rocker actuators and a choice of solder lug, .250 Tab and wire lead terminations enable this switch to adapt to high current applications within the Power Supply, Appliance, Exercise Equipment and Music Equipment Industries.





Carling Technologies®
Innovative Designs. Powerful Solutions.

Carling Technologies, Inc.
60 Johnson Avenue • Plainville, CT 06062-1177
Phone: (860) 793-9281 • Fax: (860) 793-9231
Email: sales@carlingtech.com • www.carlingtech.com

Dielectric Strength

UL/CSA:
1000V - live to dead metal parts & opposite polarity
VDE:
4000V - live to dead metal parts;
1250V - opposite polarity & across open contacts

Electrical Life

50,000 cycles

Mechanical Life

100,000 cycles

Operating Temperature

-40°F to 185°F (-40°C to 85°C)

RGSCA901 - R - B - B - A

1 Base Part Number | 2 Actuator Style | 3 Actuator Color | 4 Bezel Color | 5 Rocker Legend

1 BASE PART NUMBER: SERIES/CIRCUITRY/RATING[1]/TERMINATION

15A 250 VAC, 20A 125 VAC, 3/4 HP 125-250 VAC, 14(6)A 250 VAC

	Solder Lugs	.250 Tabs	Wire Leads
Standard Base			
OFF-NONE-ON (Single Pole)	**RGSCA900**	**RGSCA901**	**RGSCA905**
ON-NONE-ON (Single Pole)	**RGSCB900**	**RGSCB901**	**RGSCB905**
OFF-NONE-ON (Double Pole)	**RGSCC900**	**RGSCC901**	**RGSCC905**
ON-NONE-ON (Double Pole)	**RGSCD900**	**RGSCD901**	**RGSCD905**
European Base (22 x 30 mm cutout)			
OFF-NONE-ON (Single Pole)	**RGSEA900**	**RGSEA901**	**RGSEA905**
ON-NONE-ON (Single Pole)	**RGSEB900**	**RGSEB901**	**RGSEB905**
OFF-NONE-ON (Double Pole)	**RGSEC900**	**RGSEC901**	**RGSEC905**
ON-NONE-ON (Double Pole)	**RGSED900**	**RGSED901**	**RGSED905**

2 ACTUATOR STYLE

P	Paddle	**R**	Rocker

3 ACTUATOR COLOR[1]

B	Black	**W**	White

4 BEZEL COLOR[1]

B	Black	**W**	White

5 ROCKER LEGEND

	hot stamp
NO LEGEND	**0**
OFF-ON vertical	**A**
OFF-ON horizontal	**B**
I-O horizontal	**D**
I-O vertical	**E**
Dual OFF-ON, I-O vertical	**H**
Dual OFF-ON, I-O horizontal	**J**

Notes:
1 Additional ratings and colors available. Consult factory.

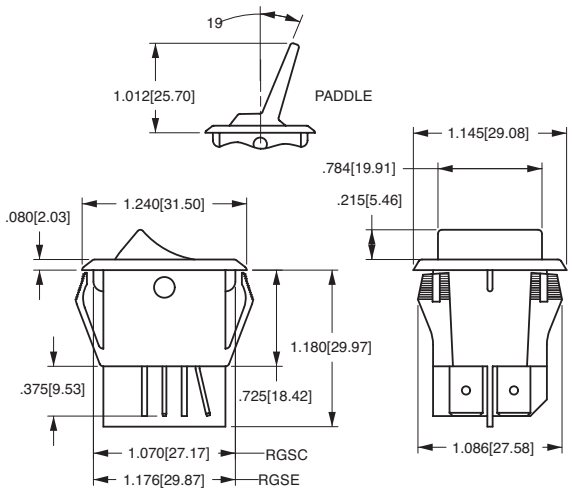

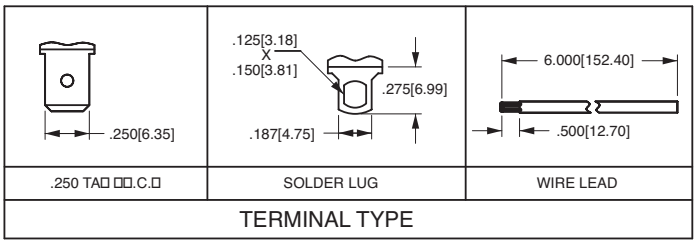

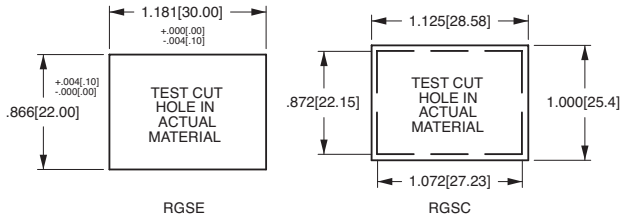

MOUNTING HOLE
Panel Thickness: .025 min - .187 max.
Specific cutout dimension range dependent on panel thickness and material.

*Manufacturer reserves the right to change product specification without prior notice.

REV_SW_RG_0912

60 Johnson Avenue • Plainville, CT 06062–1177 • Phone: (860) 793–9281 • Fax: (860) 793–9231
Email: sales@carlingtech.com • www.carlingtech.com