BFK3200A400

CONTACTOR FOR POWER FACTOR CORRECTION WITH AC CONTROL CIRCUIT, BFK TYPE (INCLUDING LIMITING RESISTORS), MAXIMUM IEC OPERATIONAL POWER 400V = 25KVAR, 400VAC 50/60HZ



Product designation			Power contactor
Product type designation			BFK32
Contact characteristics			
Number of poles		nr.	3
Rated insulation voltage Ui		V	690
Rated impulse withstand voltage Uimp		kV	6
Operating frequency			
	Operational frequency min	Hz	25
	Operational frequency max	Hz	400
Conventional free air thermal current Ith		A	56
Operating current			
	Operational current AC3 (≤440V ≤55°C)	A	32
	Operational current AC4 (400V)	A	13.5
Short-time allowable current for 10s (IEC/EN60947-1)		A	320
Protection fuse			
	gG (IEC)	A	63
	aM (IEC)	A	32
Making capacity (RMS value)		A	320
Breaking capacity at voltage			
	Breaking capacity 440V	A	256
	Breaking capacity 500V	A	240
	Breaking capacity 690V	A	192
Resistance per pole (average value)		mΩ	2
Power dissipation per pole (average value)			
	Power dissipation pole (average value) Ith	W	6
	AC3	W	2
Tightening torque for terminals			
	min	Nm	2.5
	max	Nm	3
	min	lbft	1.8
	max	lbft	2.2
Tightening torque for coil terminal			
	min	Nm	0.8
	max	Nm	1
	min	lbft	0.59
	max	lbft	0.74
max number of wires simultaneously connectable		nr.	2
Conductor section			
AWG			
	min		14
	max		6
Flexible w/o lug conductor section			
	min	mm²	2.5
	max	mm²	16
Flexible c/w lug conductor section			

The characteristics described in this document are subject to updates or modifications at any time. The descriptions, technical and functional information, illustrations and instructions in this brochure are purely illustrative, and are consequently not contractually binding

BFK3200A400

CONTACTOR FOR POWER FACTOR CORRECTION WITH AC CONTROL CIRCUIT, BFK TYPE (INCLUDING LIMITING RESISTORS), MAXIMUM IEC OPERATIONAL POWER 400V = 25KVAR, 400VAC 50/60HZ

		min	mm²	1
		max	mm²	10
	Flexible with insulated spade lug conductor section			
		min	mm²	1
		max	mm²	10
Power terminal protection according to IEC/EN 60529				IP20
Ambient conditions				
Temperature				
	Operating temperature			
		min	°C	-50
		max	°C	70
	Storage temperature			
		min	°C	-60
		max	°C	80
Max altitude			m	3,000
Operating position				
		normal		Vertical plan
		allowable		±30°
Mounting				Screw / DIN rail 35mm
Weight			g	0.432
Operations				
Mechanical life			Cycles	20,000,000
Electrical life			Cycles	1600000
Safety related data				
Mirror contats according to IEC/EN 609474-4-1				Yes
EMC compatibility				Yes
AC coil operating				
Rated AC voltage at 50/60Hz, 60Hz				
		min	V	12
		max	V	600
AC operating voltage				
	of 50/60Hz coil powered at 50Hz			
	pick-up			
		min	%Us	80
		max	%Us	110
	drop-out			
		min	%Us	20
		max	%Us	55
	of 50/60Hz coil powered at 60Hz			
	pick-up			
		min	%Us	85
		max	%Us	110
	drop-out			
		min	%Us	40
		max	%Us	55
	of 60Hz coil powered at 60Hz			
	pick-up			
		min	%Us	80
		max	%Us	110
	drop-out			
		min	%Us	20
		max	%Us	55
AC operating voltage				

The characteristics described in this document are subject to updates or modifications at any time. The descriptions, technical and functional information, illustrations and instructions in this brochure are purely illustrative, and are consequently not contractually binding

of 50/60Hz coil powered at 50Hz				
		in-rush	VA	75
		holding	VA	9
of 50/60Hz coil powered at 60Hz				
		in-rush	VA	70
		holding	VA	6.5
of 60Hz coil powered at 60Hz				
		in-rush	VA	75
		holding	VA	9
Dissipation at holding ≤20°C 50Hz			W	2.5
Max cycles frequency				
Mechanical operations			Cycles/h	3,600
Operating times				
Average time for Us control				
in AC				
	Closing NO			
		min	ms	8
		max	ms	24
	Opening NO			
		min	ms	5
		max	ms	15
	Closing NC			
		min	ms	9
		max	ms	20
	Opening NC			
		min	ms	9
		max	ms	17
in DC				
	Closing NO			
		min	ms	53
		max	ms	65
	Opening NO			
		min	ms	14
		max	ms	18
	Closing NC			
		min	ms	23
		max	ms	28
	Opening NC			
		min	ms	46
		max	ms	56
UL technical data				
Full-load current (FLA) for three-phase AC motor				
		at 480V	A	27
		at 600V	A	27
Yielded mechanical performance				
for single-phase AC motor				
		at 110/120V	hp	3
		at 230V	hp	7.5
for three-phase AC motor				
		at 200/208V	hp	10
		at 220/230V	hp	10
		at 460/480V	hp	20
		at 575/600V	hp	25
Contact rating of auxiliary contacts according to UL				SI - A600

The characteristics described in this document are subject to updates or modifications at any time. The descriptions, technical and functional information, illustrations and instructions in this brochure are purely illustrative, and are consequently not contractually binding

General USE

Contactor			
	AC current	A	32
Auxiliary contacts			
	AC voltage	V	600
	AC current	A	10
	DC voltage	V	250
	DC current	A	1

Dimensions

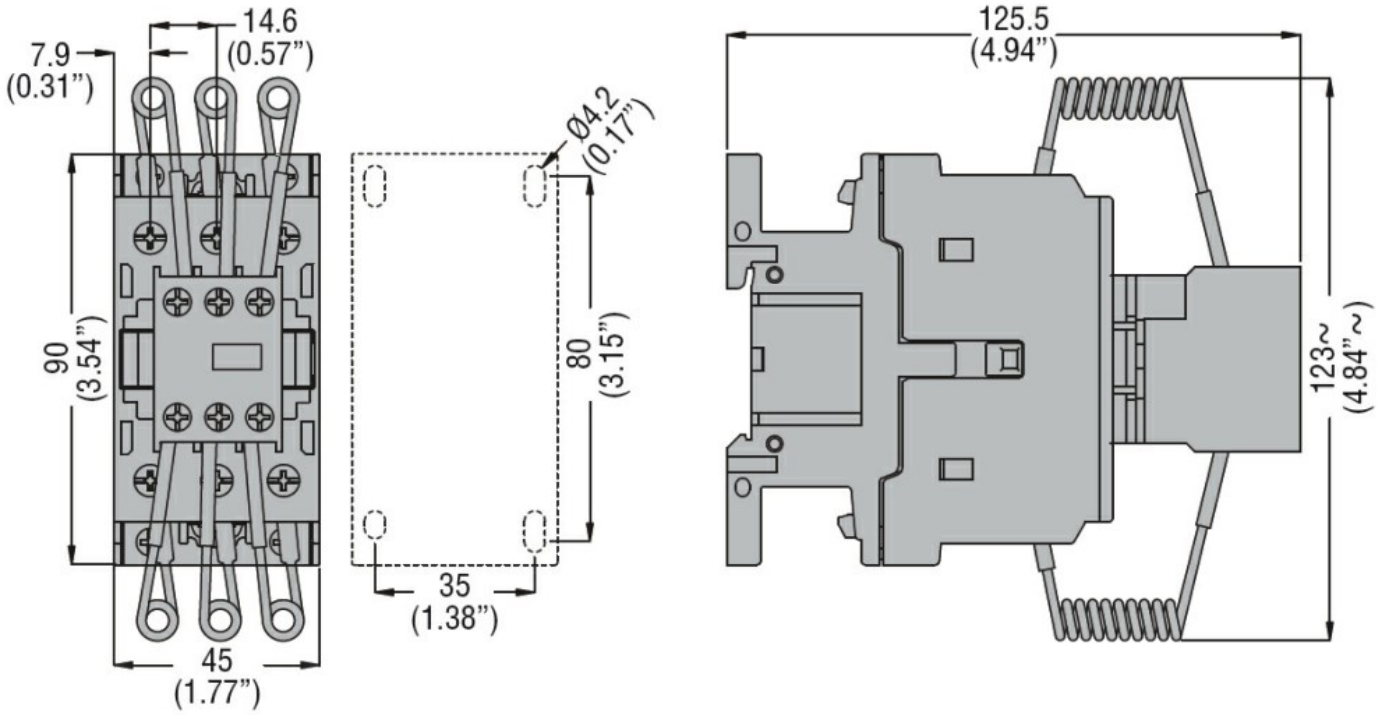

Wiring diagrams

The characteristics described in this document are subject to updates or modifications at any time. The descriptions, technical and functional information, illustrations and instructions in this brochure are purely illustrative, and are consequently not contractually binding

BFK3200A400

CONTACTOR FOR POWER FACTOR CORRECTION WITH AC CONTROL CIRCUIT, BFK TYPE (INCLUDING LIMITING RESISTORS), MAXIMUM IEC OPERATIONAL POWER 400V = 25KVAR, 400VAC 50/60HZ

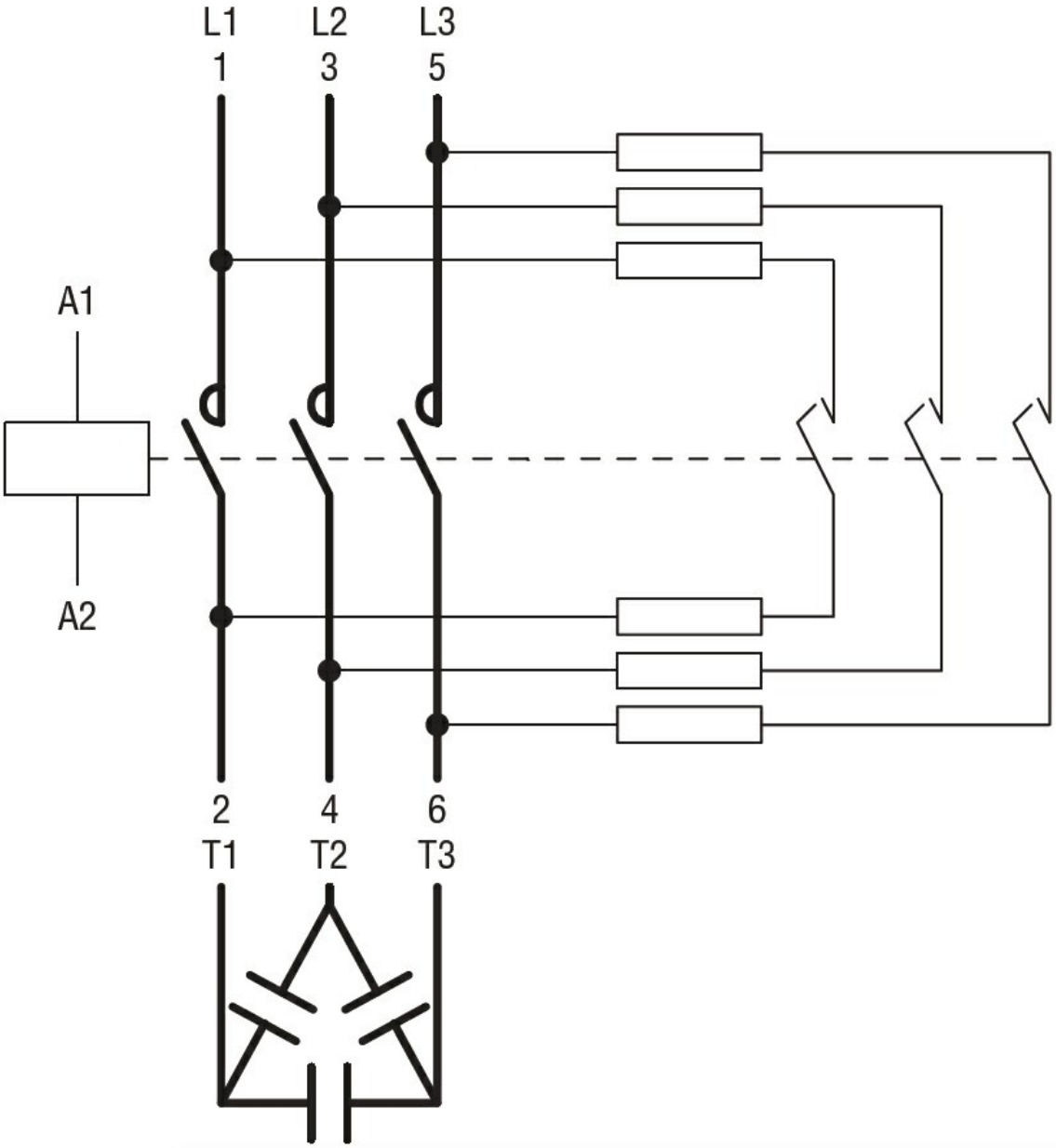

Certifications and compliance

Certifications

CSA C22.2 n° 60947-1
CSA C22.2 n° 60947-4-1
IEC/EN 60947-1
IEC/EN 60947-4-1
UL 60947-1
UL 60947-4-1

Compliance

CCC
cULus
EAC

ETIM 6 classification

EC000066 - Power contactor, AC switching

The characteristics described in this document are subject to updates or modifications at any time. The descriptions, technical and functional information, illustrations and instructions in this brochure are purely illustrative, and are consequently not contractually binding