

CONNECT AND PROTECT

Plug-in Units

08/2022

nVent
SCHROFF

OVERVIEW

MAIN KATALOG

Cabinets 1

Wall mounted cases 2

Accessories for cabinets and wall mounted cases . . 3

Climate control . . 4

Electronics cases 5

Subracks/ 19" chassis 6

Front panels, plug-in units 7

Systems 8

Power supply units 9

Backplanes 10

Connectors, front panel component system 11

Appendix 12

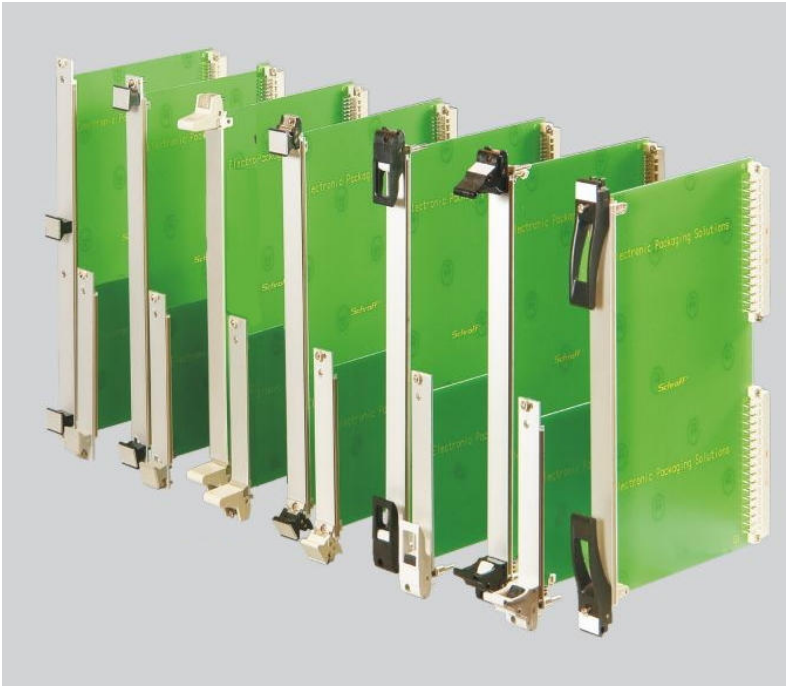

PLUG-IN UNITS AS KITS OR FROM INDIVIDUAL PARTS

- Handles in different designs for various applications
- Inserter/extractor handles for forces up to 1500 N
- Upgradable EMC shielding

STANDARDS

- IEC 60297-3-101 / IEEE 1101.1/11
  IEC 60297-3-102 / IEEE 1101.10
  IEC 60297-3-103
  IEC 1296

WHICH HANDLE FOR WHICH OPEN STANDARD / CONNECTOR?

Standard	Connector	Picture of the connector	Qty of pins	Force	Picture handle	Suggested handle (PIU with handle)
VME	DIN connector conform with IEC 60603-2 (DIN 41612)		192	~ 180N		Static trapezoid handle, Type 1 and Type2
VME64x	DIN connector conform with IEC 60603-2 (DIN 41612)	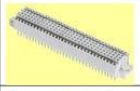	415	~ 420N		Type IEL / IET
CompactPCI	Connector conform with IEC 61076-4-101 (Hard metric)		535	~ 610N		Type IEL / IET
CompactPCI Serial (CPCI-S.0)	Connector conform with CPCI-S.0 (Airmax VS)		1.128	~ 550N		Type IEL / IET
VXS	Connector conform with VITA 41 (Tyco MultiGig RT)		1.664	~ 1.250N		Type IEL / IET or XL
VPX	Connector conform with VITA 46 (Tyco MultiGig RT)		1.664	~ 1.250N		Type IEL / IET or XL

Remark: 6U board with two handles

SERVICEPLUS

e.g. individual configuration and assembly
e.g. modifications (special colours or sizes)
e.g. custom solutions with modification to the plug-in units

Handles for plug-in units		Kit Page	Individual components Page
 	**For CompactPCI and VME64x applications** Inserter/extractor handle, type IEL/IET, allows keying/ coding and insertion/extraction forces up to 700 N per pair	7.18	7.24
	**For FMC and PMC Mezzanine** Inserter/extractor handle, type IEL, allows keying/ coding and insertion/extraction forces up to 700 N per pair	7.20	
	**For VPX, VXS, CompactPCI and VME64x applications** Inserter/extractor handle, type XL, allows keying/ coding and insertion/extraction forces up to 1500 N per pair	7.34	7.35
 	**For e.g. VMEbus applications** Trapeziform extractor handle, type 2, up to 250 N/pair	7.37	7.39
 	**For e.g. VMEbus applications** Trapeziform extractor handle, type 1	7.44	7.51
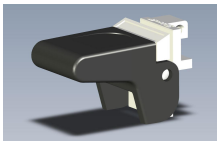	**For plug-in units in accordance with IEC 60297** Extractor handle in key form 1	7.50	
 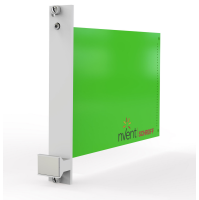	**For plug-in units in accordance with IEC 60297** Static handle	7.54	7.58
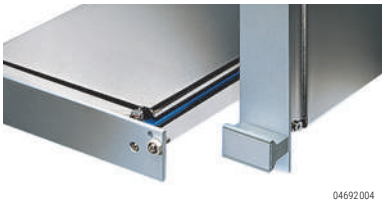 04692004	**Accessories for plug-in units** Mechanical protection for static trapeziform handle and fixing materials kit	7.63	–

Overview 7.17
Plug-in units with injector and extractor handles

For CompactPCI and VME64x applications **7.18**

For FMC and PMC applications **7.20** **7.22**

For VPX, VXS, CompactPCI and VME64x applications 7.34

For e.g. VMEbus applications type 2 . . . . . **7.37**

For e.g. VMEbus applications type 1 . . . . . **7.44**

For plug-in units in accordance with IEC 60297 . . . **7.50**

For plug-in units in accordance with IEC 60297 . . . **7.54**

Accessories for plug-in units **7.63**

PCB cover **7.66**

KITS

PLUG-IN UNITS WITH IEL INSERTER/EXTRACTOR HANDLE FOR COMPACTPCI/VME64X APPLICATIONS



3U, Front Assembly



3U, Rear I / O

Remark: Delivery do not include the PCB

- In accordance with IEEE 1101.10 and IEC 60297-3-102
- Codable to IEC 60297-3-103/ IEEE 1101.10
- Front panel shielded
- Suitable for insertion and extraction forces up to 700 N (per pair)
- Suitable for fitting microswitches
- **Plastic** Material:
  UL 94 V0, EN 45545-2, R22 - R24, HL3

DELIVERY COMPRISES (kit)

Item	Qty 3 U <8HP	Qty 3 U ≥8HP	Qty 6 U <8HP	Qty 6 U ≥8HP	Description
1	1	1	1	1	Front panel (U profile), Al, front anodised, rear conductive
2	1	1	1	1	EMC sealing (textile), core: foam, sleeve: textile cladding, CuNi coated
3	1	1	2	2	Handle with integrated alignment pin for perforated strips and guide rails, lever: plastic, PC, black, RAL 9005 key: plastic, PC, light grey, RAL 7035
4	1	1	-	-	Board support, die-cast zinc
5	1	1	-	-	Raised Pozidrive countersunk screw M2.5 × 8, St, nickel-plated
6	1	3	-	2	Sleeve, PA, grey
7	2	4	2	4	Pozidrive collar screw, M2.5 × 12.3, St, nickel-plated
8	2	2	2	2	Panhead screw with Torx/slot, M2.5 × 6, St, zinc-plated, self-locking
9	2	2	2	2	Washer A2.7, DIN 125, St, nickel-plated
10	1	1	2	2	Panhead screw with Torx, M2.5 × 7, St, nickel-plated

3U

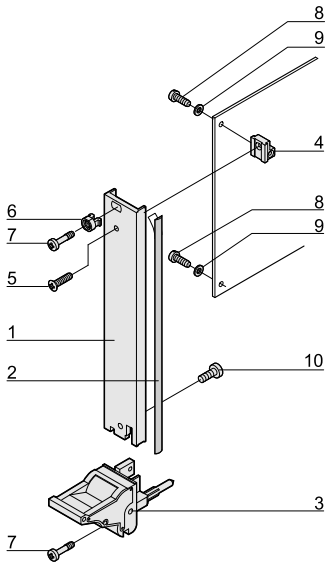

04602073

6 U

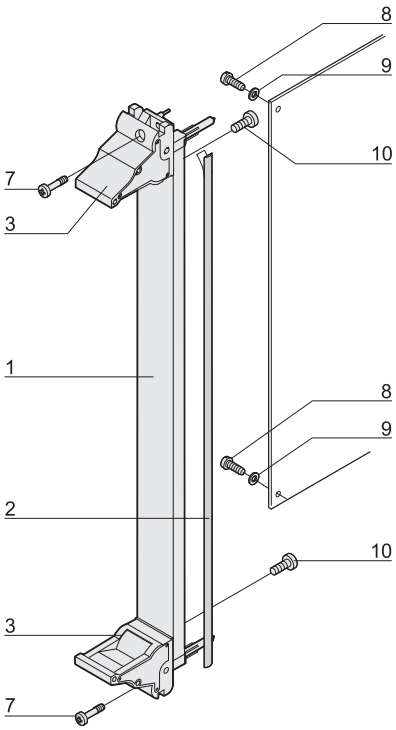

04602074

ORDER INFORMATION

Width HP	Part no. Rear I/O	Part no. Front assembly
3 U Height		
4	**20848-751**	**20848-585**
6	**-**	**20848-587**
8	**20848-752**	**20848-589**
10	**-**	**20848-590**
12	**-**	**20848-591**
6 U Height		
4	**-**	**20848-592**
6	**-**	**20848-594**
8	**-**	**20848-596**
10	**-**	**20848-597**
12	**-**	**20848-598**
Accessories		
Microswitch for handles, CompactPCI/VME64x application PU 10 pieces		**20817-606**

- Dimension drawing of front profile see page 7.30
- Description of microswitch see page 7.35

Plug-in units – for CompactPCI, VME64x

KITS

PLUG-IN UNITS WITH IET INSERTION/EXTRACTOR HANDLE FOR COMPACTPCI/VME64X APPLICATIONS



3U, Front

- Suitable for insertion and extraction forces up to 700 N (per pair)
- Version for telecoms applications
- To IEEE 1101.10 and IEC 60297-3-102
- Codable to IEC 60297-3-103/ IEEE 1101.10
- Front panel, shielded (3 U, 6 HP)
- designed for fitting of microswitches
- Online download of 3D CAD data
- **Plastic** Material:
  UL 94 V0, EN 45545-2, R22 - R24, HL3

3 U

Remark: Delivery do not include the PCB

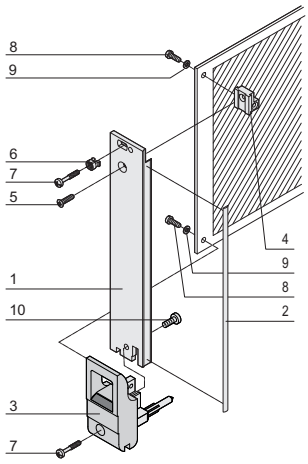

< 8 HP

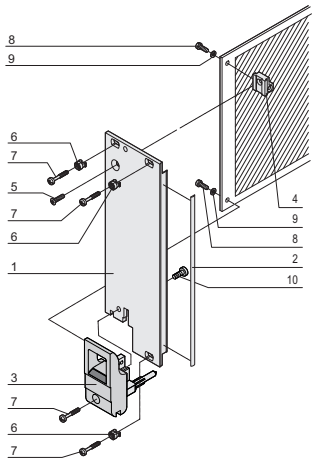

04613051

04613052

≥8 HP

6 U

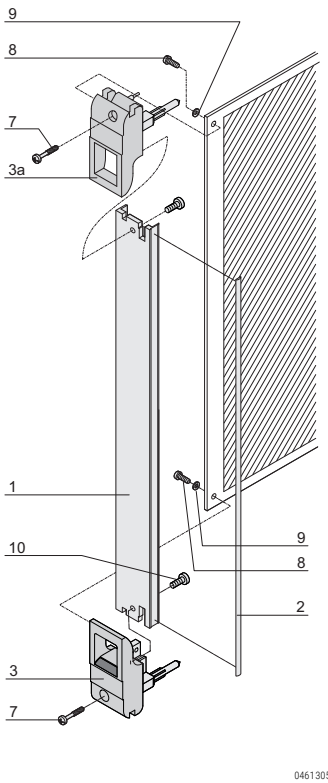

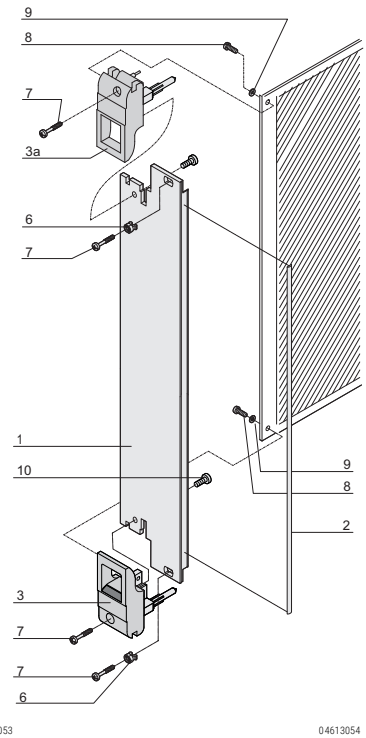

04613053

04613054

< 8 HP

≥8 HP

DELIVERY INCLUDES (Kit)

Item	Qty 3 U <8 HP	Qty 3 U ≥8 HP	Qty 6 U <8 HP	Qty 6 U ≥8 HP	Description
1	1	1	1	1	Front panel (U profile), Al, front anodized, rear conductive
2	1	1	1	1	EMC sealing (textile), core: foam, sleeve: textile cladding, CuNi coated
3	1	1	2	2	Handle with integrated alignment pin for perforated strips and guide rails, lever: plastic, PC, black, RAL 9005 Key: Plastic, PC, light gray, RAL 7035
4	1	1	-	-	Board support, die-cast zinc
5	1	1	-	-	Raised Pozidrive countersunk screw M2.5 × 8, St, nickel-plated
6	1	3	-	2	Sleeve, PA, gray
7	2	4	2	4	Pozidrive collar screw, M2.5 × 12.3, St, nickel-plated
8	2	2	2	2	Panhead screw with Torx/slot, M2.5 × 6, St, zinc-plated, self-locking
9	2	2	2	2	Washer A2.7, DIN 125, St, nickel-plated
10	1	1	2	2	Panhead screw with Torx, M2.5 × 7, St, nickel-plated

ORDER INFORMATION

Width HP	Part no.
3 U Height	
4	**20848-763**
8	**20848-764**
12	**20848-765**
6 U Height	
4	**20848-766**
8	**20848-767**
12	**20848-768**
Accessories	
Coding peg, PC, UL 94 V-0, grey, RAL 7035 PU 100 pieces	**20817-501**
Microswitch for handles, CompactPCI/VME64x application PU 10 pieces	**20817-606**

- For description of coding peg and microswitch see page 7.23
- Description of microswitch see page 7.31

Part number in bold face type: ready for despatch within 2 working days
Part number in normal type: ready for despatch within 10 working days

PMC MEZZANINE FRONT PANELS

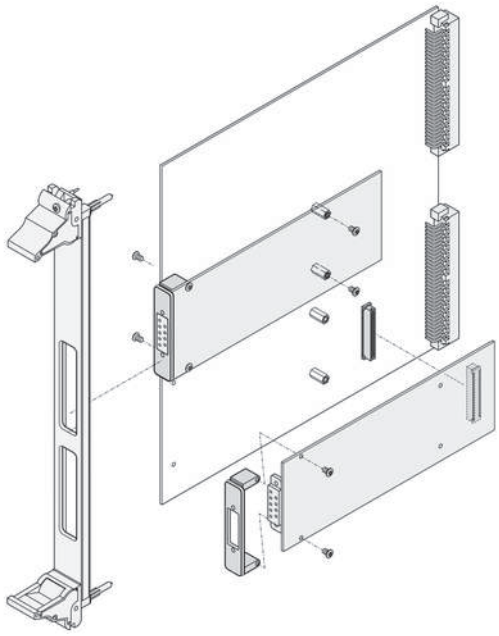

04621050

- PMC = PCI Mezzanine Card
- For standard defined I/O mezzanine modules which connect to carrier cards
- For Single-Module 69.0 x 76.5 mm or Double-Module 139.0 x 76.5 mm modules
- In accordance with IEEE 1386.1 Spezification

PMC MEZZANINE FRONT PANEL KIT, SHIELDED, WITH IEL HANDLE



Remark: Delivery do not include the PCB

- 3 U or 6 U, 4 HP, U-shaped front panels with textile gasketing
- 1 or 2 PMC cutouts (depending on height)
- 1 or 2 IEL-handle (depending on height)
- EMC shielded, both the front panel and the FMC bezels
- **Plastic** Material: UL 94 V0, EN 45545-2, R22 - R24, HL3

DELIVERY INCLUDES (assembled)

Item	Qty 3 HE	Qty 6 HE	Description
1	1	1	PMC front panel, U profile, Al, 4 HP, front anodized, rear conductive, 3 U has 1 cut out, 6 U has 2 cut outs
2	1	1	EMC textile gasket for front panel
3	1	2	IEL handle (handel, black, RAL 9005; button, light grey, RAL 7035)
4	1	2	PMC bezel for front panel cut outs
5	1	2	EMC gasket (O-ring)
6	1	1	Assembly kit

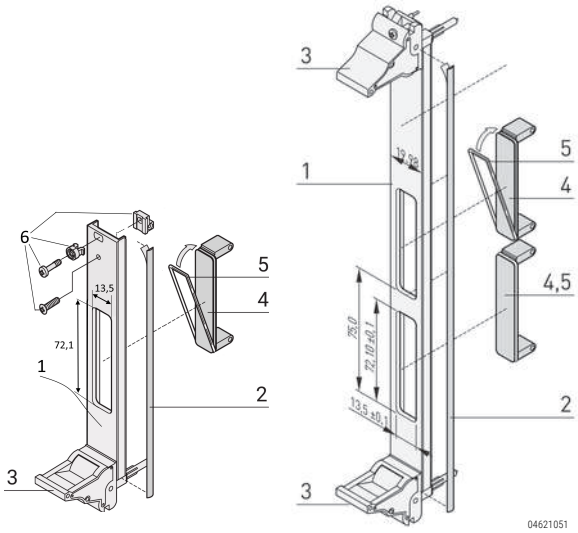

04621051

ORDER INFORMATION

Height U	Part no.
3	**20836-460**
6	**20836-461**
Accessories	
Spacer to mount PMC mezzanine boards	see page 7.23

PMC CUTOUT COVER FOR EMC PROTECTION

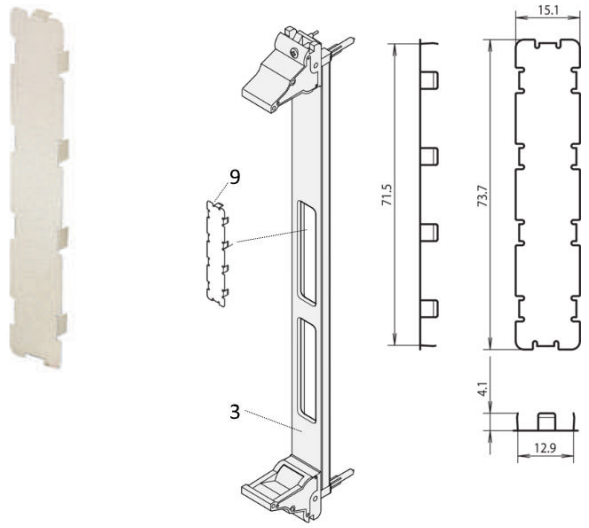

04610028

Item 9: EMC cover; Item 3: front panel

- EMC cover to close unused cut-outs in the PMC mezzanine front panels
- Material stainless steel, 0.2 mm
- Colour: black or bright

ORDER INFORMATION

Colour	Qty	Part no.
Black	1 piece (SPQ 10)	**60835-024**
Bright	1 piece (SPQ 10)	**60835-022**

Delivery is exclusively made in Standard Pack Quantity (SPQ): Please order at least 10 pieces or a multiple.
Pricing is per individual item.

PMC BEZEL FOR MEZZANINE FRONT PANELS

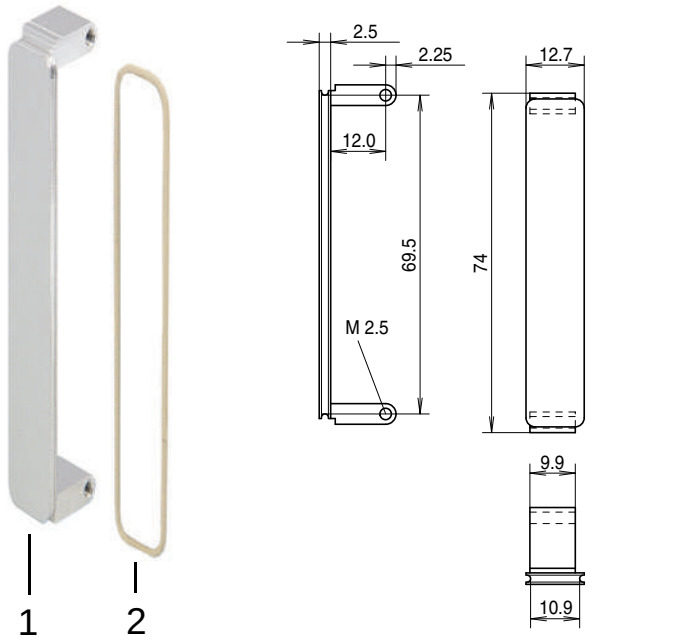

04610029 mpa44846

- Mezzanine front panel is fitted into PMC front panel cut-outs; EMC shielding with conductive O-ring
- Material:
  - Aluminium extrusion (anodised, contact surfaces conductive)

DELIVERY COMPRISES (kit)

Item	Qty	Description
1	1	PMC bezel for mezzanine front panel, Al extrusion
2	1	EMC gasket (O-ring), Cho-Seal

ORDER INFORMATION

PMC mezzaninefront panel Material	Qty/PU	**with** EMC gasket Part no.	**without** EMC gasket Part no.
Al extrusion, anodised, contact surfaces conductive	1	**20835-598**	**–**
Al extrusion, anodised, contact surfaces conductive	10	**20835-889**	**20835-899**
EMC gasket O-ring, 1 piece (Standard Pack Quantity 10 pieces)			**60835-021**
Cheese head screw M2.5 x 5 mm, PU 100 pieces			**21100-624**

FMC MEZZANINE FRONT PANELS

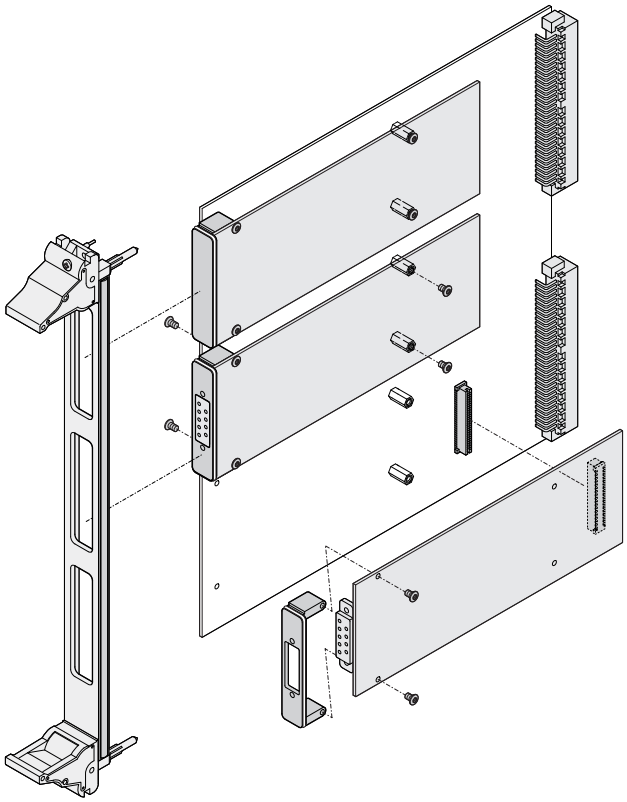

04615052

- FMC = FPGA mezzanine card
- For standard defined I/O mezzanine modules which connect to carrier cards
- For single 69.0 x 76.5 mm or
  double 139.0 x 76.5 mm modules
- In accordance with Vita 57.1 specification

FMC MEZZANINE FRONT PANEL KIT, SHIELDED, WITH IEL HANDLE



Remark: Delivery do not include the PCB

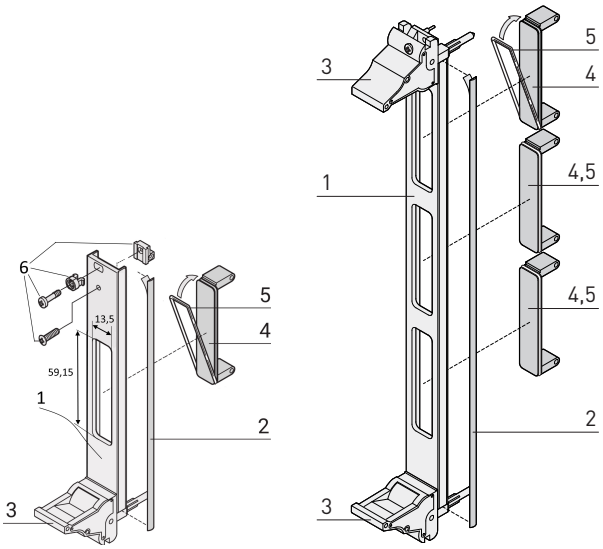

04615050

- 3 U or 6 U, 4 HP, U-shaped front panels with textile gasketing
- 1 or 3 FMC cutouts (depending on height)
- 1 or 2 IEL front handles (depending on height)
- EMC shielded, both the front panel and the FMC bezels
- **Plastic** Material:
  UL 94 V0, EN 45545-2, R22 - R24, HL3

DELIVERY INCLUDES (assembled)

Item	Qty 3 U	Qty 6 U	Description
1	1	1	FMC front panel, U profile, Al, 4 HP, front anodized, rear conductive, 3 U has 1 cut out, 6 U has 3 cut outs
2	1	1	EMC textile gasket for front panel
3	1	2	IEL handle (handel, black, RAL 9005; button, light grey, RAL 7035)
4	1	3	FMC bezel for front panel cut outs
5	1	3	EMC gasket (O-ring)
6	1	1	Assembly kit

ORDER INFORMATION

Height U	Part no.
3	20836-253
6	20836-254
Accessories	
Spacer to mount PMC mezzanine boards	see page 7.23

Assemblies – for CompactPCI, VME64x

EMC BEZEL FOR FMC MEZZANINE FRONT PANEL CUT-OUTS

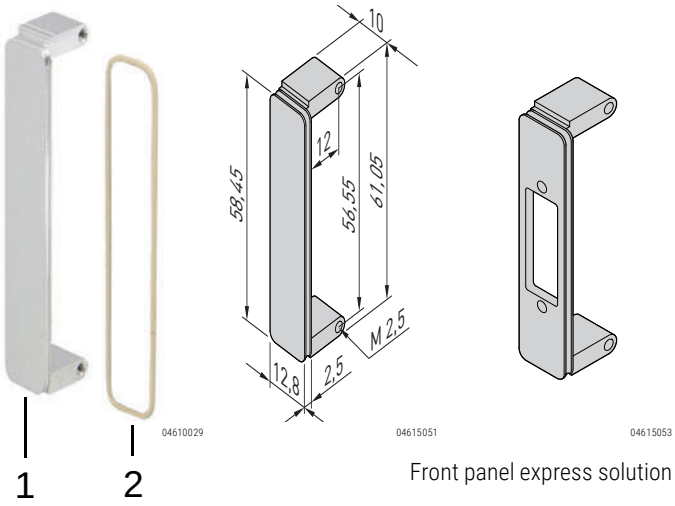

Front panel express solution

- FMC bezel is fitted into FMC Mezzanine front panel cut-outs
- Material, Al extrusion (anodised, contact surface conductive)
- Shielding for FMC bezels with an optional conductive O-ring, please order separately

ORDER INFORMATION

Description	Item	Qty/PU piece	Part no.
EMC bezel for FMC Mezzanine front panel cut outs	1	10	20835-849
Accessories			
EMC gasket for mezzanine front panel item O-ring, (VITA 57.1), (standard pack quantity 10 pieces)	2,	1	**60835-077**
Cheese head screw M2.5 x 5 mm, PU 100 pieces			**21100-624**

SPACER TO MOUNT PMC AND FMC MEZZANINE BOARDS

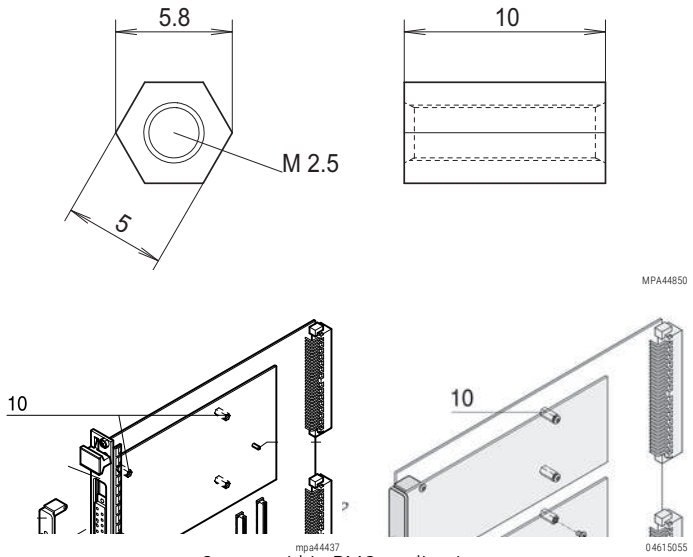

Spacer within PMC application

- To provide a standoff between mezzanine boards per the IEEE P1386 or VITA 57.1 specification and the carrier card

ORDER INFORMATION

Description	Item	Material	Qty	Part no.
Spacer	10	St, Stainless	1 piece (SPQ 10)	**60897-278**

Delivery is exclusively made in Standard Pack Quantity (SPQ): Please order at least 10 pieces or a multiple.
Pricing is per individual item.

VOLTAGE KEYING/CODING PIN FOR PMC MEZZANINE BOARDS

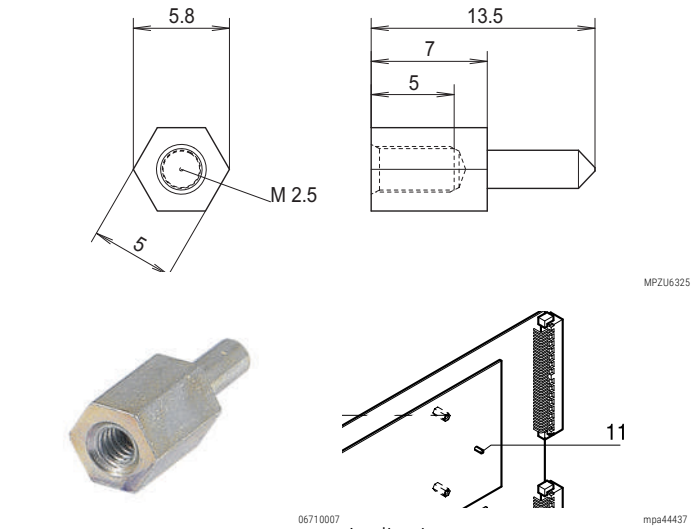

Application

- To prevent accidental damage when fitting mezzanine boards, keying/coding pins are bolted to the VMEbus boards to distinguish between 3.3 V and 5 V operation. The mezzanine boards have a hole drilled in the appropriate position. The keying/coding pin thus ensures that only mezzanine boards with the same operating voltage can be inserted. For double-height euroboards 2 pieces are required.

ORDER INFORMATION

Description	Item	Material	Qty	Part no.
Keying/ coding pin 5 V/3.3 V	11	St, Stainless	1 piece (SPQ 10)	**60827-026**

Delivery is exclusively made in Standard Pack Quantity (SPQ): Please order at least 10 pieces or a multiple.
Pricing is per individual item.

Part number in bold face type: ready for shipping within 2 working days
Part number in normal type: ready for shipping within 10 working days

ORDER INFORMATION

		Front panel, U profile, shieldable			Textile EMC gasket		Front panel, flat, unshielded, front mounting
		Front mounting	Front mounting, PCB fixing with 0.1" offset	Rear I/O mounting			
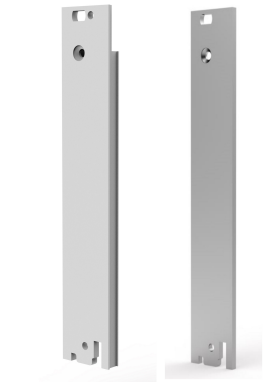 U-Profile Front panel Flat Front panel		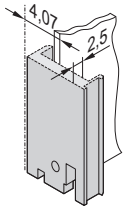 04608060	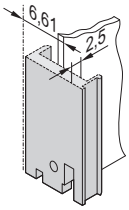 04608062	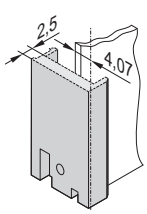 04608061	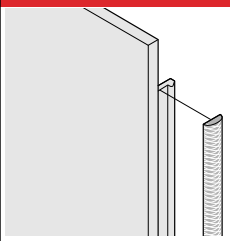 BGA45760		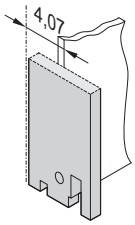 04608063
		Al extrusion, 2.5 mm, front anodised, rear conductive; alignment pin pressed-in (3 U only), stainless steel; manufacturing process causes various surface structures to appear between 4 to 12 HP and 14 to 16 HP			always fixed laterally on the front panel, in the groove of the profile, textile gasket, core: foam, sleeve: textile cladding with CuNi coating, UL 94 V-0, temperature range -40 ... 70 °C		front panel, Al, 2.5 mm, front anodised, rear irisdescent green chromated
		1 piece (SPQ 5)[1]	1 piece (SPQ 5)[1]	1 piece (SPQ 5)[1]	PU 10 pieces	PU 100 pieces	1 piece (SPQ 5)[1]
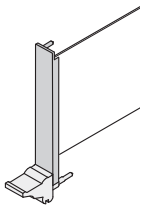 04608067		**3 U Height**					
	4	**30848-312**	**30848-426**	**30848-867**			**30848-327**
	5	**30848-300**	**30848-427**	–			**30848-328**
	6	**30848-313**	**30848-428**	–			**30848-329**
	7	**30848-301**	**30848-429**	–			**30848-330**
	8	**30848-314**	**30848-430**	**30848-869**			**30848-331**
	9	**30848-299**	–	–	**21101-853**	**21101-854**	–
	10	**30848-315**	**30848-431**	–			**30848-333**
	11	**20848-228**	–	–			–
	12	**30848-316**	**30848-432**	**30848-985**			**30848-335**
	14	**20848-230**	–	–			–
	16	**20848-232**	–	–			–
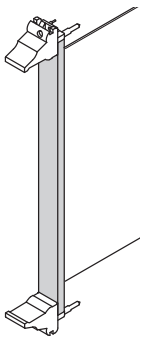 04608066		**6 U Height**					
	4	**30848-317**	**30848-317**	**30848-317**			**30848-336**
	5	**30848-304**	**30848-304**	**30848-304**			**30848-337**
	6	**30848-318**	**30848-318**	**30848-318**			**30848-338**
	7	**30848-305**	**30848-305**	**30848-305**			**30848-339**
	8	**30848-319**	**30848-319**	**30848-319**			**30848-340**
	9	**30848-999**	**30848-999**	**30848-999**	**21101-855**	**21101-856**	–
	10	**30848-320**	**30848-320**	**30848-320**			**30848-342**
	11	**20848-244**	**20848-244**	**20848-244**			–
	12	**30848-321**	**30848-321**	**30848-321**			**30848-344**
	14	**20848-246**	**20848-246**	**20848-246**			–
	16	**20848-248**	**20848-248**	**20848-248**			–
Fixing material see page		7.27	7.27	7.27			7.27
Dimensions see page		7.30	7.30	7.29			7.31

1) SPQ (standard pack quantity): Part number includes 1 piece, but delivery is exclusively made in standard pack quantity (SPQ); please order at least the SPQ quantity or a multiple

Part no. includes one packing unit (PU); delivery is exclusively made in PU

ORDER INFORMATION

	Inserter/extractor handle, type IEL, board fixing without offset				Inserter/extractor handle, type IEL, board fixing with 0.1" offset			
	lever: light grey, RAL 7035 key: black, RAL 9005		lever: black, RAL 9005 key: lightgrey, RAL 7035		lever: light grey, RAL 7035 key: black, RAL 9005		lever: black, RAL 9005 key: lightgrey, RAL 7035	
								
	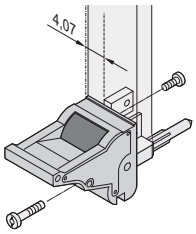 04608050		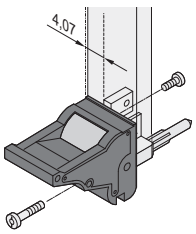 04608052		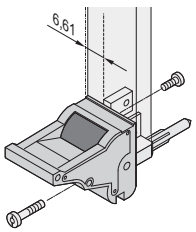 04608051		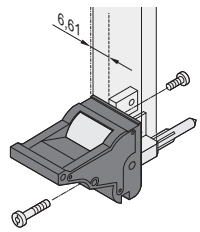	
	in accordance with IEEE 1101.10 and IEC 60297-3-102, with locking, suitable for insertion and extraction forces up to 700 N (per pair), suitable for fitting of microswitches; block die-cast zinc, nickel-plated, with integrated alignment pin for perforated strip, codable to IEEE 1101.10 and IEC 60297-3-103, lever/key UL 94 V0, EN 45545-2, R22 - R24, HL 3, slotted Pozidrive collar screw, M2.5 x 12.3, St, nickel-plated, panhead screw with Torx, M2.5 x 7, St, nickel-plated				in accordance with IEEE 1101.10 and IEC 60297-3-102, with locking, suitable for insertion and extraction forces up to 700 N (per pair), suitable for fitting of microswitches; 0.1" offset is used for PSUs with SMD Plus, block die-cast zinc, nickel plated; with integrated alignment pin for perforated strip,codable to IEEE 1101.10 and IEC 60297-3-103, lever/key UL 94V0, EN 45545-2, R22 - R24, HL 3, slotted Pozidrive collar screw, M2.5 x 12.3, St, nickel-plated, panhead screw with Torx, M2.5 x 7, St, nickel-plated			
Assembly	PU 10 pieces	PU 100 pieces	PU 10 pieces	PU 100 pieces	PU 10 pieces	PU 100 pieces	PU 10 pieces	PU 100 pieces
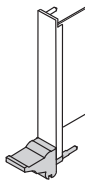 04608071	**3 U Height** bottom							
Front side	**20817-620**	**20817-621**	**20817-612**	**20817-613**	**20817-690**	**20817-691**	**20817-682**	**20817-683**
Rear I/O	**20817-622**	**20817-623**	**20817-614**	**20817-615**	–	–	–	–
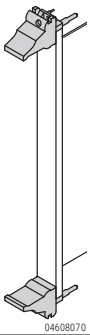 04608070	**6 U Height** top							
Front side	**20817-622**	**20817-623**	**20817-614**	**20817-615**	**20817-692**	**20817-693**	**20817-684**	**20817-685**
Rear I/O	**20817-620**	**20817-621**	**20817-612**	**20817-613**	–	–	–	–
	bottom							
Front side	**20817-620**	**20817-621**	**20817-612**	**20817-613**	**20817-690**	**20817-691**	**20817-682**	**20817-683**
Rear I/O	**20817-622**	**20817-623**	**20817-614**	**20817-615**	–	–	–	–
Dimensions see page	7.32				7.32			

Part number in bold face type: ready for shipping within 2 working days
Part number in normal type: ready for shipping within 10 working days

ORDER INFORMATION

	Inserter/extractor handle, type IET, board fixing without offset				Inserter/extractor handle, type IET, board fixing with 0.1" offset			
	lever: light grey, RAL 7035 key: black, RAL 9005		lever: black, RAL 9005 key: lightgrey, RAL 7035		lever: light grey, RAL 7035 key: black, RAL 9005		lever: black, RAL 9005 key: lightgrey, RAL 7035	
								
	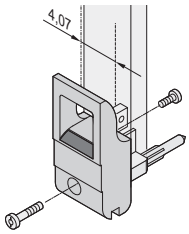 04608054		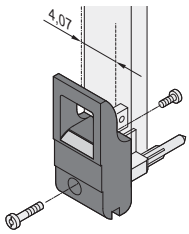 04608056		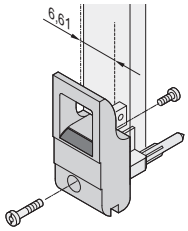		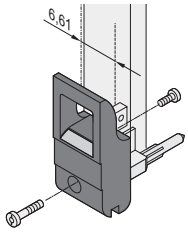	
	in accordance with IEEE 1101.10 and IEC 60297-3-102, with locking, suitable for insertion and extraction forces up to 700 N (per pair), suitable for fitting of microswitches; block die-cast zinc, nickel-plated, with integrated alignment pin for perforated strip,codable to IEEE 1101.10 and IEC 60297-3-103, lever/key UL 94 V0, EN 45545-2, R22 - R24, HL 3, Slotted Pozidrive collar screw, M2.5 x 12.3, St, nickel-plated, panhead screw with Torx, M2.5 x 7, St, nickel-plated				in accordance with IEEE 1101.10 and IEC 60297-3-102, with locking, suitable for insertion and extraction forces up to 700 N (per pair), suitable for fitting of microswitches; 0.1" offset is used for PSUs with SMD Plus: block die-cast zinc, nickel plated; with integrated alignment pin for perforated strip,codable to IEEE 1101.10 and IEC 60297-3-103, lever/key UL 94 V0, EN 45545-2, R22 - R24, HL 3, slotted Pozidrive collar screw, M2.5 x 12.3, St, nickel-plated, panhead screw with Torx, M2.5 x 7, St, nickel-plated			
Assembly	PU 10 pieces	PU 100 pieces	PU 10 pieces	PU 100 pieces	PU 10 pieces	PU 100 pieces	PU 10 pieces	PU 100 pieces
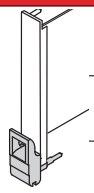 04608073	**3 U Height** bottom							
Front side	**20817-660**	**20817-661**	**20817-652**	**20817-653**	**20817-714**	**20817-715**	**20817-706**	**20817-707**
Rear I/O	**20817-662**	**20817-663**	**20817-654**	**20817-655**	–	–	–	–
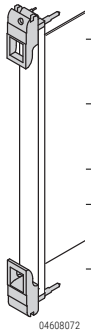 04608072	**6 U Height** top							
Front side	**20817-662**	**20817-663**	**20817-654**	**20817-655**	**20817-716**	20817-717	**20817-708**	**20817-709**
Rear I/O	**20817-660**	**20817-661**	**20817-652**	**20817-653**	–	–	–	–
	bottom							
Front side	**20817-660**	**20817-661**	**20817-652**	**20817-653**	**20817-714**	**20817-715**	**20817-706**	**20817-707**
Rear I/O	**20817-662**	**20817-663**	**20817-654**	**20817-655**	–	–	–	–
Fixing material see page	7.27				7.27			
Dimensions see page	7.33				7.33			

Plug-in units – for CompactPCI, VME64x

INDIVIDUAL COMPONENTS

INSERTER/EXTRACTOR HANDLES, TYPE IEL/IET, FIXING MATERIAL

3 U

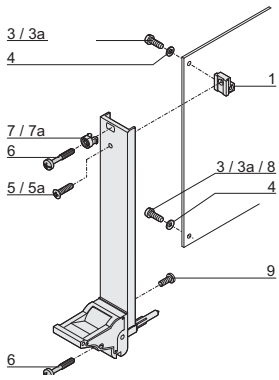

6 U

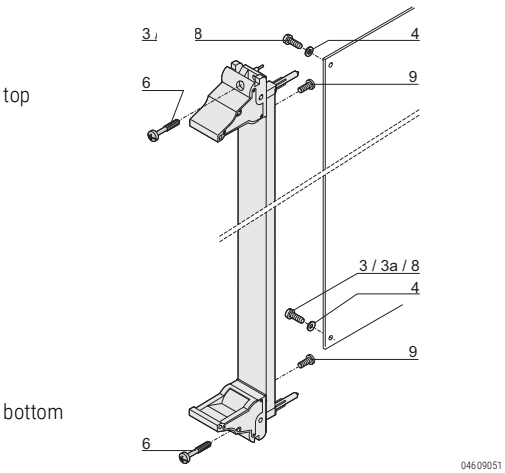

Fixing material	Item	3 U	Required quantity 3 U < 8 HP	Required quantity 3 U ≥ 8 HP	Required quantity 6 U < 8 HP	Required quantity 6 U ≥ 8 HP	Qty/PU	Part no.
Printed board bracket Zn die-cast	1	 06707050	1	1	–	–	1 piece (SPG 10)[1)]	**60807-181**
Pozidrive panhead screw M2.5 × 6, St, nickel-plated , not for 0.1" offset	3	 AZA45177	2	2	2	2	100	**21101-219**
Slotted panhead screw with Torx 8 M2.5 × 6, St, zinc-plated, self-securing thread not for 0.1" offset	3a	 aza45940	2	2	2	2	100	**24560-159**
Washer 2.7, DIN 125, St, nickel-plated	4	 AZA46586	2	2	2	2	100	**21100-721**
Raised Pozidrive countersunk panhead screw M2.5 × 8, St, nickel-plated	5	 06702056	1	1	–	–	100	**21100-429**
Raised countersunk panhead screw with Torx 8 M2.5 × 8, St, nickel-plated	5a	 06708050	1	1	–	–	100	**24560-164**
Pozidrive/slotted collar screw M2.5 × 12.3, St, nickel-plated  AZA46586	6	 AZA46586	1	3	–	2	100	**21101-101**
Collar screws pozidrive/slot (Philips) M2.5 × 12.3, St, nickel-plated 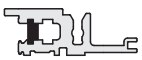 06107050	6	 AZA46586	1	3	–	2	100	**21102-026**
Plastic sleeve, for form hole 5.9 x 3.3 PA, UL 90 V-2, grey	7	 aza45933	1	3	–	2	100	**21100-464**
Metal sleeve, for form hole 5.9 x 3.3, press-in Stainless steal	7a	 aza45934	1	3	–	2	100	**21100-662**
Pozidrive panhead screw for IEL/IET handle with 0.1" offset M2.5 × 10, nickel-plated steel	8	 AZA45177	2	2	2	2	100	**21101-220**
Torx panhead screw M2.5 × 7, St, nickel-plated, Torx 8,	9	 aza45940	1	1	2	2	100	**24560-147**

SPQ (standard pack quantity): Part number includes 1 piece, but delivery is exclusively made in standard pack quantity (SPQ); please order at least the SPQ quantity or a multiple

Part number in bold face type: ready for despatch within 2 working days
Part number in normal type: ready for despatch within 10 working days

ORDER INFORMATION

Microswitch	Keying/coding	Label strips	Label strips	
with cable and plug	in accordance with IEC 60297-3-103	19 x 9.5 mm	19 x 9.5 mm	19 x 4.8 mm
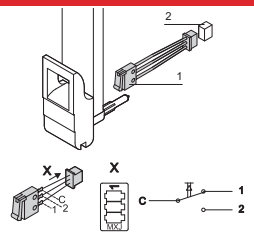 bga46314 bga46315	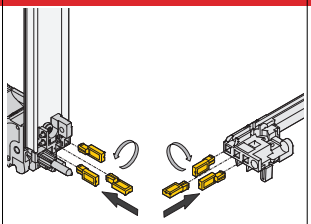 04612052	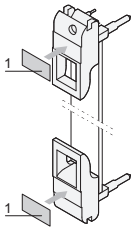 04606050	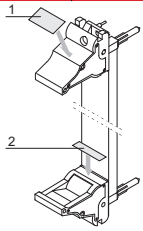 bga46317	
Molex connector housing 51021-0300, Molex crimp contact 50058-8000 and fixing clip (item 3), plastic, PC, UL 94 V-0, max. switched current 50 mA, operating range -25 °C to +70 °C, mech. life ≥ 20,000 switching cycles, electr. life ≥ 20,000 switching cycles; suitable mating connectors (item 2) e.g. Molex 53261-0319, 53048-0310, 53047-0310, 53398-0319, 51047-0300 not included in scope of delivery	The keying/coding pegs prevent plug-in units to be mounted in wrong slots. They are inserted in the chambers of the codable card guides as well as in the insertion/extraction handles IEL or IET (4 possible positions), resulting in 64 codings per card guide; when coding the upper and lower card guide, 4096 codings will result; guide rails for coding see page 6.40	Polyester, self-adhesive,white, 1 sheet 210 pieces (Item 1)	Polyester, self-adhesive, white, 1 sheet 210 pieces (item 1)	Polyester, self-adhesive, white, 1 sheet 320 pieces (item 2)
PU 10 pieces	PU 100 pieces	PU 210 pieces	PU 210 pieces	PU 320 pieces
3 U Height bottom				
20817-606	**20817-501**	**60817-340**	**60817-340**	**60817-341**
6 U Height top				
20817-606	**20817-501**	**60817-340**	**60817-340**	**60817-341**
bottom				
20817-606	**20817-501**	**60817-340**	**60817-340**	**60817-341**

PCB fixing without offset

3 U

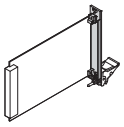

04608068

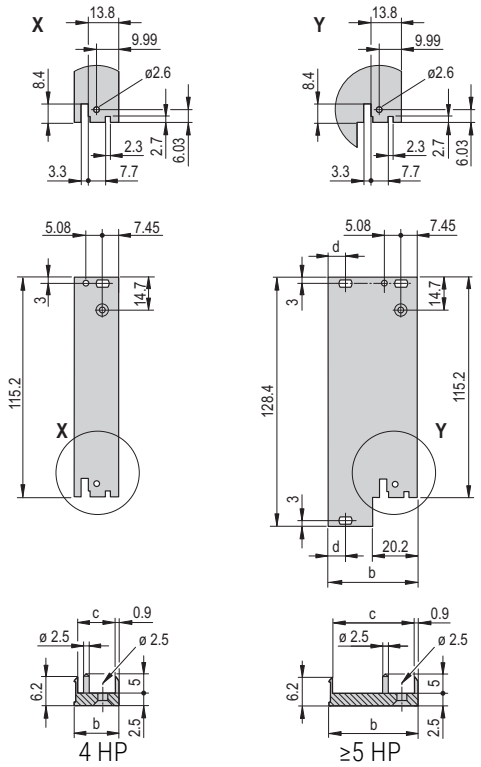

04608069

6 U

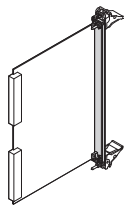

04608076

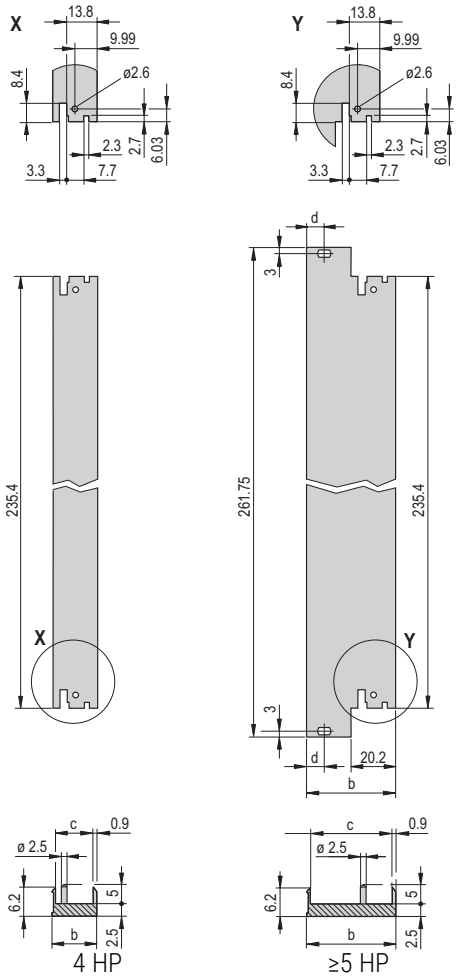

04608075

Dimensions table			
Width	b	c	d
HP	mm	mm	mm
4	19.98	17.45	–
5	25.06	22.53	–
6	30.14	27.61	–
7	35.22	32.69	–
8	40.30	37.77	7.45
9	45.38	42.85	7.45
10	50.46	47.93	7.45
11	55.54	53.01	7.45
12	60.62	58.09	7.45
14	70.78	68.25	7.45
16	80.94	78.41	7.45

Part number in bold face type: ready for despatch within 2 working days
Part number in normal type: ready for despatch within 10 working days

Plug-in units – for CompactPCI, VME64x

DIMENSIONS FRONT PANELS, U-PROFILES, INSERTER/EXTRACTOR HANDLES, TYPE IEL, IET, SHIELDABLE

PCB fixing without offset / with 0.1" offset

3 U

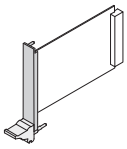

04608067

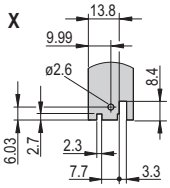

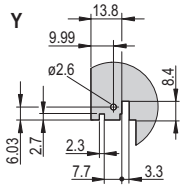

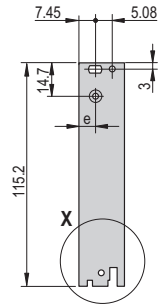

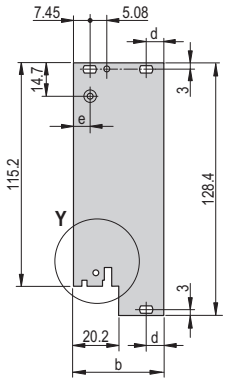

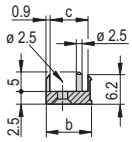

4 HP

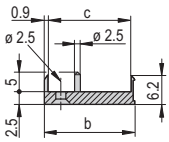

≥5 HP

04608064

6 U

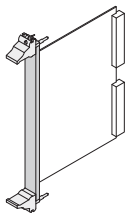

04608066

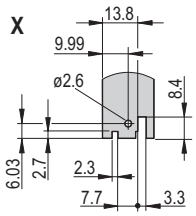

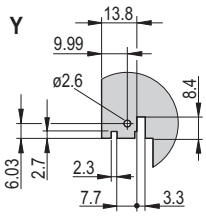

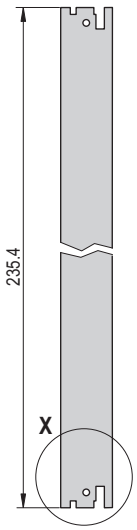

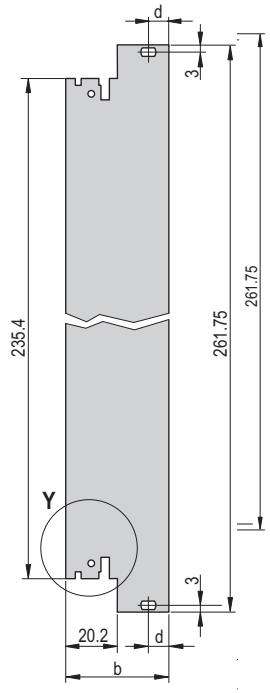

4 HP

≥5 HP

04608065

Dimensions table

Width HP	b mm	c mm	d mm	without offset e mm	with 0.1" offset e mm
4	19.98	17.45	–	7.45	9.99
5	25.06	22.53	–	7.45	9.99
6	30.14	27.61	–	7.45	9.99
7	35.22	32.69	–	7.45	9.99
8	40.30	37.77	7.45	7.45	9.99
9	45.38	42.85	7.45	7.45	9.99
10	50.46	47.93	7.45	7.45	9.99
11	55.54	53.01	7.45	7.45	9.99
12	60.62	58.09	7.45	7.45	9.99
14	70.78	68.25	7.45	7.45	9.99
16	80.94	78.41	7.45	7.45	9.99

PCB fixing without offset

3 U

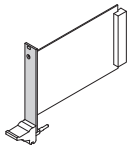

04608080

6 U

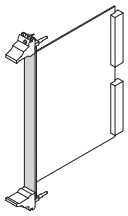

04608079

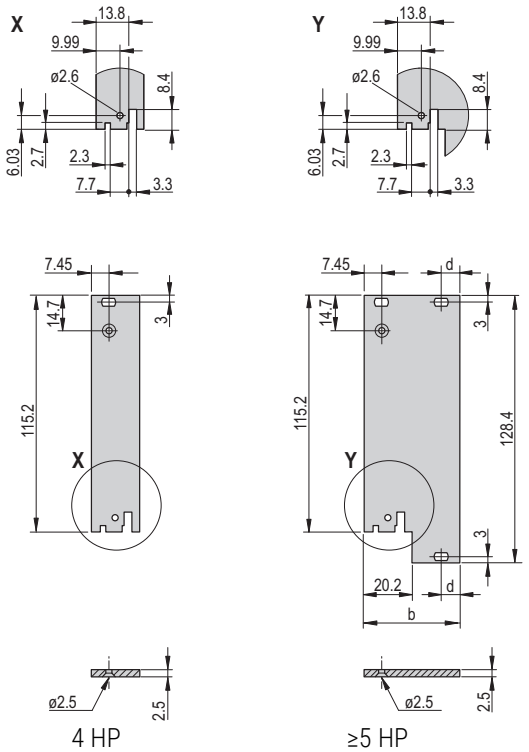

04608077

4 HP ≥5 HP

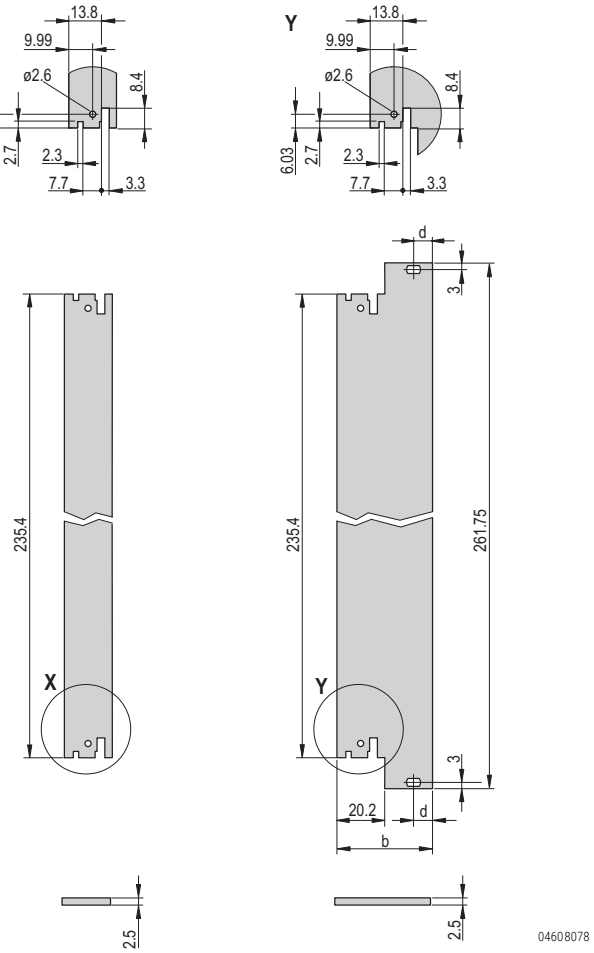

04608078

4 HP ≥5 HP

Dimensions table		
Width HP	b mm	d mm
4	19.98	–
5	25.06	–
6	30.14	–
7	35.22	–
8	40.30	7.45
9	45.38	7.45
10	50.46	7.45
11	55.54	7.45
12	60.62	7.45
14	70.78	7.45
16	80.94	7.45

Part number in bold face type: ready for despatch within 2 working days
Part number in normal type: ready for despatch within 10 working days

DIMENSIONS INSERTER/EXTRACTOR HANDLE, TYPE IEL

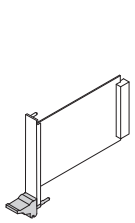

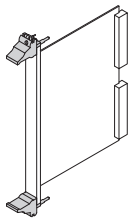

04608071 04608070

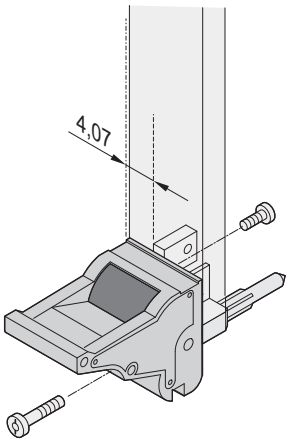

04608050

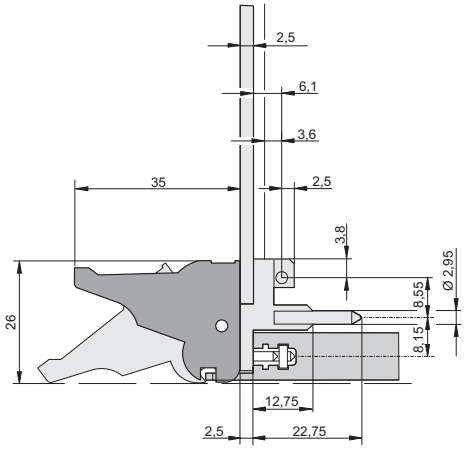

04603059

bottom

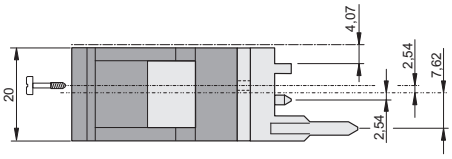

04607053

top

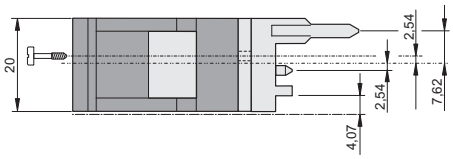

04607054

DIMENSIONS INSERTER/EXTRACTOR HANDLE, TYPE IEL, 0.1" OFFSET

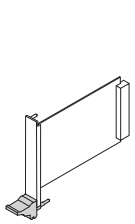

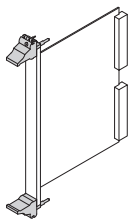

04608071 04608070

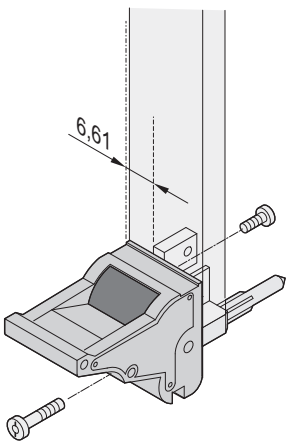

04608051

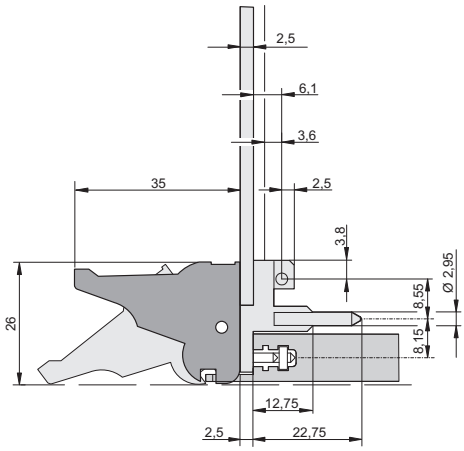

04603059

bottom

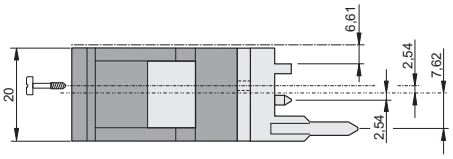

04603061

top

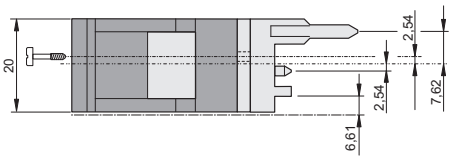

04607055

DIMENSIONS INSERTER/EXTRACTOR HANDLE, TYPE IET

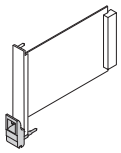

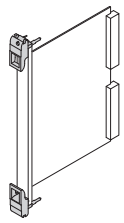

04608073 04608072

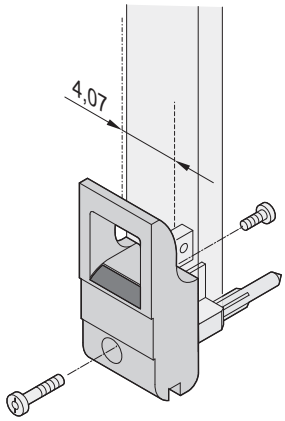

04608054

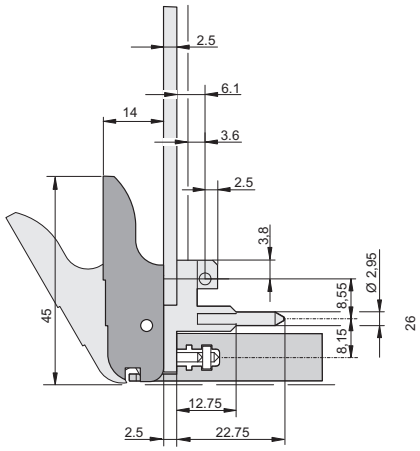

04603060

bottom

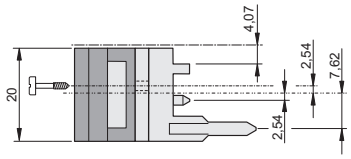

04607056

top

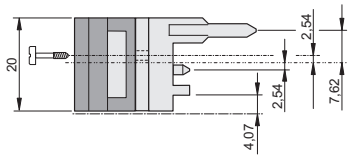

04607057

DIMENSIONS INSERTER/EXTRACTOR HANDLE, TYPE IET, 0.1" OFFSET

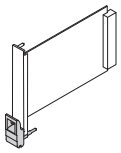

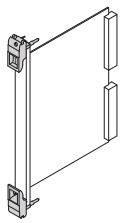

04608073 04608072

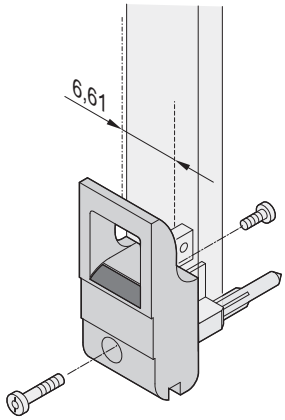

04608055

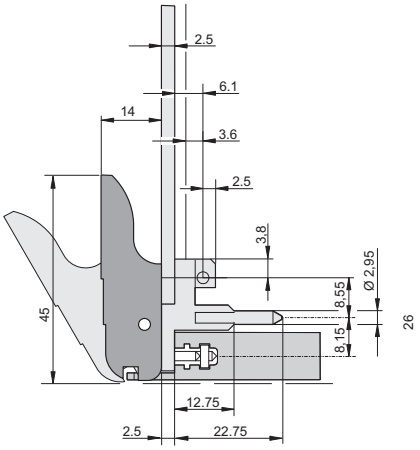

04603060

bottom

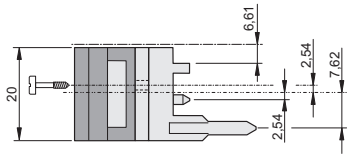

04603062

top

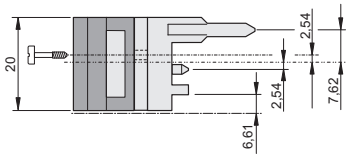

04607058

Part number in bold face type: ready for despatch within 2 working days
Part number in normal type: ready for despatch within 10 working days

Plug-in units – for CompactPCI, VME64x,

PLUG-IN UNITS WITH XL INSERTION/EXTRACTOR HANDLE FOR COMPACTPCI, VME64X, VXS AND VPX APPLICATIONS

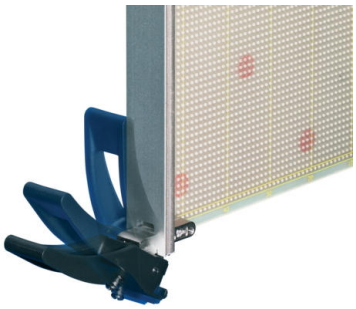

- Suitable for insertion and extraction forces up to 1500 N (per pair)
- To IEEE 1101.10 and IEC 60297-3-102
- Codable to IEC 60297-3-103/ IEEE 1101.10
- Front panel, shielded (6 U)
- Versions allowing microswitches to be fitted on request
- Online download of 3D CAD data

DELIVERY INCLUDES (Kit)

Item	Qty <8 HP	Qty ≥8 HP	Description
1	1	1	Front panel (U profile), Al, front anodized, rear conductive
2	1	1	EMC sealing (textile), core: foam, sleeve: textile cladding, CuNi coated
3	2	2	Handle with integrated alignment pin for perforated strips and guide rails, lever: plastic, PC, black, RAL 9005 Key: Plastic, PC, light gray, RAL 7035
4	-	2	Sleeve, PA, gray
5	-	2	Pozidrive collar screw, M2.5 × 12.3, St, nickel-plated
6	4	4	Panhead screw with Torx/slot, M2.5 × 6, St, zinc-plated, self-locking
7	4	4	Washer A2.7, DIN 125, St, nickel-plated
8	4	4	Pan head screw with torx M2.5 × 7, St, zinc-plated
9	1	1	XL bearing, zinc diecast, nickel-plated
10	4	4	Countersunk screw with torx M2.5 × 17, St, zinc-plated

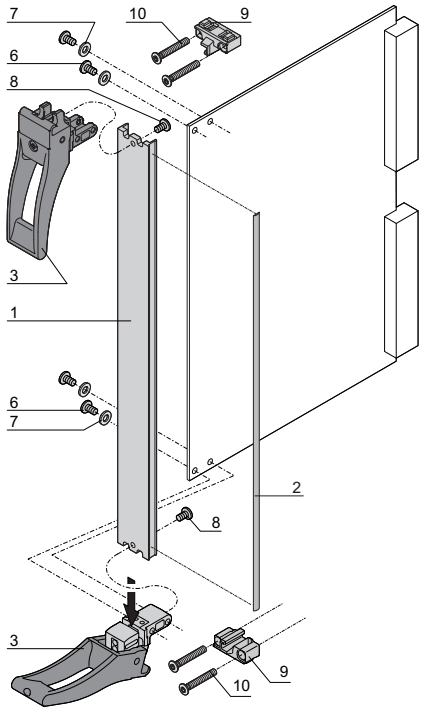

04613055

< 8 HP

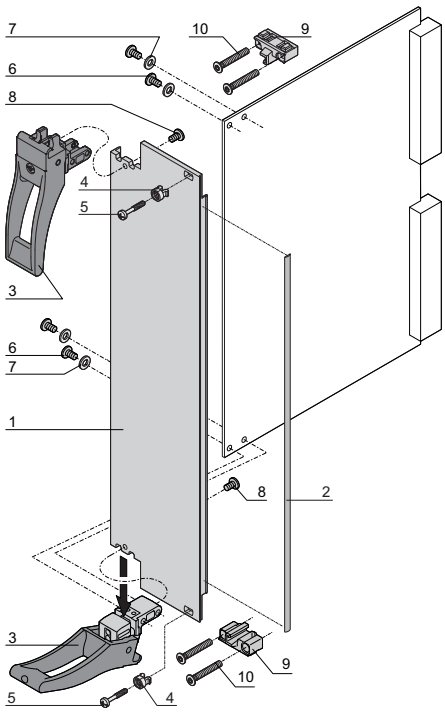

04613056

≥8 HP

ORDER INFORMATION

Width HP	Part no.
6 U Height	
4	**20848-769**
8	**20848-770**
12	**20848-771**

NOTE

- Can only be used in connection with H-LD or R-LD module rails
- Dimension drawing of front profile, see page 7.32

		Inserter/extractor handle, type XL	U front profile, shieldable, for inserter/extractor handle, type XL		EMC gasket (textile)		Microswitch item 1 with cable and plug
			without cut-out for microswitch	with cut-out for microswitch			
		 04605008	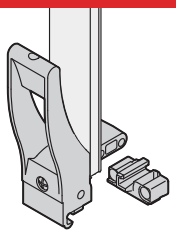 04608081	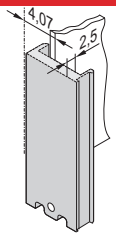 04608082	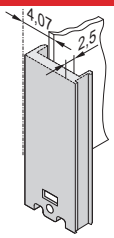 04608083	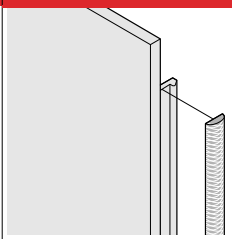 BGA45760	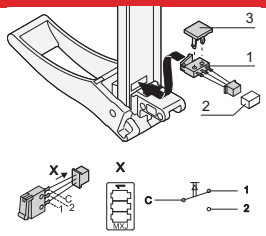 04608084 bga46315
		kit, incl. die-cast bearing and assembly kit; insertion and extraction force up to 1500 Nm per pair; handle in PA, fibreglass reinforced, UL 94V 0; robust board fixing with double bolt fixing, microswitches can be fitted	Al, front anodised, sides and rear conductive, for sleeve and collar screw see page 7.41	Al, front anodised, sides and rear conductive for sleeve and collar screw see page 7.41	always fixed laterally on the front panel, in the groove of the profile, textile gasket, core: foam, sleeve: textile cladding with CuNi coating, UL 94 V-0		Molex connector housing 51021-0300, Molex crimp contact 50058-8000 and fixing clip (item 3), plastic, PC, UL 94 V-0, max. switched current 50 mA, operating range -25 °C to +70 °C, mech. life ≥ 20,000 switching cycles, electr. life ≥ 20,000 switching cycles; suitable mating connector (item 2) e.g. Molex 53261-0319, 53048-0310, 53047-0310, 53398-0319, 51047-0300, not included in scope of delivery
	Width HP	PU 10 pieces	1 piece (SPQ 5)[1]	1 piece (SPQ 5)[1]	PU 10 pieces	PU 100 pieces	PU 10 pieces
		6 U Height					
	4		**30849-153**	30849-154			
	8	**20817-874**	**30849-155**	30849-156	**21101-855**	**21101-856**	**20817-877**
	12		**30849-157**	30849-158			
Dimensions see page		7.30	7.30	7.30			

1) SPQ (standard pack quantity): Part number includes 1 piece, but delivery is exclusively made in standard pack quantity (SPQ); please order at least the SPQ quantity or a multiple

Part no. includes one packing unit (PU); delivery is exclusively made in PU

NOTE

- Please order front panels separately

Part number in bold face type: ready for despatch within 2 working days
Part number in normal type: ready for despatch within 10 working days

DIMENSIONS U FRONT PROFILE FOR EXTRACTOR HANDLE TYPE XL, SHIELDABLE

6 U/4 HP

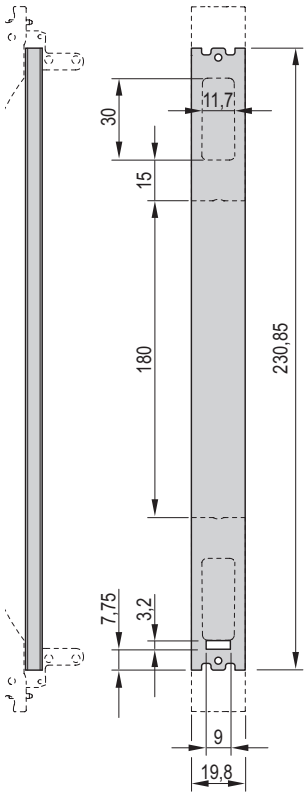

04605053

6 U/8 HP

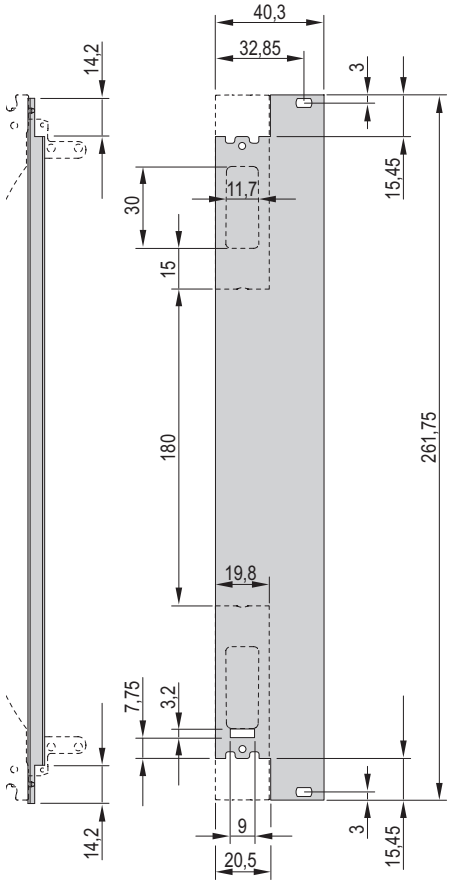

04605054

6 U/12 HP

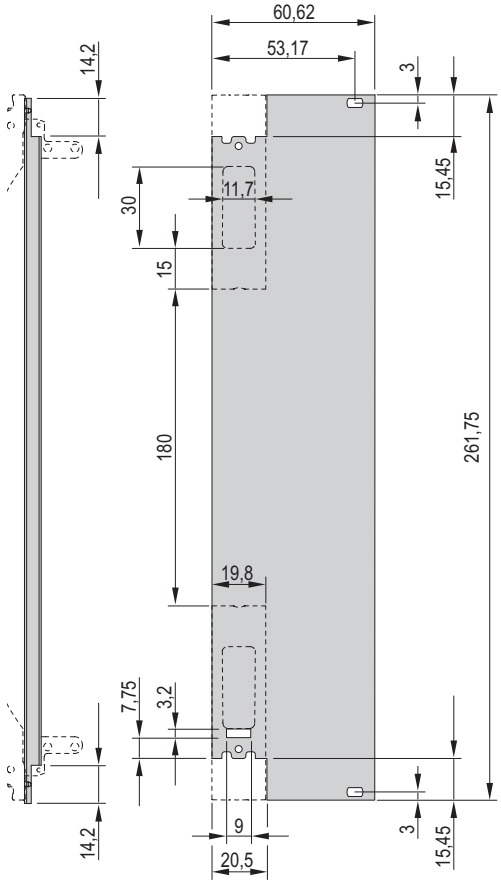

04605055

DIMENSIONS INSERTER/EXTRACTOR HANDLE, TYPE XL

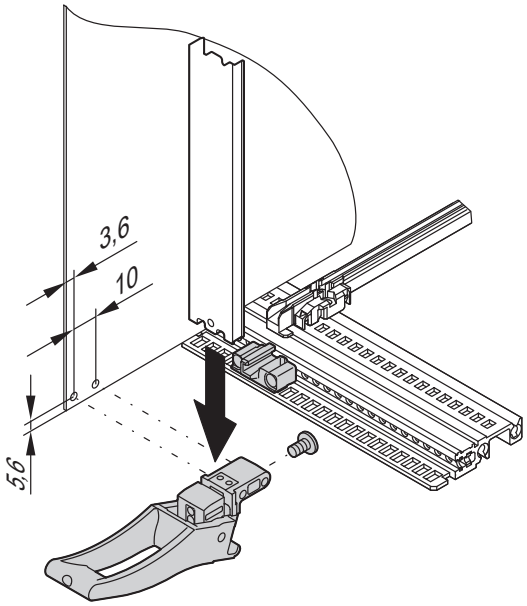

04608113

KITS

PLUG-IN UNITS WITH TRAPEZIFORM EXTRACTOR HANDLE, TYPE 2



- Shielded
- **Plastic** Material:
  UL 94 V0, EN 45545-2, R22 - R24, HL3

DELIVERY COMPRISES (kit)

Item	Qty				Description
	3 U		6 U		
	<8HP	≥8HP	<8HP	≥8HP	
1	1	1	2	2	Identification plate, Al, 1.5 mm, anodised, cut edges untreated
2	1	1	2	2	Extractor handle, trapeziform, type 2, lever: PC, light grey, RAL 7035, block die-cast zinc, nickel-plated, with integrated alignment pin for perforated strip
3	1	1	2	2	Pozidrive flathead screw, St, M2.5 x 6, nickel-plated
4	1	1	1	1	Front panel, U profile, Al, front anodised, rear conductive
5	1	1	–	–	Raised Pozidrive countersunk screw M2.5 × 8, St, nickel-plated
6	2	4	2	4	Pozidrive collar screw, M2.5 × 12.3, St, nickel-plated,
7	1	3	–	2	Sleeve, PA, grey
8	2	2	2	2	Washer A 2.7, DIN 125
9	2	2	2	2	Panhead screw with Torx/slot, M2.5 x 6, St, zinc-plated, self-locking
10	1	1	–	–	Board support, die-cast zinc
11	1	1	1	1	EMC sealing (textile), core: foam, sleeve: textile cladding, Cu-Ni coated

3 U

Remark: Delivery do not include the PCB

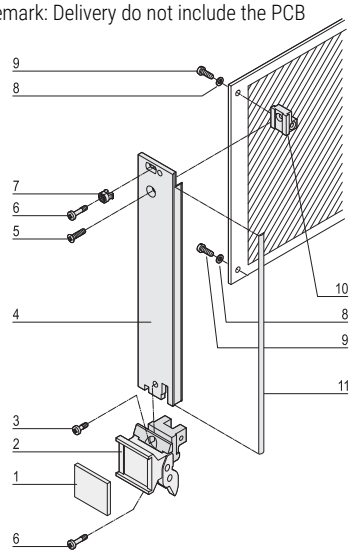

6 U

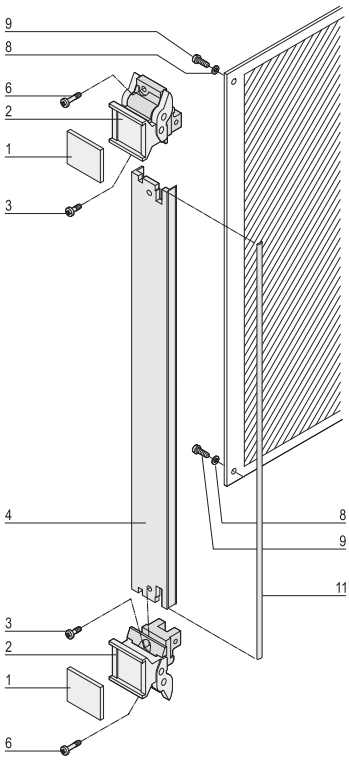

ORDER INFORMATION

Height U	Width HP	Part no.
3	4	**20848-686**
3	6	**20848-687**
3	8	**20848-688**
3	10	20848-689
3	12	20848-690
6	4	**20848-691**
6	6	**20848-692**
6	8	**20848-693**
6	10	20848-694
6	12	20848-695

- Dimension drawings of front profile see page 7.42
- Description of microswitch see page 7.35

Part number in bold face type: ready for despatch within 2 working days
Part number in normal type: ready for despatch within 10 working days

KITS

PLUG-IN UNITS WITH TRAPEZIFORM EXTRACTOR HANDLE, TYPE 2



Remark: Delivery do not include the PCB

- Unshielded
- **Plastic** Material:
  UL 94 V0, EN 45545-2, R22 - R24, HL3

DELIVERY COMPRISES (kit)

Item	Qty				Description
	3 U		6 U		
	<8HP	≥8HP	<8HP	8 HP	
1	1	1	2	2	Identification plate, Al, 1.5 mm, anodised, cut edges plain
2	1	1	2	2	Extractor handle, trapeziform ,type 2, lever: PC, light grey, RAL 7035, block: die-cast zinc, nickel-plated, without alignment PIN
3	1	1	2	2	Flathead screw M2.5 x 6, nickel-plated
4	1	1	1	1	Front panel, Al, 2.5 mm, front: anodised, rear: irisdescent green chromated
5	1	1	–	–	Raised Pozidrive countersunk screw, M2.5 × 8, St, nickel-plated
6	2	4	2	4	Slotted Pozidrive collar screw, M2.5 x 12.3, St, nickel-plated,
7	1	3	–	2	Sleeve, PA, grey
8	2	2	2	2	Washer A 2.7, DIN 125
9	2	2	2	2	Slotted Torx panhead screw, M2.5 x 6, St, zinc-plated, self-locking
10	1	1	–	–	Board support, die-cast zinc

3 U

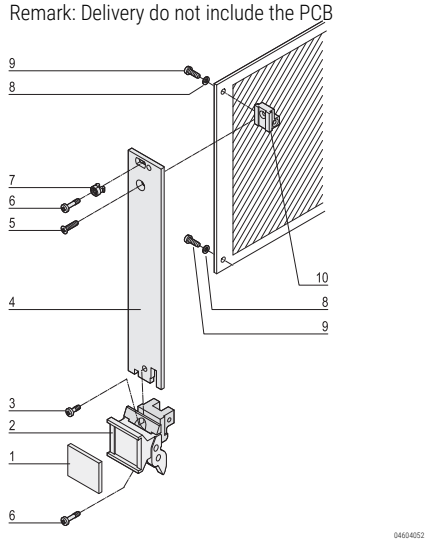

6 U

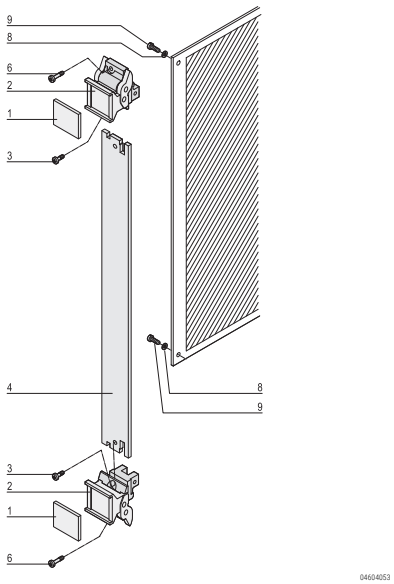

ORDER INFORMATION

Height U	Width HP	Part no.
3	4	**20817-860**
3	5	**20817-861**
3	6	**20817-862**
3	7	**20817-863**
3	8	**20817-864**
3	10	**20817-865**
3	12	**20817-866**
6	4	**20817-867**
6	5	**20817-868**
6	6	**20817-869**
6	7	**20817-870**
6	8	**20817-871**
6	10	20817-872
6	12	20817-873

- Dimension drawing of front profile see page 7.42
- Description of microswitch see page 7.35

ORDER INFORMATION

		Front panel, U profile, shieldable	Textile EMC gasket		Front panel, flat, unshielded
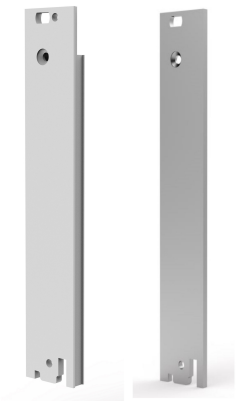 U-Profile Front panel Flat Front panel		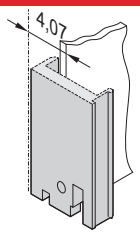 04608060 Al extrusion, 2.5 mm, front anodised, rear conductive; alignment pin pressed-in (3 U only), stainless steel; manufacturing process causes various surface structures to appear between 4 to 12 HP and 14 to 16 HP	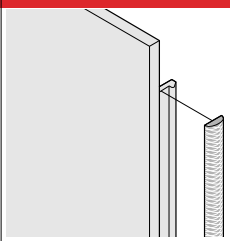 BGA45760 always fixed laterally on the front panel, in the groove of the profile, textile gasket, core: foam, sleeve: textile cladding with CuNi coating, UL 94 V-0, temperature range -40 ... 70 °C		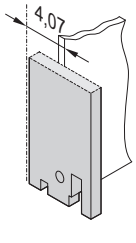 04608063 Front panel, Al, 2.5 mm, front anodised, rear irisdescent green chromated
	Width HP	1 piece (SPQ 5)[1]	PU 10 pieces	PU 100 pieces	1 piece (SPQ 5)[1]
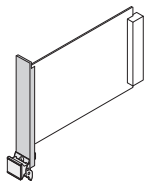 04608109		**3 U Height**			
	4	**30848-312**	**21101-853**	**21101-854**	**30848-327**
	5	**30848-300**			**30848-328**
	6	**30848-313**			**30848-329**
	7	**30848-301**			**30848-330**
	8	**30848-314**			**30848-331**
	10	**30848-315**			**30848-333**
	12	**30848-316**			**30848-335**
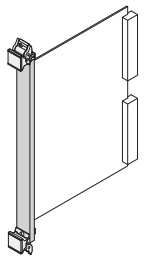 04608107		**6 U Height**			
	4	**30848-317**	**21101-855**	**21101-856**	**30848-336**
	5	**30848-304**			**30848-337**
	6	**30848-318**			**30848-338**
	7	**30848-305**			**30848-339**
	8	**30848-319**			**30848-340**
	10	**30848-320**			**30848-342**
	12	**30848-321**			**30848-344**
Dimensions see page		7.42			7.36

1) SPQ (standard pack quantity): Part number includes 1 piece, but delivery is exclusively made in standard pack quantity (SPQ); please order at least the SPQ quantity or a multiple

Part no. includes one packing unit (PU); delivery is exclusively made in PU

ORDER INFORMATION

	Trapeziform extractor handle, type 2 **without** alignment pin			Trapeziform extractor handle, type 2 **with** alignment pin		
		lever, light grey, RAL7035	lever, black, RAL 9005		lever, light grey, RAL 7035	lever, black, RAL 9005
without alignment pin 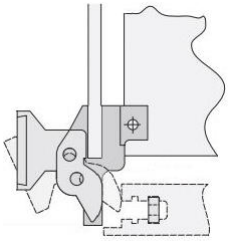 **with** alignment pin 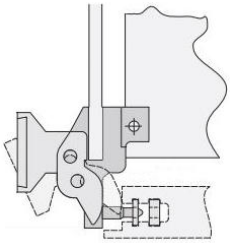	 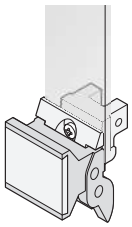 Extractor handle, PC; UL 94 V0, EN 45545-2, R22 - R24; HL 3 Block, die-cast zinc, zinc-plated; identification plate, Al, 1.5 mm, anodised, cut edges plain; Pozidrive flat-head screw, M2.5 x 6, nickel-plated; slotted Pozidrive collar screw, M2.5 x 12.3, St, nickel-plated	 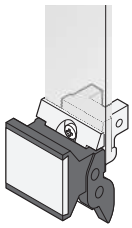		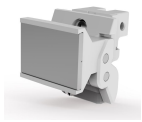 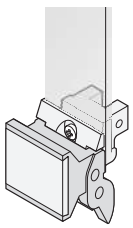 Extractor handle, PC; UL 94 V0, EN 45545-2, R22 - R24; HL 3 Block, die-cast zinc, zinc-plated; identification plate, Al, 1.5 mm, anodised, cut edges plain; Pozidrive flat-head screw, M2.5 x 6, nickel-plated; slotted Pozidrive collar screw, M2.5 x 12.3, St, nickel-plated	 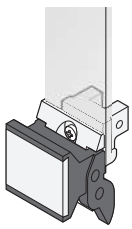
Width HP		1 piece (SPQ 10)[1]	1 piece (SPQ 10)[1]		1 piece (SPQ 10)[1]	1 piece (SPQ 10)[1]
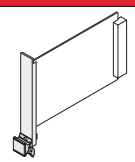 04608114	**3 U Height** bottom	**20817-858**	**20817-856**		**20817-833**	**20817-831**
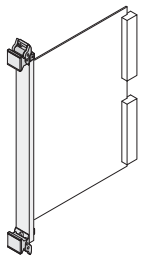 04608115	**6 U Height** top	**20817-858**	**20817-856**		**20817-833**	**20817-831**
	bottom	**20817-858**	**20817-856**		**20817-833**	**20817-831**
Dimensions see page		7.43			7.43	

1) SPQ (standard pack quantity): Part number includes 1 piece, but delivery is exclusively made in standard pack quantity (SPQ); please order at least the SPQ quantity or a multiple

Part no. includes one packing unit (PU); delivery is exclusively made in PU

FIXING MATERIAL FOR TRAPEZIFORM EXTRACTOR HANDLE, TYPE 2

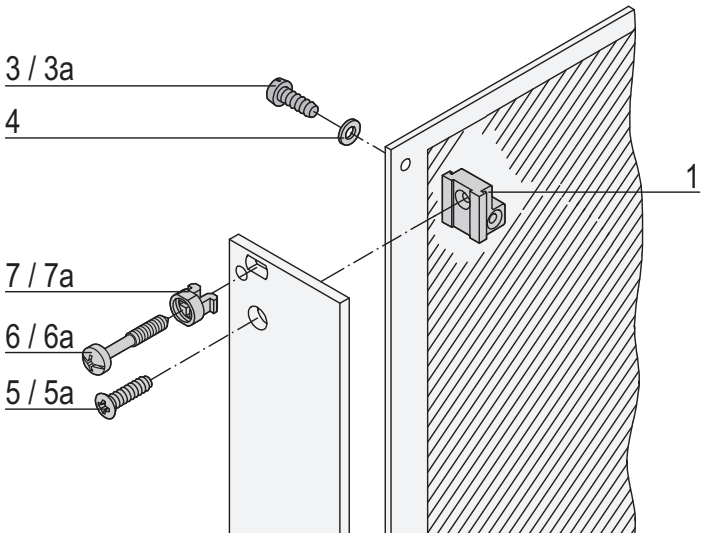

Fixing material	Item		Required quantity 3 U < 8 HP	Required quantity 3 U ≥ 8 HP	Required quantity 6 U < 8 HP	Required quantity 6 U ≥ 8 HP	Qty/PU	Part no.
Printed board bracket Zn die-cast, with M2.5 thread	1	06707050	1	1	–	–	1 Stück (LLG 10)[1)]	**60807-181**
Pozidrive panhead screw M2.5 × 6, St, nickel-plated	3	AZA45177	2	2	2	2	100	**21101-219**
Slotted panhead screw with Torx 8 M2.5 × 6, St, zinc-plated Self-securing thread	3a	aza45940	2	2	2	2	100	**24560-159**
Washer 2.7, St, nickel-plated	4	AZA46586	2	2	2	2	100	**21100-721**
Raised Pozidrive countersunk panhead screw M2.5 × 8, St, nickel-plated	5	06702056	1	1	–	–	100	**21100-429**
Raised countersunk panhead screw with Torx 8 M2.5 × 8, St, nickel-plated	5a	06708050	1	1	–	–	100	**24560-164**
Collar screws pozidrive/slot (Philips) M2.5 × 12.3, St, nickel-plated	6	AZA46586 / AZA46586	1	3	–	2	100	**21102-026**
Slotted Pozidrive collar screw M2.5 × 12.3, St, nickel-plated	6a	AZA46586 / AZA46586	1	3	–	2	100	**21101-101**
Plastic sleeve, for form hole 5.9 x 3.3 PA, UL 90 V-2, grey	7	aza45933	1	3	–	2	100	**21100-464**
Metal sleeve, for form hole 5.9 x 3.3, press-in Stainless steal	7a	aza45934	1	3	–	2	100	**21100-662**

1) SPQ (standard pack quantity): Part number includes 1 piece, but delivery is exclusively made in standard pack quantity (SPQ); please order at least the SPQ quantity or a multiple

Part number in bold face type: ready for despatch within 2 working days
Part number in normal type: ready for despatch within 10 working days

DIMENSIONS FRONT PANELS, U PROFILES, FOR TRAPEZIFORM EXTRACTOR HANDLES, TYPE 2

3 U

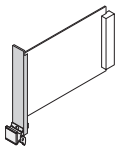

04608109

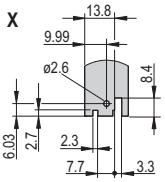

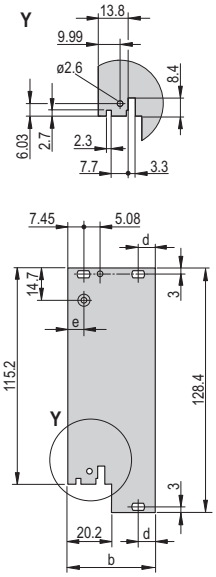

4 HP

≥5 HP

6 U

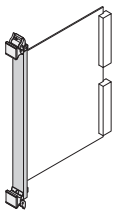

04608107

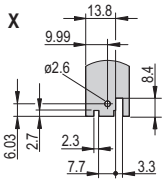

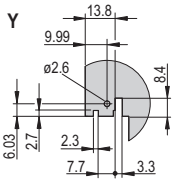

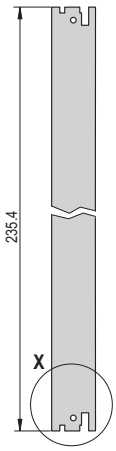

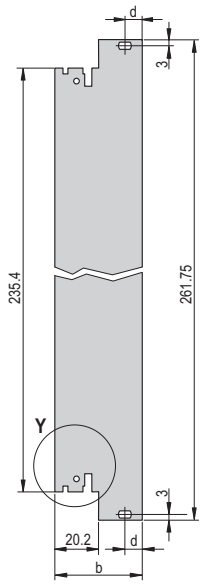

shieldable



unshielded

04608064 04608077

4 HP

04608065 04608078

≥5 HP

Dimensions table			
Width	b	c	d
HP	mm	mm	mm
4	19.98	17.45	–
5	25.06	22.53	–
6	30.14	27.61	–
7	35.22	32.69	–
8	40.30	37.77	7.45
9	45.38	42.85	7.45
10	50.46	47.93	7.45
11	55.54	53.01	7.45
12	60.62	58.09	7.45
14	70.78	68.25	7.45
16	80.94	78.41	7.45

DIMENSION DRAWINGS EXTRACTOR HANDLE, TRAPEZIFORM, TYPE 2

with alignment pin

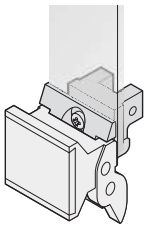

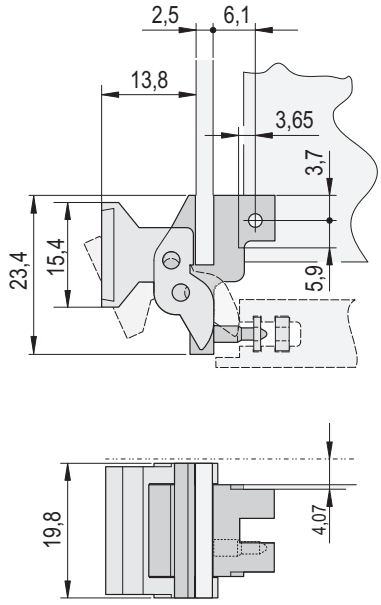

without alignment pin

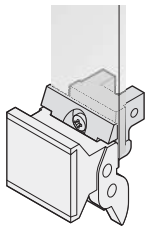

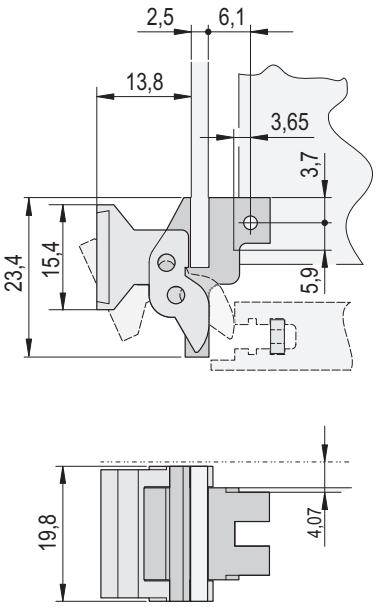

Part number in bold face type: ready for despatch within 2 working days
Part number in normal type: ready for despatch within 10 working days

PLUG-IN UNITS WITH TRAPEZIFORM EXTRACTOR HANDLE, TYPE 1 – FRONT PANEL, U-PROFILE, SHIELDED



Remark: Delivery do not include the PCB

- At 6 U the board position can be offset by 1 HP to the right by swapping the top and bottom board supports; thus space is created for SMD components on the left (solder) side; for board thickness 1.6 mm only
- **Plastic** Material: UL 94 V0, EN 45545-2, R22 - R24, HL3

DELIVERY COMPRISES (kit)

Item	Qty 3 U	Qty 6 U	Description
1	1	1	Extractor handle, trapeziform type, PC, grey (RAL 7035), bottom
1a	-	1	Extractor handle, trapeziform type, PC, grey (RAL7035), top
2	1	2	Identification plate, Al, 1.5 mm, anodised,cut edges plain
3	1	2	Pivot bush, Ms
4	1	1	Board support, die-cast zinc, bottom
4a	-	1	Board support, die-cast zinc, top
5	1	-	Board support, die-cast zinc
6	1	1	Front panel, U profile, for trapeziform extractor handle, front anodised, rear conductive
7	2	2	Alignment pin, pressed-in, stainless steel
8	2	2	Sleeve, PA, grey, up to 7 HP front panel width
8	4	4	Sleeve, PA, grey, from 8 HP front panel width
9	2	2	Collar screw, Pozidrive/slot, St, nickel-plated, M2.5 x 12.3, front panel width up to 7 HP
9	4	4	Collar screw, Pozidrive/slot, St, nickel-plated, M2.5 x 12.3, front panel width from 8 HP
11	1	2	Raised countersunk panhead screw, M2.5 x 8
12	1	1	EMC gasket (textile)
13	2	2	Washer, A2.7, DIN 125
14	2	2	Pozidrive flathead screw, St, nickel-plated, M2.5 x 10

3 U

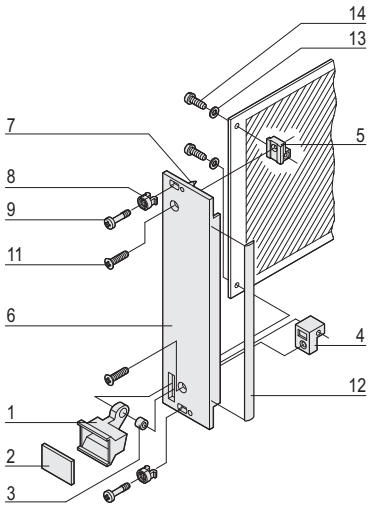

04602058

6 U

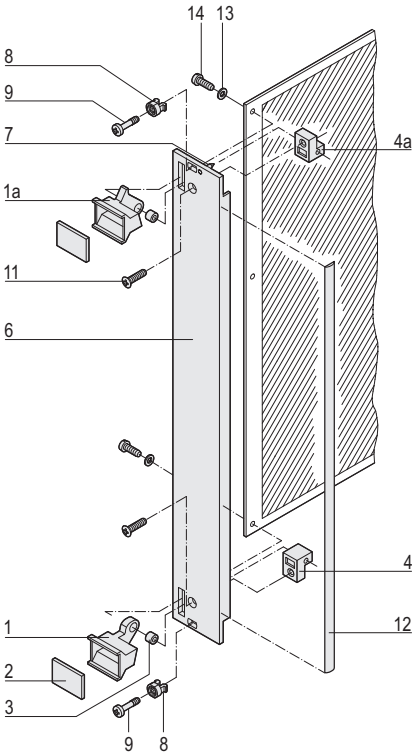

04602059

ORDER INFORMATION

Width HP	3 U Part no.	6 U Part no.
4	**20848-485**	**20848-492**
6	**20848-487**	**20848-494**
8	**20848-489**	**20848-496**
10	**20848-490**	20848-497
12	**20848-491**	**20848-498**

NOTE

- Dimension of the front panels see page 7.49

KITS

PLUG-IN UNITS WITH TRAPEZIFORM EXTRACTOR HANDLE, TYPE 1 – FRONT PANEL UNSHIELDED



Remark: Delivery do not include the PCB

3 U

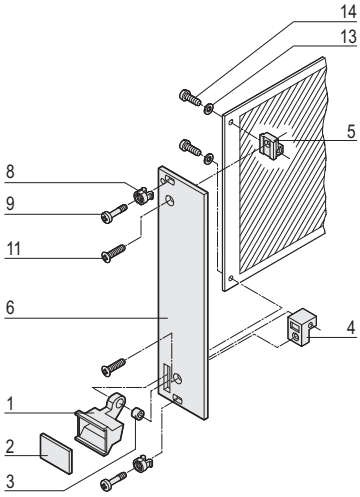

04602060

6 U

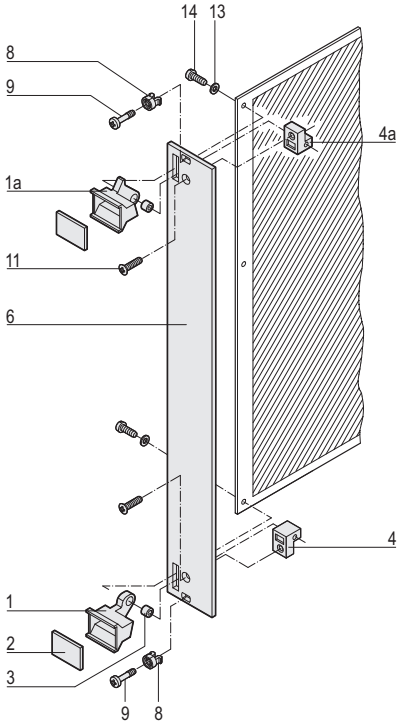

04602061

- At 6 U the board position can be offset by 1 HP to the right by swapping the top and bottom board supports; thus space is created for SMD components on the left (solder) side;
  for board thickness 1.6 mm only
- **Plastic** Material:
  UL 94 V0, EN 45545-2, R22 - R24, HL3

DELIVERY COMPRISES (kit)

Item	Qty 3 U	Qty 6 U	Description
1	1	1	Extractor handle, trapezium shape, PC, grey (RAL7035), bottom
1a	–	1	Extractor handle, trapezium shape, PC, grey (RAL7035), top
2	1	2	Identification plate, Al, 1.5 mm, anodised, cut edges plain
3	1	2	Pivot bush, Ms
4	1	1	Board support, die-cast zinc, bottom
4a	–	1	Board support, die-cast zinc, top
5	1	–	Board support, die-cast zinc
6	1	1	Front panel for trapeziform extractor handle, front anodised, rear irisdescent green chromated
8	2	2	Sleeve, PA, grey, up to 7 HP front panel width
8	4	4	Sleeve, PA, grey, from 8 HP front panel width
9	2	2	Collar screw, Pozidrive/slot, St, nickel-plated, M2.5 × 12.3, front panel width up to 7 HP
9	4	4	Collar screw, Pozidrive/slot, St, nickel-plated, M2.5 × 12.3, front panel width from 8 HP
11	1	2	Raised countersunk panhead screw, M2.5 × 8
13	2	2	Washer, A2.7, DIN 125
14	2	2	Pozidrive flathead screw, St, nickel-plated, M2.5 × 10

ORDER INFORMATION

Width HP	3 U Part no.	6 U Part no.
4	**20817-443**	**20817-448**
5	**20817-444**	**20817-449**
6	**20817-445**	**20817-450**
7	**20817-446**	**20817-451**
8	**20817-447**	**20817-452**
10	**20817-456**	**20817-458**
12	**20817-457**	**20817-459**

NOTE

- Dimension front panel see page 7.49

Part number in bold face type: ready for despatch within 2 working days
Part number in normal type: ready for despatch within 10 working days

ORDER INFORMATION

		Front panel, U profile, shieldable	Textile EMC gasket		Front panel, unshielded
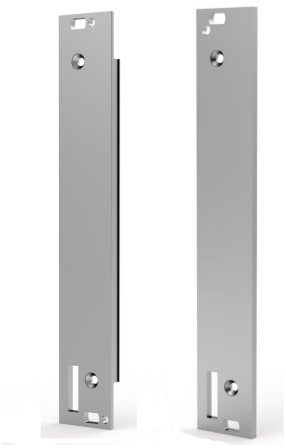 U-Profile Front panel Flat Front panel		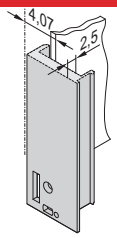 04608091 Al profile, front anodised, rear conductive, alignment pin pressed-in, stainless steel	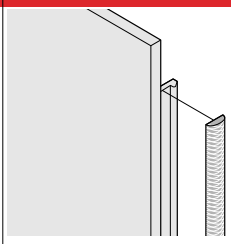 BGA45760 always fixed laterally on the front panel, in the groove of the profile, textile gasket, core: foam, sleeve: textile cladding with CuNi coating, UL 94 V-0, temperature range -40 ... 70 °C		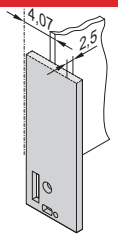 04608092 front panel, Al, 2.5 mm, front anodised, rear irisdescent green chromated
	Width HP	1 piece (SPQ 5)[1]	PU 10 pieces	PU 100 pieces	1 piece (SPQ 5)[1]
		3 U Height			
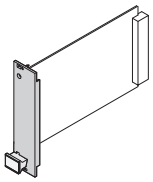 04608117	4	**30848-461**	**21101-853**	**21101-854**	**30847-659**
	5	–			**30847-660**
	6	**30848-463**			**30847-661**
	7	–			**30847-662**
	8	**30848-465**			**30847-663**
	10	**30848-466**			**30847-664**
	12	**30848-467**			**30847-665**
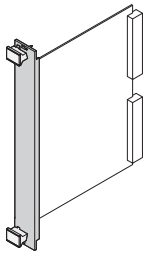 04608116		**6 U Height**			
	4	**30848-468**	**21101-855**	**21101-856**	**30847-666**
	5	–			**30847-667**
	6	**30848-470**			**30847-668**
	7	–			**30847-669**
	8	**30848-472**			**30847-670**
	10	**30848-473**			**30847-671**
	12	**30848-474**			**30847-672**
Dimensions see page		7.49			7.49

1) SPQ (standard pack quantity): Part number includes 1 piece, but delivery is exclusively made in standard pack quantity (SPQ); please order at least the SPQ quantity or a multiple

Part no. includes one packing unit (PU); delivery is exclusively made in PU

ORDER INFORMATION

	Trapeziform extractor handle	
	black (RAL 9005)	grey (RAL 7035)
		
		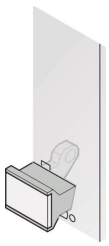
pivot bush; identification plate,	Handle closed laterally, PC, UL 94 V0, EN 45545-2, R22 -R24, HL3 Identification plate, Al, 1.5 mm, anodised, cut edges plain; pivot bush, board support die-cast zinc; in the 6 U version, space can be created for SMD components on the left side by swapping the top and bottom handles and thus moving the PCB position 1 HP to the right	
Width HP	1 piece (SPQ 10)[1)]	1 piece (SPQ 10)[1)]
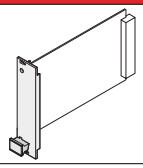 04608119	**3 U Height** top	
	20817-329	**20817-327**
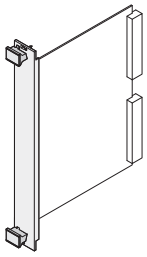 04608118	**6 U Height** top	
	20817-330	**20817-328**
	bottom	
	20817-329	**20817-327**

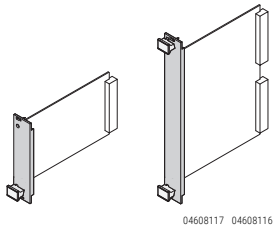

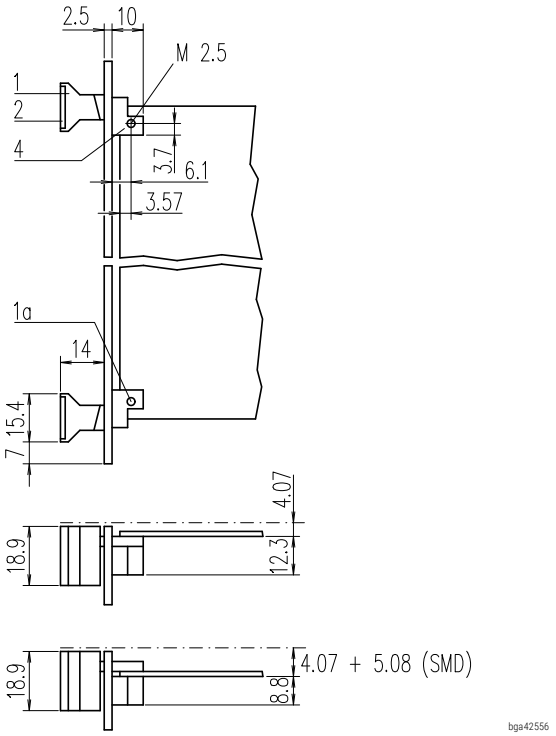

1) SPQ (standard pack quantity): Part number includes 1 piece, but delivery is exclusively made in standard pack quantity (SPQ); please order at least the SPQ quantity or a multiple

INDIVIDUAL COMPONENTS

FIXING MATERIAL FOR TRAPEZIFORM EXTRACTOR HANDLE, TYPE 1

ORDER INFORMATION

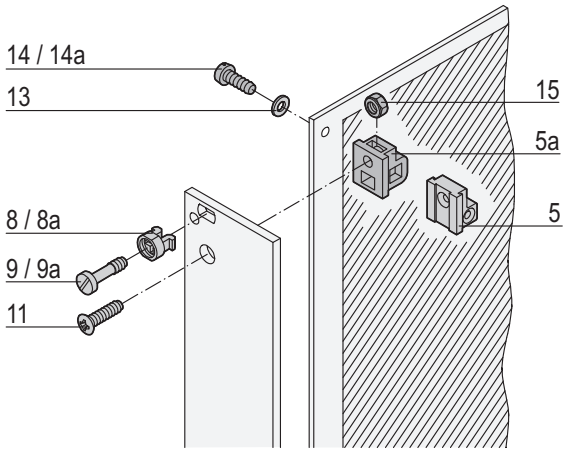

bga42545

Fixing material	Item		Required Qty 3 U < 8 HP	Required Qty 3 U ≥ 8 HP	Required Qty 6 U < 8 HP	Required Qty 6 U ≥ 8 HP	Qty/PU	Part no.
Board support, die-cast zinc, with thread M2.5, for front panel and PCB fixing	5	06707050	1	2	2	4	1 piece (SPQ 10)[1)]	**60807-181**
Board support, plastic, PBT, UL 94 V-0, grey, with recess for hexagon nut M2.5, for fixing front panel	5a	AZA45177	1	2	2	4	1 piece (SPQ 10)[1)]	**60807-183**
Plastic sleeve, for form hole 5.9 x 3.3 PA, UL 90 V-2, grey	8	aza45933	2	4	2	4	100	**21100-464**
Metal sleeve, for form hole 5.9 x 3.3, press-in Stainless steal	8a	aza45934	2	4	–	–	100	**21100-662**
Collar screws pozidrive/slot (Philips) M2.5 x 12.3, St, nickel-plated	9	AZA46586	2	4	2	4	100	**21102-026**
Pozidrive/slotted collar screw M2.5 x 12.3, St, nickel-plated	9a	AZA46586	2	4	2	4	100	**21101-101**
Raised Pozidrive countersunk screw M2.5 x 8, St, nickel-plated	11	06702056	2	2	2	2	100	**21100-429**
Washer 2.7 DIN 125, St, nickel-plated, 100 pieces	13	AZA46586	2	2	2	2	100	**21100-721**
Pozidrive panhead screw M2.5 x 10, St, nickel-plated for item 5	14	AZA45177	2	2	2	2	100	**21101-220**
Panhead screw, self-tapping 2.5 x 8, St, zinc-plated for item 5b	14a	06702057	1	1	–	–	100	**21100-710**
Hexagon nut M2.5, nickel-plated steel for item 5b	15	aza43239	1	1	–	–	100	**21100-144**

1) SPQ (standard pack quantity): Part number includes 1 piece, but delivery is exclusively made in standard pack quantity (SPQ); please order at least the SPQ quantity or a multiple

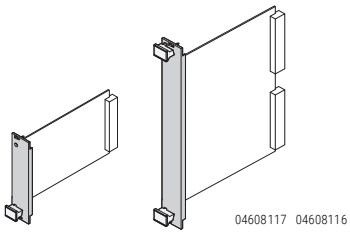

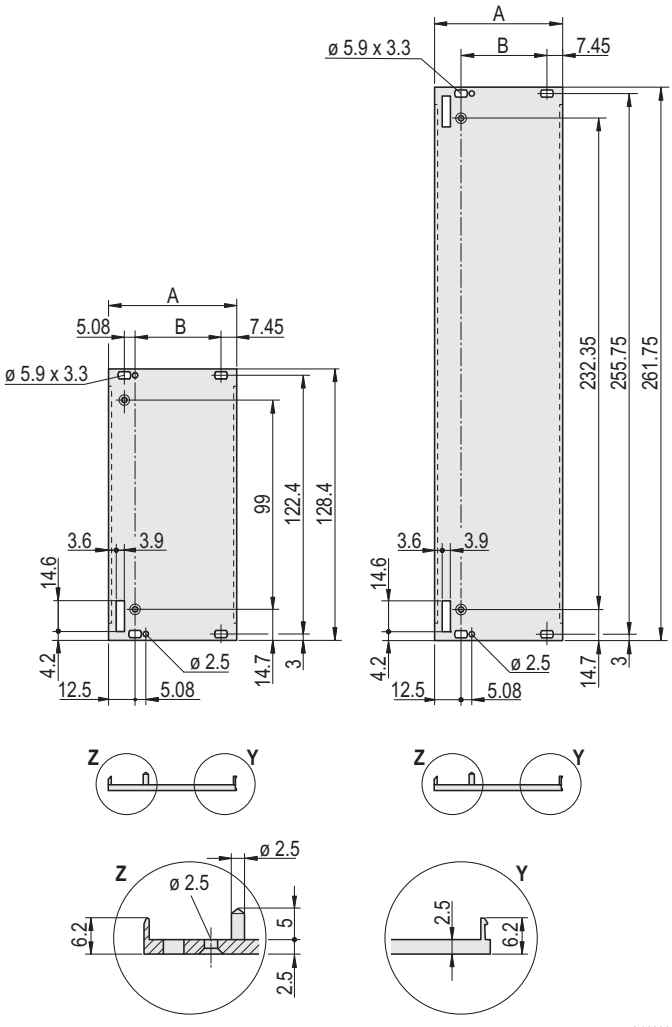

3 U 6 U

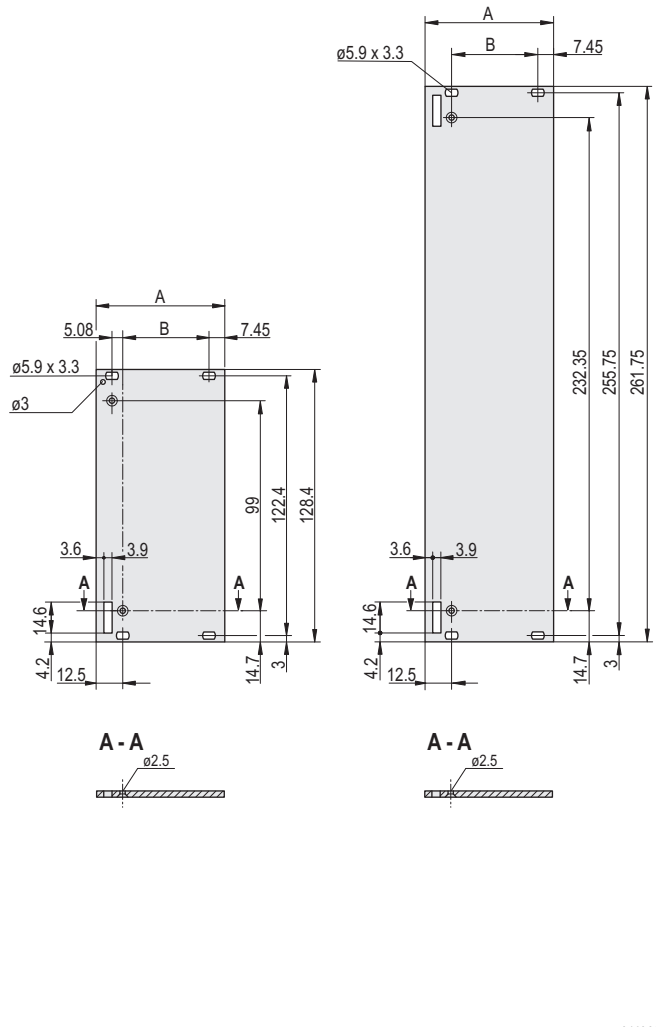

3 U 6 U

Dimensions table		
Width HP	A mm	B mm
4	19.98	–
5	25.06	–
6	30.14	–
7	35.22	–
8	40.30	20.32
10	50.46	30.48
12	60.62	40.64

Part number in bold face type: ready for despatch within 2 working days
Part number in normal type: ready for despatch within 10 working days

ORDER INFORMATION

	Extractor handle		Front panel	Fixing clip
	black	grey		
				
	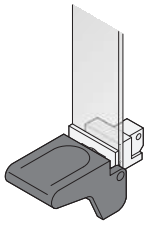	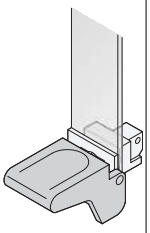	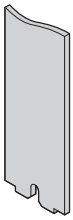	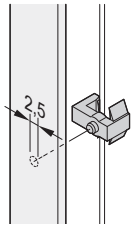
	extractor handle in key form 1, PC, UL 94 V-0; bearing Zn die-cast, nickel-plated; slotted cheesehead screw, M2.5 x 6 (fitted); in the 6 U version, space can be created for SMD components on the left side by swapping the top and bottom handles and thus moving the PCB position 1 HP to the right		Al, 2.5 mm; available on request	for fixing PCB to the front panel (blind hole X2.6, depth 1.3 mm); also for SMD applications; clip, PPE, UL 94 V-0, red
Width HP	1 piece (SPQ 10)[1]	1 piece (SPQ 10)[1]		PU 100 pieces
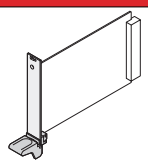 04608123	**3 U Height** bottom			
	20817-345	**20817-325**	–	–
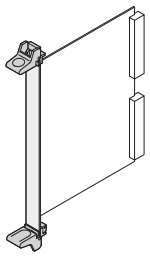 04608122	**6 U Height** top			
	20817-346	**20817-326**	–	**21100-719**
	bottom			
	20817-345	**20817-325**	–	
Dimensions see page	7.52	7.52	7.52	

1) SPQ (standard pack quantity): Part number includes 1 piece, but delivery is exclusively made in standard pack quantity (SPQ); please order at least the SPQ quantity or a multiple

Part no. includes one packing unit (PU); delivery is exclusively made in PU

- Please order colar screw separately 7.52

ORDER INFORMATION

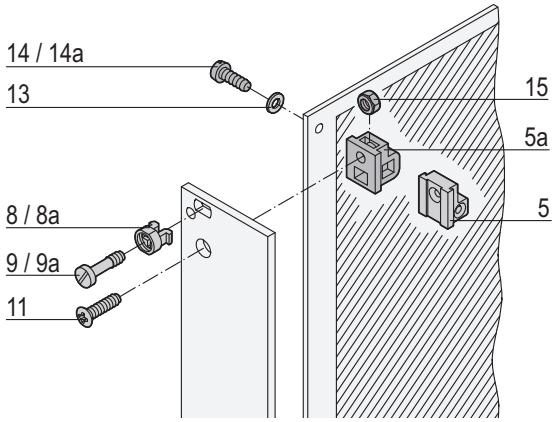

bga42545

Fixing material	Item		Required Qty 3 U	Required Qty 6 U	Qty/PU	Part no.
Board support, die-cast zinc, with thread M2.5, for front panel and PCB fixing	5	 06707050	1	–	1 piece (SPQ 10)[1]	**60807-181**
Board support, plastic, PBT, UL 94 V-0, grey, with recess for hexagon nut M2.5, for fixing front panel	5a	 AZA45177	1	–	1 piece (SPQ 10)[1]	**60807-183**
Plastic sleeve, for form hole 5.9 x 3.3 PA, UL 90 V-2, grey	8	 aza45933	1	–	100	**21100-464**
Metal sleeve, for form hole 5.9 x 3.3, press-in Stainless steal	8a	 aza45934	1	–	100	**21100-662**
Collar screws pozidrive/slot (Philips) M2.5 x 12.3, St, nickel-plated 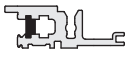 AZA46586	9	 AZA46586	2	2	100	**21102-026**
Pozidrive/slotted collar screw M2.5 x 12.3, St, nickel-plated  AZA46586	9a	 AZA46586	2	2	100	**21101-101**
Raised Pozidrive countersunk screw M2.5 x 8, St, nickel-plated	11	 06702056	1	–	100	**21100-429**
Washer 2.7 DIN 125, St, nickel-plated, 100 pieces	13	 AZA46586	2	2	100	**21100-721**
Pozidrive panhead screw M2.5 x 10, St, nickel-plated for item 5	14	 AZA45177	2	2	100	**21101-220**
Pan head screw, self-tapping 2.5 x 8, St, zinc-plated for item 5b	14a	 06702057	1	–	100	**21100-710**
Hexagon nut M2.5, nickel-plated steel for item 5b	15	 aza43239	3	6	100	**21100-144**

1) SPQ (standard pack quantity): Part number includes 1 piece, but delivery is exclusively made in standard pack quantity (SPQ); please order at least the SPQ quantity or a multiple

Part number in bold face type: ready for despatch within 2 working days
Part number in normal type: ready for despatch within 10 working days

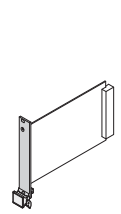

04608089 04603055

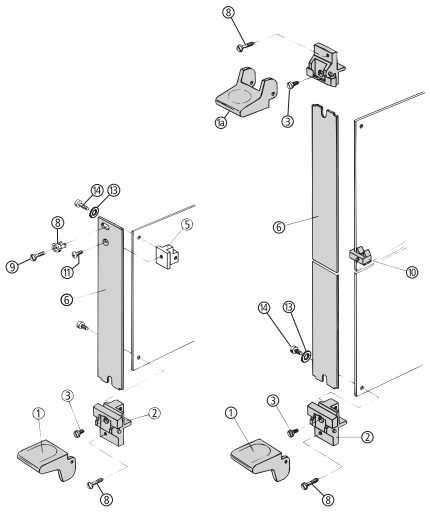

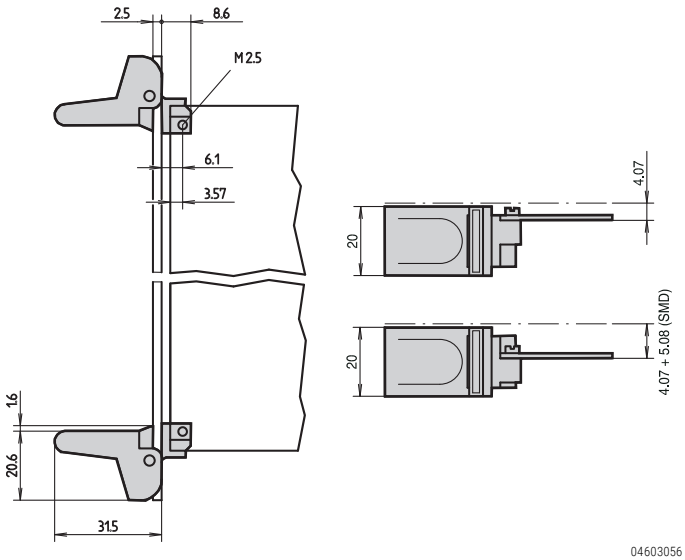

04603056

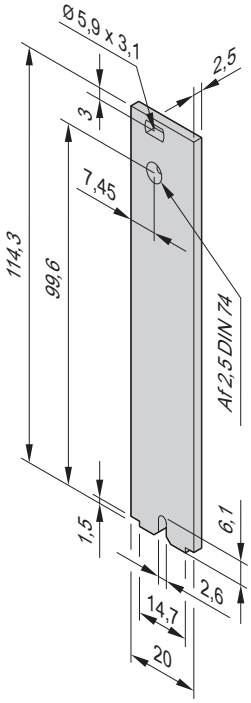

3 U

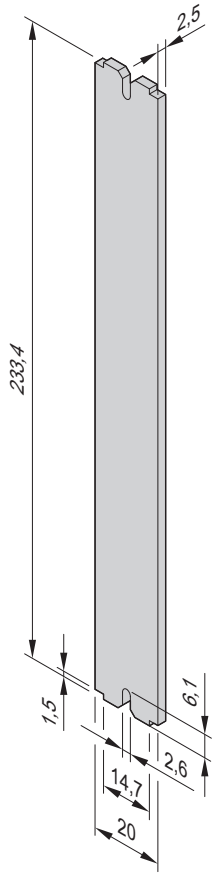

6 U

04603057

Plug-in units – for IEC 60297, trapeziform

KITS

PLUG-IN UNIT WITH STATIC TRAPEZIFORM HANDLE

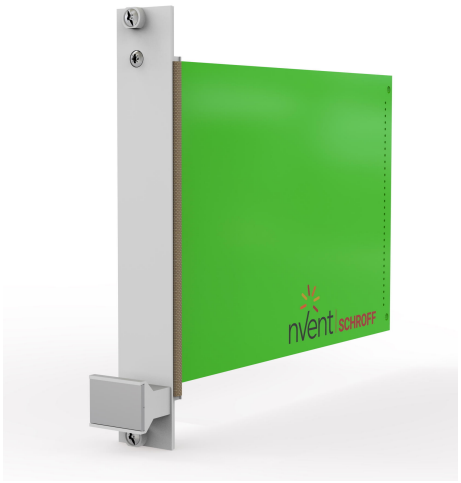

Remark: Delivery do not include the PCB

- Front panel, U-profile, shielded
- Handle without extraction function
- **Plastic** Material:
  UL 94 V0, EN 45545-2, R22 - R24, HL3

DELIVERY COMPRISES

Item	Qty 3 U	Qty 6 U	Description
1	1	2	Plastic handle, trapeziform, PC, grey (RAL 7035)
2	1	2	Identification plate, Al, 1.5 mm, anodised,cut edges plain
4	2	4	Board support, die-cast zinc
6	1	1	Front panel, U profile, for trapeziform handle, front anodised, rear conductive
7	2	2	Alignment pin, pressed-in, stainless steel
8	2	2	Sleeve, PA, grey, up to 7 HP front panel width
8	4	4	Sleeve, PA, grey, from 8 HP front panel width
9	2	2	Pozidrive/slotted collar screw, St, nickel-plated, M2.5 x 12.3, front panel width up to 7 HP
9	4	4	Pozidrive/slotted collar screw, St, nickel-plated, M2.5 x 12.3, front panel width from 8 HP
11	1	2	Raised countersunk screw, St, nickel-plated, M2.5 x 8
12	1	1	EMC sealing (textile)
13	2	4	Washer, A2.7, DIN 125
14	2	4	Pozidrive flathead screw, St, nickel-plated, M2.5 x 10
15	1	2	Hexagon nut, St, nickel-plated, M2.5
16	1	2	Pozidrive flathead screw, St, nickel-plated, M2.5 x 12
17	1	2	Pozidrive flathead screw, St, nickel-plated, M2.5 x 16

3 U

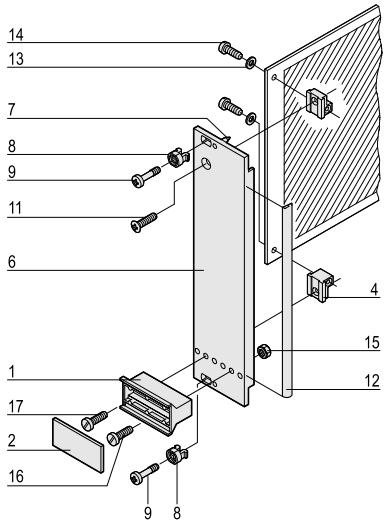

04602062

6 U

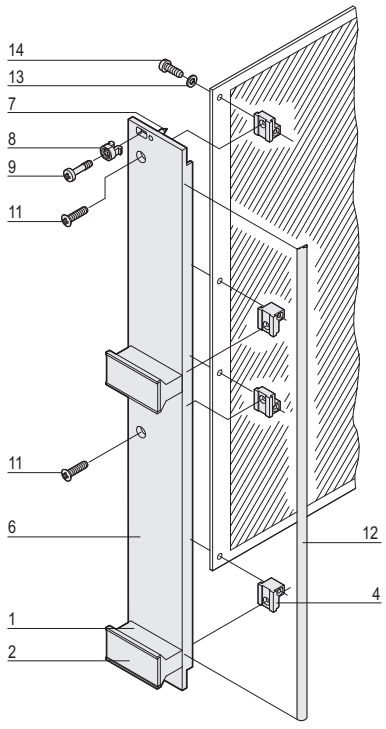

04602063

ORDER INFORMATION

Width HP	3 U Part no.	6 U Part no.
3	**20848-663**	20848-671
4	**20848-664**	**20848-672**
5	**20848-665**	**20848-673**
6	**20848-666**	**20848-674**
7	**20848-667**	20848-675
8	**20848-668**	**20848-676**
10	**20848-669**	**20848-677**
12	**20848-670**	20848-678

Plug-in units – for IEC 60297, trapeziform

KITS

PLUG-IN UNIT WITH STATIC TRAPEZIFORM HANDLE

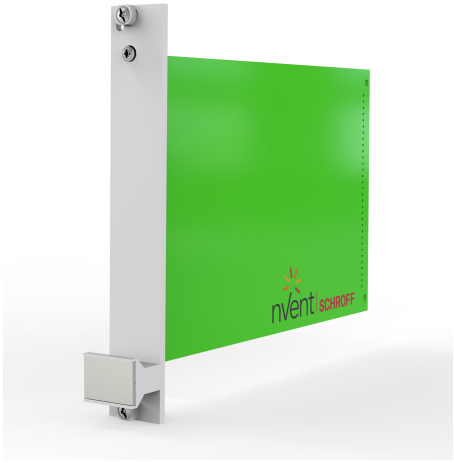

- Front panel unshielded
- Handle without extraction function
- **Plastic** Material:
  UL 94 V0, EN 45545-2, R22 - R24, HL3

3 U

Remark: Delivery do not include the PCB

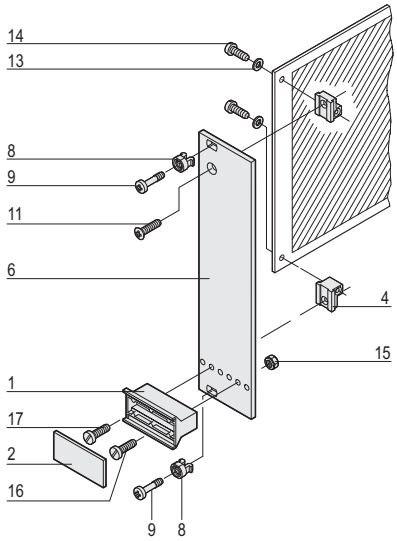

6 U

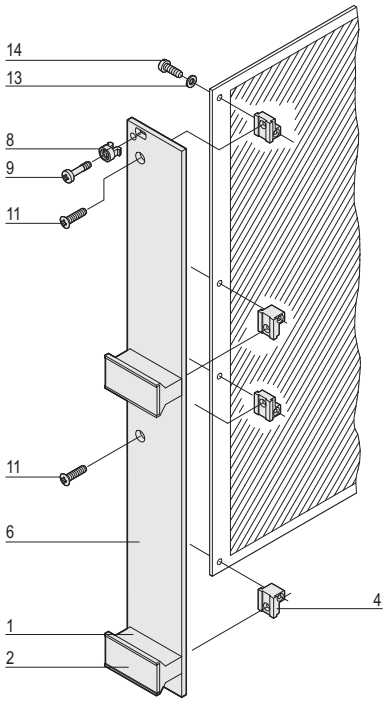

DELIVERY COMPRISES

Item	Qty		Description
	3 U	6 U	
1	1	2	Plastic handle, trapeziform, PC, grey (RAL 7035)
2	1	2	Identification plate, Al, 1.5 mm, anodised,cut edges untreated
4	2	4	Board support, die-cast zinc
6	1	1	Front panel for trapeziform handle, front anodised, rear irisdescent green chromated
8	2	2	Sleeve, PA, grey, up to 7 HP front panel width
8	4	4	Sleeve, PA, grey, from 8 HP front panel width
9	2	2	Pozidrive/slotted collar screw, St, nickel-plated, M2.5 x 12.3, front panel width up to 7 HP
9	4	4	Pozidrive/slotted collar screw, St, nickel-plated, M2.5 × 12.3, front panel width from 8 HP
11	1	2	Raised countersunk screw, St, nickel-plated, M2.5 × 8
13	2	4	Washer, A2.7
14	2	4	Pozidrive flathead screw, St, nickel-plated, M2.5 × 8
15	1	2	Hexagon nut, St, nickel-plated, M2.5
16	1	2	Pozidrive flathead screw, St, nickel-plated, M2.5 × 12
17	1	2	Pozidrive flathead screw, St, nickel-plated, M2.5 × 16

ORDER INFORMATION

Width HP	3 U Part no.	6 U Part no.
3	**20818-017**	-
4	**20818-018**	**20818-025**
5	**20818-019**	**20818-026**
6	**20818-020**	**20818-027**
7	**20818-021**	**20818-162**
8	**20818-022**	**20818-028**
10	**20818-023**	**20818-029**
12	**20818-024**	**20818-120**

Part number in bold face type: ready for despatch within 2 working days
Part number in normal type: ready for despatch within 10 working days

ORDER INFORMATION

		Front panel, U-profile, shieldable			Front panel unshielded
		Front panel, U-profile	Textile EMC gasket		
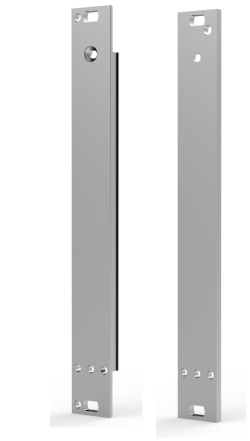 U-Profile Front panel Flat Front panel		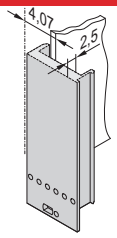 04608130 Al extrusion, front anodised, rear conductive, alignment pin pressed-in, stainless steel	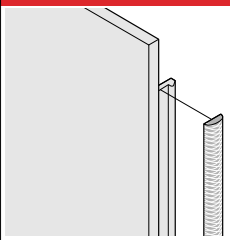 bga45760 always fixed laterally on the front panel, in the groove of the profile, textile gasket, core: foam, sleeve: textile cladding with CuNi coating, UL 94 V-0, temperature range -40 ... 70 °C		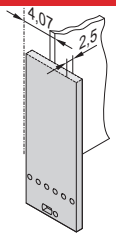 04608131 front panel, Al 2.5 mm; front anodised; rear iridescent green chromated
	Width HP	1 piece (SPQ 5)[1]	PU 10 pieces	PU 100 pieces	1 piece (SPQ 5)[1]
		3 U Height			
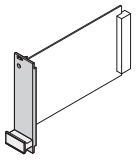 04608126	3	**30849-086**	**21101-853**	**21101-854**	**30847-602**
	4	**30849-087**			**30847-603**
	5	**30849-088**			**30847-604**
	6	**30849-089**			**30847-605**
	7	**30849-090**			**30847-606**
	8	**30849-091**			**30847-607**
	10	**30849-092**			**30847-608**
	12	**30849-093**			**30847-609**
		6 U Height			
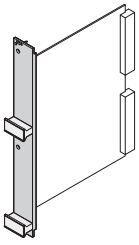 04608127	3	**30849-097**	**21101-855**	**21101-856**	**30847-625**
	4	**30849-098**			**30847-626**
	5	**30849-099**			**30847-627**
	6	**30849-100**			**30847-628**
	7	**30849-101**			–
	8	**30849-102**			**30847-630**
	10	**30849-103**			**30847-631**
	12	**30849-104**			–
Dimensions see page		7.62			7.62

1) SPQ (standard pack quantity): Part number includes 1 piece, but delivery is exclusively made in standard pack quantity (SPQ); please order at least the SPQ quantity or a multiple

Part no. includes one packing unit (PU); delivery is exclusively made in PU

ORDER INFORMATION

		Plastic handle in trapeziform			Al profile handle		
		Trapeziform handle black (RAL 9005)	Trapeziform handle light grey (RAL 7035)	Fixing clip	Handle item 20	Fixing part for Al profile handle item 21	Square nut item 22
							
		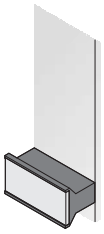 04608132	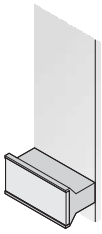 04608133	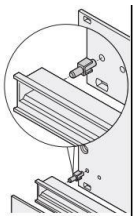	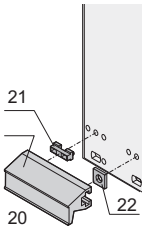	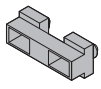 04608135	 06707050
		Handle: PC, UL 94 V0; EN 45545-2, R22- R24, HL3 Identificationplate: Al, 1.5 mm, anodized, cut edges plain; please order clip separately; 3, 4 HP each have 2 alignment pins, 5 ... 42 TE have no alignment pins; required qty: 1 handle for 3 HE 2 handles for 6 HE		clip, PPE, UL 94 V-0, black	Al extrusion, anodised; fixing part, POM, black; square nut, St, nickel-plated; at length of 1000 mm only Al extrusion	fixing part, POM, black	DIN 562, M2.5, St, nickel-plated
	Width HP	1 piece (SPQ 5)[1]	1 piece (SPQ 5)[1]	PU 100 pieces	1 piece (SPQ 10)[1]	PU 100 pieces	PU 100 pieces
		3 / 6 U Height					
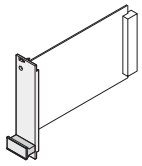	3	**20809-396**	**20809-294**	–	**20809-281**		
	4	**20809-397**	**20809-295**	–	**20809-282**		
	5	**20808-080**	**20808-003**	**21101-239**	**20809-283**		
	6	**20808-081**	**20808-060**	**21101-239**	**20809-284**		
	7	**20808-082**	**20808-061**	**21101-239**	**20809-285**		
	8	**20808-083**	**20808-062**	**21101-239**	**20809-286**		
	9	**20808-084**	**20808-063**	**21101-239**	**20809-287**		
	10	**20808-085**	**20808-004**	**21101-239**	**20809-288**	–	–
	12	**20808-086**	**20808-064**	**21101-239**	**20809-289**		
	14	**20808-087**	**20808-065**	**21101-239**	**20809-290**		
	21	**20808-088**	**20808-066**	**21101-239**	**20809-291**		
	28	**20808-089**	**20808-067**	**21101-239**	**20809-292**		
	40	**20808-090**	**20808-009**	**21101-239**	–		
	42	**20808-091**	**20808-068**	**21101-239**	**20809-293**		
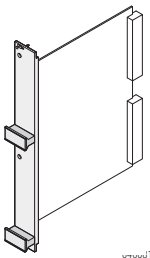 04608129	61	–	**20808-012**	–	–		
	1000 mm	–	–	–	**30809-428**	**21100-476**	**21100-359**
Fixing material see page		7.60 Item 15, 16, 17					
Dimensions see page		7.60	7.60		7.59	7.59	7.59

1) SPQ (standard pack quantity): Part number includes 1 piece, but delivery is exclusively made in standard pack quantity (SPQ);
lease order at least the SPQ quantity or a multiple

Part no. includes one packing unit (PU); delivery is exclusively made in PU

Part number in bold face type: ready for despatch within 2 working days
Part number in normal type: ready for despatch within 10 working days

PCB BRACKET FOR STATIC TRAPEZIFORM HANDLE

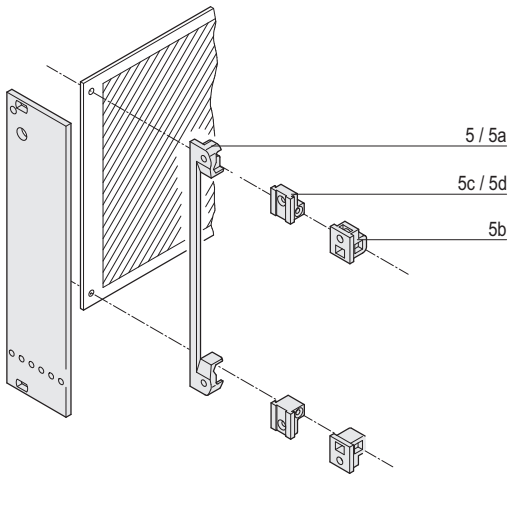

04609052

Drill hole dimensions on PCB

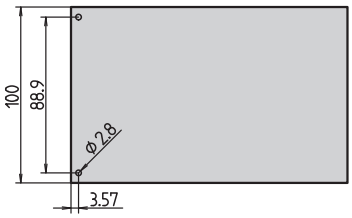

3 HE

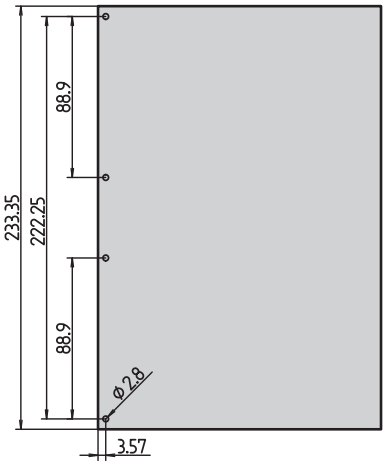

6 HE

bga43076 bga43077

	Item		Required Qty 3 U	Required Qty 6 U	Qty/PU	Part no.
PCB bracket 4 clearance holes for front panel/PCB fixing, 4 recesses for hexagon nuts; PBT, UL 94 V-0, red	5	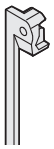	1	2	1 piece (SPQ 10)[1)]	**60807-011**
PCB bracket 4 threads M2.5 for front panel/PCB fixing, PBT, UL 94 V-0, grey, 1 piece	5a	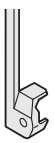 AZA45177	1	2	1 piece (SPQ 10)[1)]	**60807-211**
PCB bracket Clearance hole for front panel fixing, with recess for hexagon nut, drill hole for self-tapping screw for PCB fixing, PBT, UL 94 V-0, grey, 1 piece	5b	 AZA45177	2	4	1 piece (SPQ 10)[1)]	**60807-183**
PCB bracket 2 threads M2.5 for front panel/PCB fixing, die-cast zinc, 1 piece	5c	 06707050	2	4	1 piece (SPQ 10)[1)]	**60807-181**
PCB bracket Thread M2.5 for front panel fixing, clearance hole for PCB fixing, die-cast zinc, 1 piece	5d	 06707050	2	4	1 piece (SPQ 10)[1)]	**60807-203**

1) SPQ (standard pack quantity): Part number includes 1 piece, but delivery is exclusively made in standard pack quantity (SPQ); please order at least the SPQ quantity or a multiple

Plug-in units – for IEC 60297, trapeziform

INDIVIDUAL COMPONENTS

FIXING MATERIAL FOR STATIC TRAPEZIFORM HANDLE

3 U

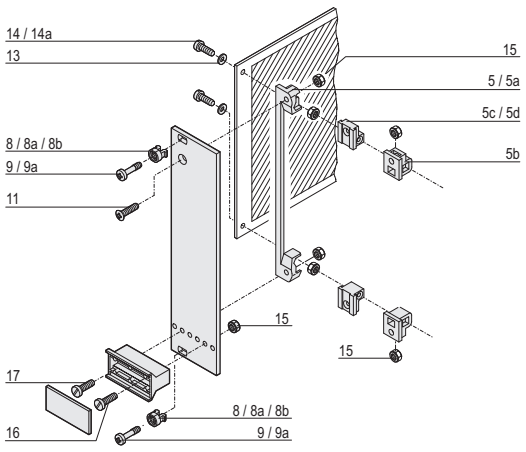

6 U

top

bottom

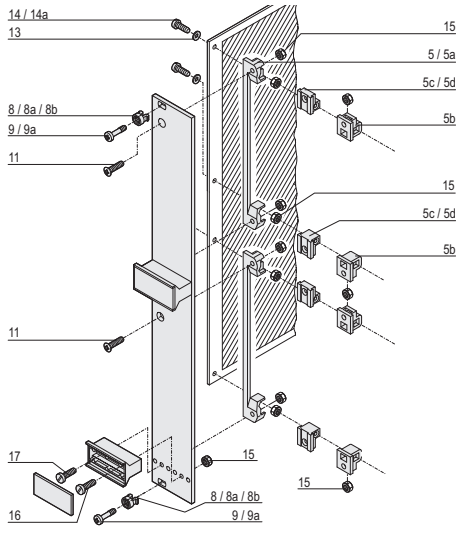

	Item		Required Qty 3 U < 8 HP	Required Qty 3 U ≥ 8 HP	Required Qty 6 U < 8 HP	Required Qty 6 U ≥ 8 HP	Qty/PU	Part no.
Plastic sleeve, for form hole 5.9 x 3.3 PA, UL 90 V-2, grey	8	 aza45933	2	4	2	4	100	**21100-464**
Metal sleeve, for form hole 5.9 x 3.3, press-in Stainless steal	8	 aza45934	2	4	2	4	100	**21100-662**
Metal sleeve, for form hole 5.9 x 3.3, to press-in Nickel-plated brass	8a	 aza45934	2	4	2	4	100	**21100-660**
Collar screws pozidrive/slot (Philips) M2.5 × 12.3, St, nickel-plated not for europacPRO and cases  AZA46586	9	 AZA46586	2	4	2	4	100	**21102-026**
Pozidrive/slotted collar screw M2.5 × 12.3, St, nickel-plated  AZA46586	9a	 AZA46586	2	4	2	4	100	**21101-101**
Raised Pozidrive countersunk screw M2.5 × 8, St, nickel-plated	11	 06702056	1	1	2	2	100	**21100-429**
Washer 2.7 DIN 125, St, nickel-plated, 100 pieces	13	 AZA46586	2	2	4	4	100	**21100-721**
Pozidrive panhead screw M2.5 × 8, nickel-plated steel if using item 13	14	 06702057	2	2	4	4	100	**21101-069**
Panhead screw, self-tapping 2.5 x 8, St, zinc-plated for items 5 and 5b	14a	 06702057	1	1	–	–	100	**21100-710**
Hexagon nut M2.5, nickel-plated steel for items 5 and 5b	15	 aza43239	4 (5) 2 (5b)	4 (5) 2 (5b)	8 (5) 4 (5b)	8 (5) 4 (5b)	100	**21100-144**
Pozidrive panhead screw M2.5 × 12, nickel-plated steel	16	 06702057	1	1	2	2	100	**21101-221**
Pozidrive panhead screw M2.5 × 16, nickel-plated steel	17	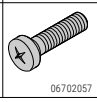 06702057	1	1	2	2	100	**21101-222**

1) SPQ (standard pack quantity): Part number includes 1 piece, but delivery is exclusively made in standard pack quantity (SPQ); please order at least the SPQ quantity or a multiple

Part number in bold face type: ready for despatch within 2 working days
Part number in normal type: ready for despatch within 10 working days

Plug-in units – for IEC 60297, trapeziform

DIMENSIONS FRONT PANELS, U PROFILE, SHIELDABLE FOR STATIC TRAPEZIFORM HANDLE

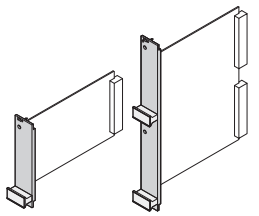

04608126 04608127

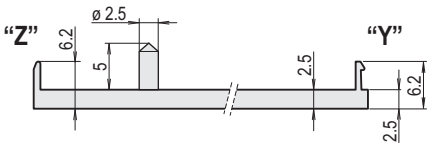

04608111

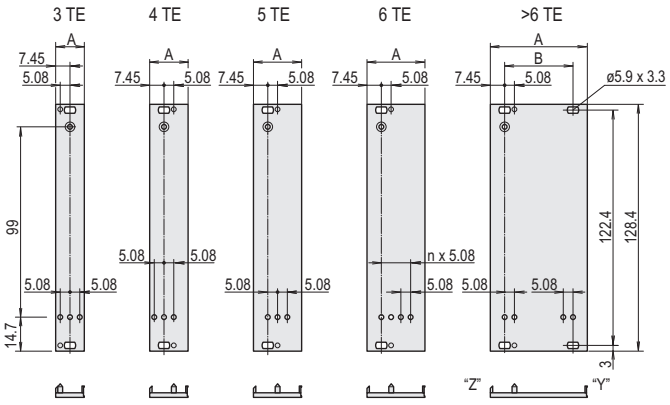

04603064

3 U

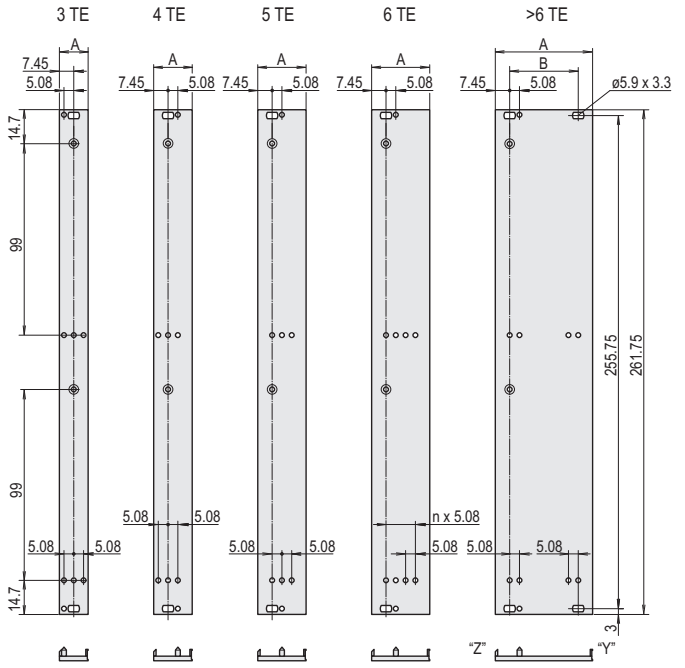

04608110

6 U

Dimensions table		
Width HP	A mm	B mm
3	14.90	-
4	19.98	-
5	25.06	-
6	30.14	-
7	35.22	-
8	40.30	25.40
10	50.46	35.56
12	60.62	45.72

DIMENSIONS FRONT PANELS FOR STATIC TRAPEZIFORM HANDLE

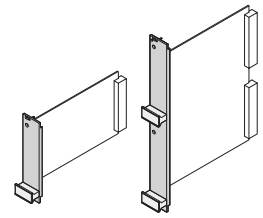

04608126 04608127

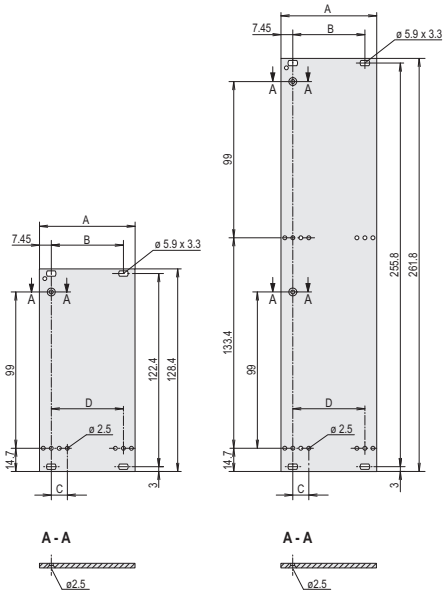

04603053

3 U 6 U

Dimensions table				
Width HP	A mm	B mm	C mm	D mm
3	14.90	-	-	-
4	19.98	-	-	-
5	25.06	-	10.16	-
6	30.14	-	-	15.24
7	35.22	-	-	20.32
8	40.30	25.40	-	25.40
10	50.46	35.56	-	35.56
12	60.62	45.72	-	45.72

Plug-in units – for IEC 60297, trapeziform

DIMENSIONS STATIC PLASTIC HANDLES, TRAPEZIFORM

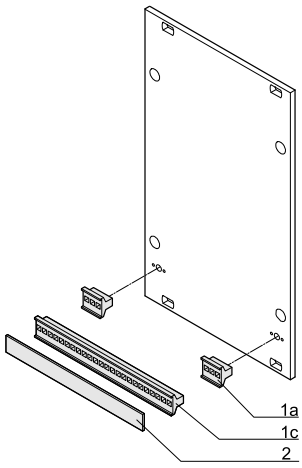

BGA46447

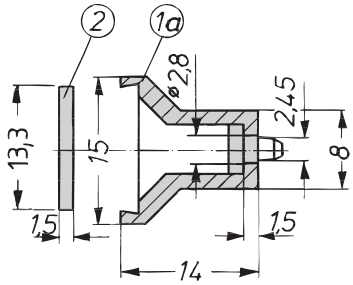

A4--328a

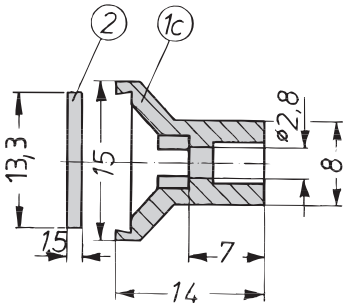

A4--328c

Dimensions table

Item	Width	Width
	HP	mm
1a	3	13.8
1a	4	18.9
1c	5	24.0
1c	6	29.0
1c	7	34.1
1c	8	39.2
1c	9	44.3
1c	10	49.4
1c	12	59.6
1c	14	69.7
1c	21	105.2
1c	28	140.8
1c	40	201.8
1c	42	212.0
1c	61	308.5

DIMENSIONS ALUMINIUM EXTRUSION HANDLES

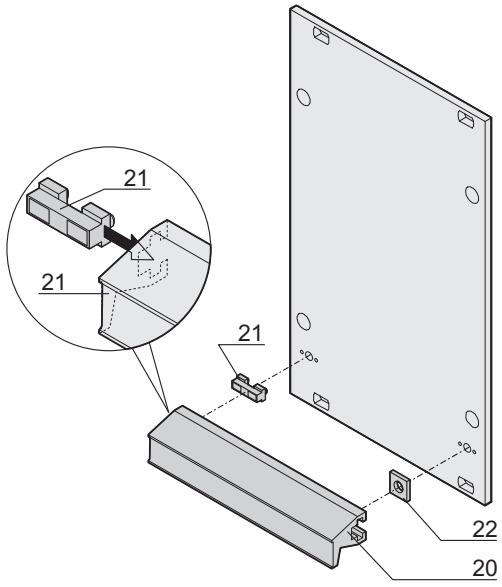

04602069

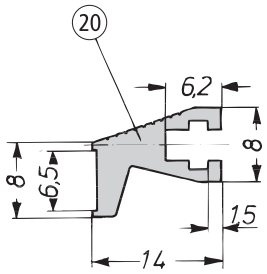

A4-328d

Dimensions table

Item	Width	Width
20	HP	mm
20	3	13.8
20	4	18.9
20	5	24.0
20	6	29.0
20	7	34.1
20	8	39.2
20	9	44.3
20	10	49.4
20	12	59.6
20	14	69.7
20	21	105.2
20	28	140.8
20	40	201.8
20	42	212.0
20	-	1000

Part number in bold face type: ready for despatch within 2 working days
Part number in normal type: ready for despatch within 10 working days

Plug-in units – with mechanical shielding

PLUG-IN UNIT WITH MECHANICAL SHIELDING, 3 U KITS

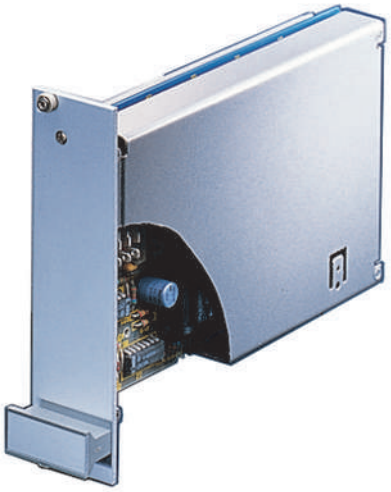

04694001

- Mechanical protection of sub-assembly
- Earthing of shielding panels possible by Faston connectors 6.3 × 0.6 mm
- For euroboards 100 × 160 mm

Handles
without extraction function

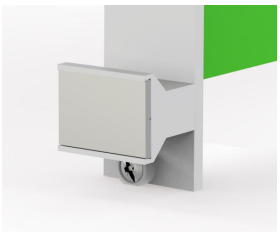

Handles
with extraction function

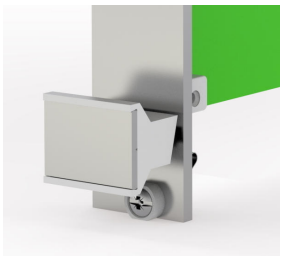

3 U KIT, SHIELDING COMPONENT SIDE

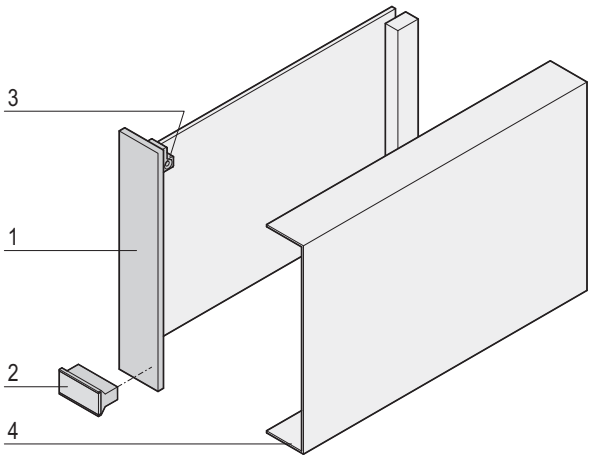

04602077

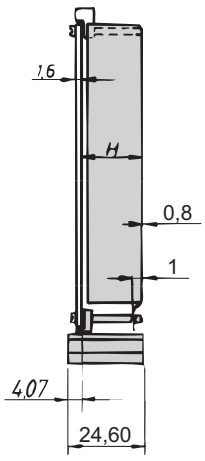

a4-237

- Usable connectors in accordance with EN 60603 (DIN 41612): Construction type B, C, D, F, H, R;

DELIVERY COMPRISES

Item	Qty	Description
4	1	Shielding panel component side for 6 HP front panel width, stainless steel, 0.8 mm

ORDER INFORMATION

Description		Part No.
Shielding panel component side	for 6 HP front panel width, stainless steel, 0.8 mm	**20809-371**

3 U KITS, BOTH SIDES SHIELDED (SOLDER/COMPONENT SIDE)

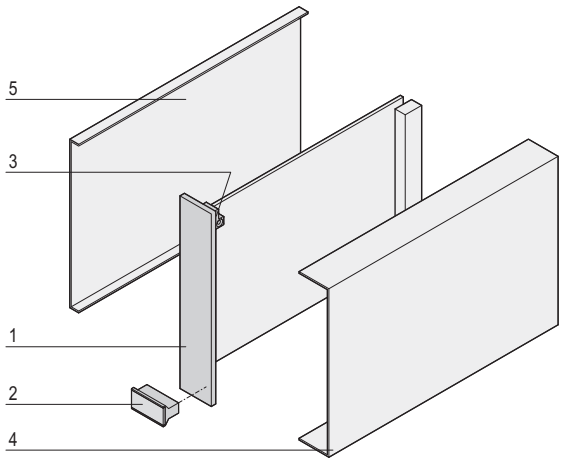

04602078

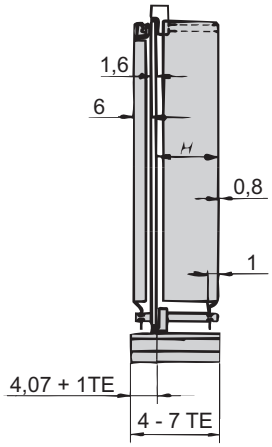

a4-236a

- Usable connectors in accordance with EN 60603 (DIN 41612): Construction type B, C, D, F, H, R;

DELIVERY COMPRISES

Item	Qty	Description
5	1	Shielding panel on solder side, stainless steel, 0.8 mm

ORDER INFORMATION

Description		Part no.
Shielding panel on solder side,	stainless steel, 0.8 mm	**30809-571**

Part number in bold face type: ready for despatch within 2 working days
Part number in normal type: ready for despatch within 10 working days

PCB COVER FOR EUROBOARDS

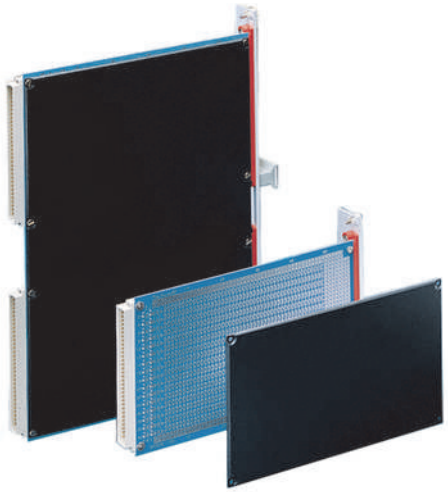

11092008

- Mechanical protection of the solder side

ORDER INFORMATION

Description	Qty	Part no.
PCB cover (thickness 0.9 mm) for euroboards (100 x 160 mm), PBT, black, max. operating temperature without permanent deformation 55 °C	1 piece (SPQ 10)	**61000-007**
PCB cover (thickness 0.9 mm) with similar temperature expansion coefficients to FR4 PCB; for euroboards (100 x 160 mm), LCP, UL 94 V-0, white, max. operating temperature without permanent deformation 85 °C	1 piece (SPQ 10)	**61000-177**
PCB cover for double euroboards (233.35 x 160 mm), PP, UL 94 V-0, black	1 piece (SPQ 10)	**61000-012**
Slotted flathead screw M2.5 x 6, height of head 1.2 mm, PU 100 pieces		**21102-007**
Slotted flathead screw M2.5 x 12, height of head 1.2 mm, PU 100 pieces		**21102-008**

SPQ (standard pack quantity): Part number includes 1 piece, but delivery is exclusively made in standard pack quantity: please order at least 10 pieses of PCB covers or a multiple

For PCBs 100 x 160 mm

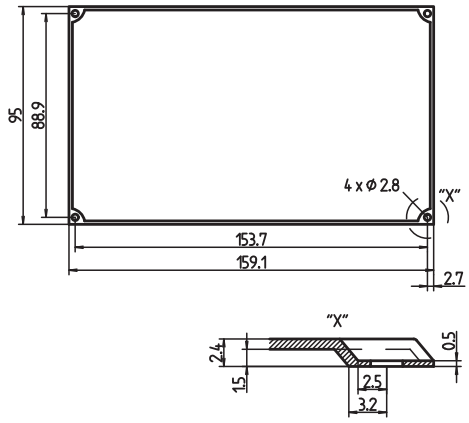

LKA40520

For PCBs 233.35 x 160 mm

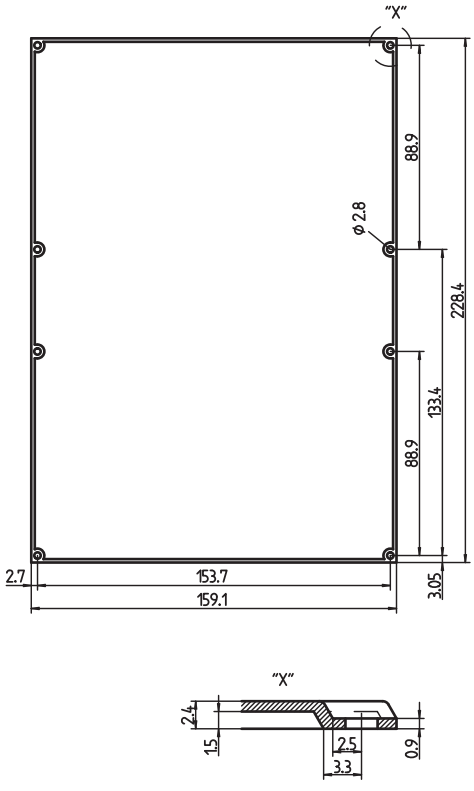

LKA30451

PCB COVER FOR COMPACTPCI

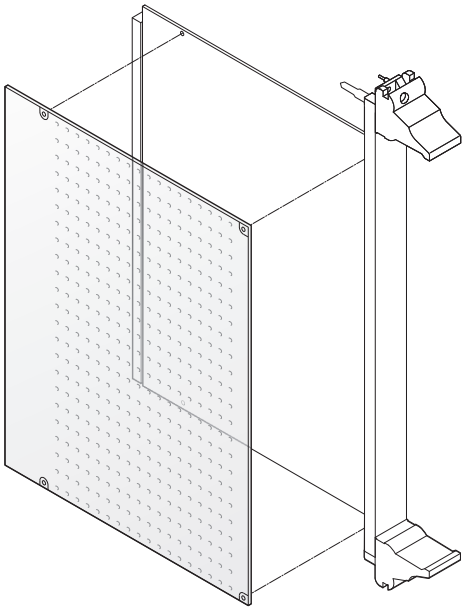

12303051

- Mechanical protection of solder side
- Cover is perforated for better cooling of components

DELIVERY COMPRISES

Item	Qty	Description
1	1	Cover, plastic, 0.5 mm, antistatic, perforated, UL 94 V-0; max. operating temperature 65 °C, max. continuous operating temperature 55 °C

ORDER INFORMATION

Height U	Depth mm	Part no.
6	80	24579-039
3	160	**24579-037**
6	160	**24579-038**
Fixing clips PU 100 pieces		21101-914

NOTE

- Fixing clips are required for mounting the perforated covers; please order separately

Part number in bold face type: ready for despatch within 2 working days
Part number in normal type: ready for despatch within 10 working days

North America

Warwick, RI, USA
Tel +1.401.738.1722
San Diego, CA, USA
Tel +1.858.740.2400

Europe, Middle East & India

Straubenhardt, Germany
Tel +49 7082 794 0
Betschdorf, France
Tel +33 3 88 90 64 90
Warsaw, Poland
Tel +48 22 209 98 35
Hemel Hempstead,
Great Britain
Tel +44 1442 24 04 71
Lainate, Italy
Tel +39 02 932 714 1
Dubai, United Arab Emirates
Tel +971 4 82 38 666
Bangalore, India
Tel +91 80 6715 8900
Istanbul, Turkey
Tel +90 541 368 0941

Asia Pacific

Shanghai, China
Tel +86 21 2412 6943
Singapore
Tel +65 6768 5800
Shin-Yokohama, Japan
Tel +81 45 476 0271

Our powerful portfolio of brands:

CADDY ERICO HOFFMAN RAYCHEM SCHROFF TRACER

nVent

nVent.com/SCHROFF

©2018 nVent. All nVent marks and logos are owned or licensed by nVent Services GmbH or its affiliates. All other trademarks are the property of their respective owners.
nVent reserves the right to change specifications without notice.