E40546

Gasket

SEAL RING FKM DN100

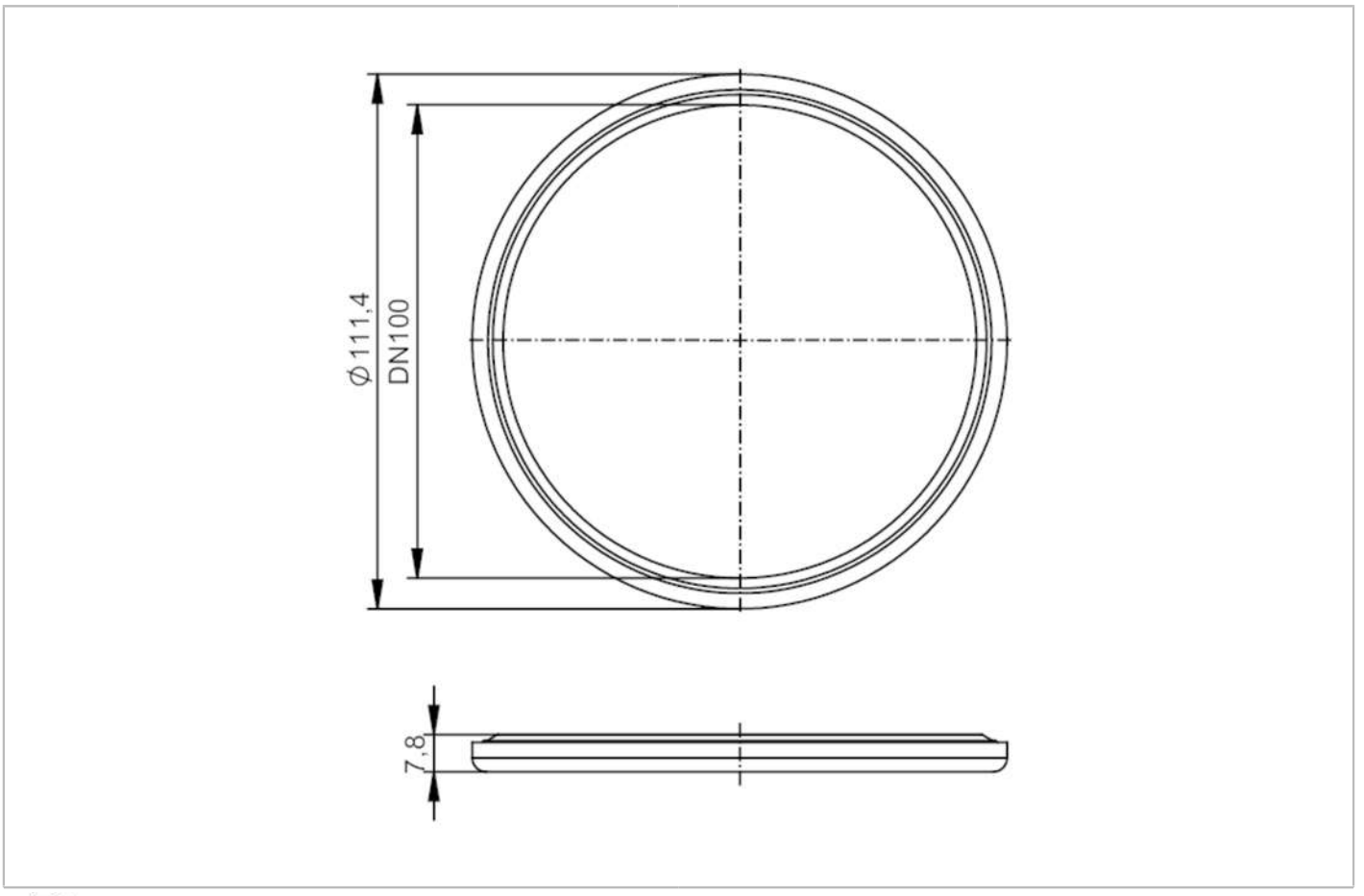

EC 1935/2004

Application		
Design		for volumetric flow meters SMF
Application		food and beverage industry; hygienic systems
Mechanical data		
Weight	[g]	46.35
Materials		FKM
Nominal diameter		DN100 (4“)
Remarks		
Pack quantity		2 pcs.