IM506A

Inductive sensor

IME3020BFPKG/3D

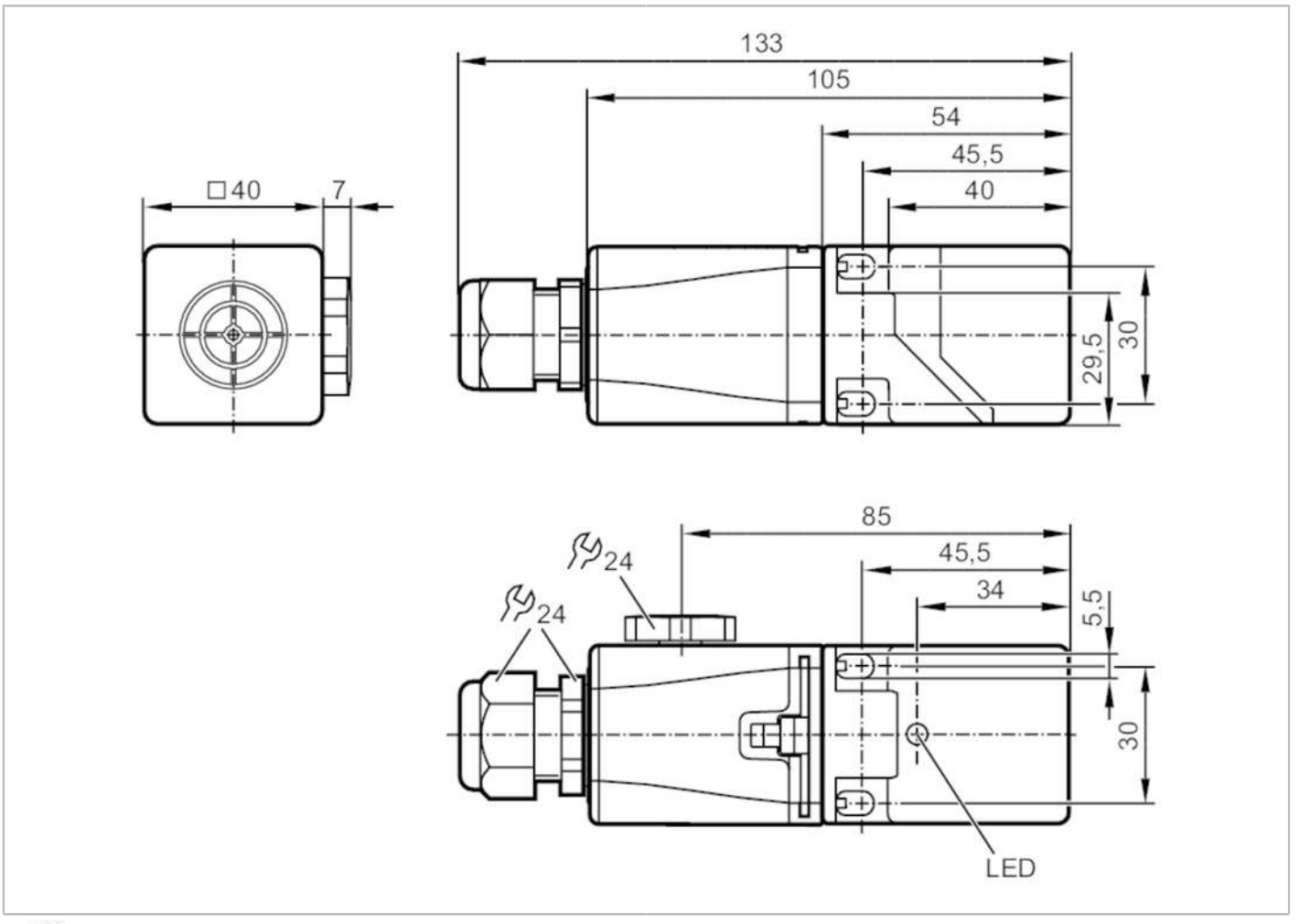

Product characteristics		
Output function		normally open / normally closed; (selectable)
Sensing range	[mm]	20
Housing		rectangular
Dimensions	[mm]	40 x 40 x 105
Electrical data		
Operating voltage	[V]	10...30 DC
Current consumption	[mA]	< 15
Protection class		III
Reverse polarity protection		yes
Outputs		
Output function		normally open / normally closed; (selectable)
Max. voltage drop switching output DC	[V]	2.5
Max. leakage current	[mA]	0.5
Permanent current rating of switching output DC	[mA]	200
Switching frequency DC	[Hz]	100

IM506A

Inductive sensor

IME3020BFPKG/3D

Short-circuit proof		yes	
Overload protection		yes	
Detection zone			
Sensing range	[mm]	20	
Real sensing range Sr	[mm]	20 ± 10 %	
Operating distance	[mm]	0...16.2	
Accuracy / deviations			
Correction factor		steel: 1 / stainless steel: 0.7 / brass: 0.4 / aluminium: 0.3 / copper: 0.2	
Hysteresis	[% of Sr]	1...20	
Switch point drift	[% of Sr]	-10...10	
Operating conditions			
Ambient temperature	[°C]	-20...60	
Protection		IP 65; IP 67	
Tests / approvals			
ATEX marking		II 3D Ex tc IIIC T95°C Dc X	
EMC		EN 60947-5-2	
MTTF	[years]	1326	
Mechanical data			
Weight	[g]	243.5	
Housing		rectangular	
Mounting		flush mountable	
Dimensions	[mm]	40 x 40 x 105	
Materials		PC; PA; stainless steel	
Displays / operating elements			
Display		switching status	1 x LED, yellow
Remarks			
Remarks		Recommendation: Check the safe functioning of the unit after a short circuit.	
		5 positions of the active zone possible	
Pack quantity		1 pcs.	

IM506A

Inductive sensor

IME3020BFPKG/3D

Electrical connection

terminals: 0.34...1.5 mm²; Cable sheath: Ø 5...9 mm

Connection

