

Image may differ from product. See technical specification for details.

HM 3068

Lock nut with metric trapezoidal thread, for locking by clip

HM lock nuts are used to locate bearings onto a shaft. They have metric trapezoidal threads and eight equally spaced slots located around their circumference to accommodate an impact spanner. They should be locked by a locking clip to prevent unintentional loosening. HM lock nuts can be reused, provided they are not damaged.

- Simple, stable and reliable fastening element
- Easy to install and remove
- Reusable with new locking clip
- Available for thread Tr 220x4 to Tr 1120x8 (sizes 44 to /1120)

Overview

Dimensions

Thread designation	Tr 340x5
Bore diameter	340 mm
Outside diameter	400 mm
Width	45 mm

Properties

Locking device	Locking clip
Nut for hydraulic mounting	No
Associated mounting tool	TMFN 52-64

Logistics

Product net weight	9.75 kg
eClass code	23-11-07-05
UNSPSC code	31163218

Technical specification

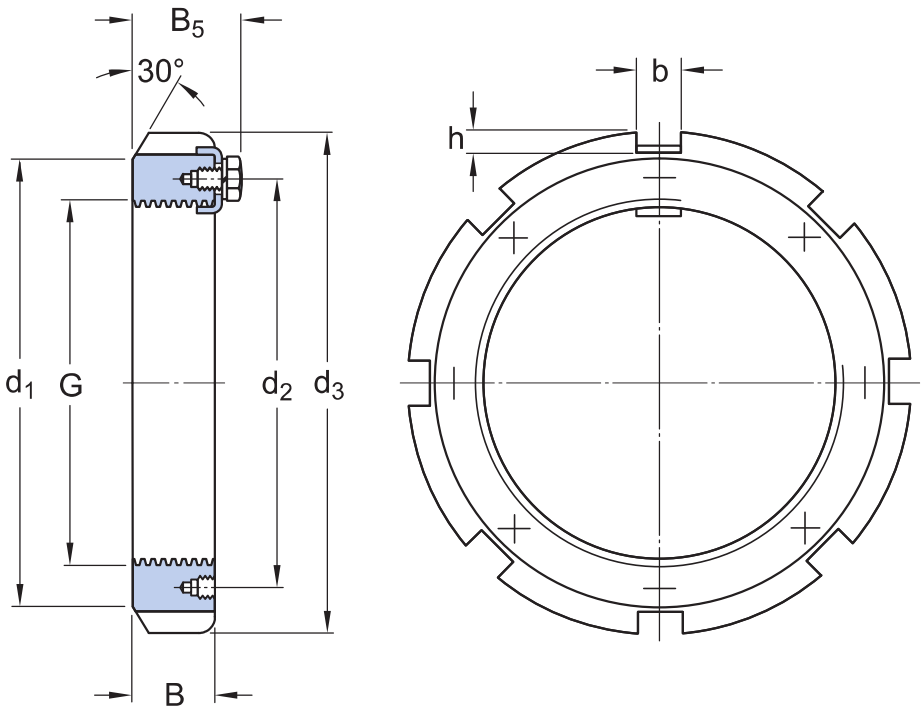

Dimensions

G	Tr 340x5	Thread
d_3	400 mm	Outside diameter
B	45 mm	Width
d_1	376 mm	Diameter locating side face
d_2	356 mm	Pitch diameter threaded holes for locking clip
B_5	58 mm	Width including locking clip
b	24 mm	Width locating slot
h	12 mm	Depth locating slot

Mounting information

Associated spanner	TMFN 52-64

Associated products

Locking device	MS 3068-64

Compatible products

Recommended product

Locking clip for metric lock nuts	MS 3068-64

Recommended tool

Impact Spanner, size 64-80	TMFN 64-80

More Information

Product details

- Designs and variants
- General product specifications
- Installation and removal
- Designation system

Tools

- Digital Tools

Terms of use

By accessing and using this website / app owned and published by AB SKF (publ.) (556007-3495 · Gothenburg) (“SKF”), you agree to the following terms and conditions:

Warranty Disclaimer and Limitation of Liability
Although every care has been taken to assure the accuracy of the information on this website / app, SKF provides this information "AS IS" and DISCLAIMS ALL WARRANTIES, EXPRESS OR IMPLIED, INCLUDING, BUT NOT LIMITED TO, IMPLIED WARRANTIES OF MERCHANTABILITY AND FITNESS FOR A PARTICULAR PURPOSE. You acknowledge that your use of this website / app is at your sole risk, that you assume full responsibility for all costs associated with use of this website / app, and that SKF shall not be liable for any direct, incidental, consequential, or indirect damages of any kind arising out of your access to, or use of the information or software made available on this website / app.

Any warranties and representations in this website / app for SKF products or services that you purchase or use will be subject to the agreed upon terms and conditions in the contract for such product or service.

Further, for non-SKF websites / apps that are referenced in our website / app or where a hyperlink appears, SKF makes no warranties concerning the accuracy or reliability of the information in these websites / apps and assumes no responsibility for material created or published by third parties contained therein. In addition, SKF does not warrant that this website / app or these other linked websites / apps are free from viruses or other harmful elements.

Third Party Services
When viewing YouTube content via the SKF website(s) (i.e. using YouTube API Services), you agree to be bound by the YouTube Terms of Service.

Copyright
Copyright in this website / app copyright of the information and software made available on this website / app rest with SKF or its licensors. All rights are reserved. All licensed material will reference the licensor that has granted SKF the right to use the material. The information and software made available on this website / app may not be reproduced, duplicated, copied, transferred, distributed, stored, modified, downloaded or otherwise exploited for any commercial use without the prior written approval of SKF. However, it may be reproduced, stored and downloaded for use by individuals without prior written approval of SKF. Under no circumstances may this information or software be supplied to third parties.

This website /app includes certain images used under license from Shutterstock, Inc.

Trademarks and Patents
All trademarks, brand names, and corporate logos displayed on the website / app are the property of SKF or its licensors, and may not be used in any way without prior written approval by SKF. All licensed trademarks published on this website / app reference the licensor that has granted SKF the right to use the trademark. Access to this website / app does not grant to the user any license under any patents owned by or licensed to SKF.

Changes
SKF reserves the right to make changes or additions to this website / app at any time.