Pluto Safety PLC

With dynamic safety concept.

Pluto/Gateway/Encoder

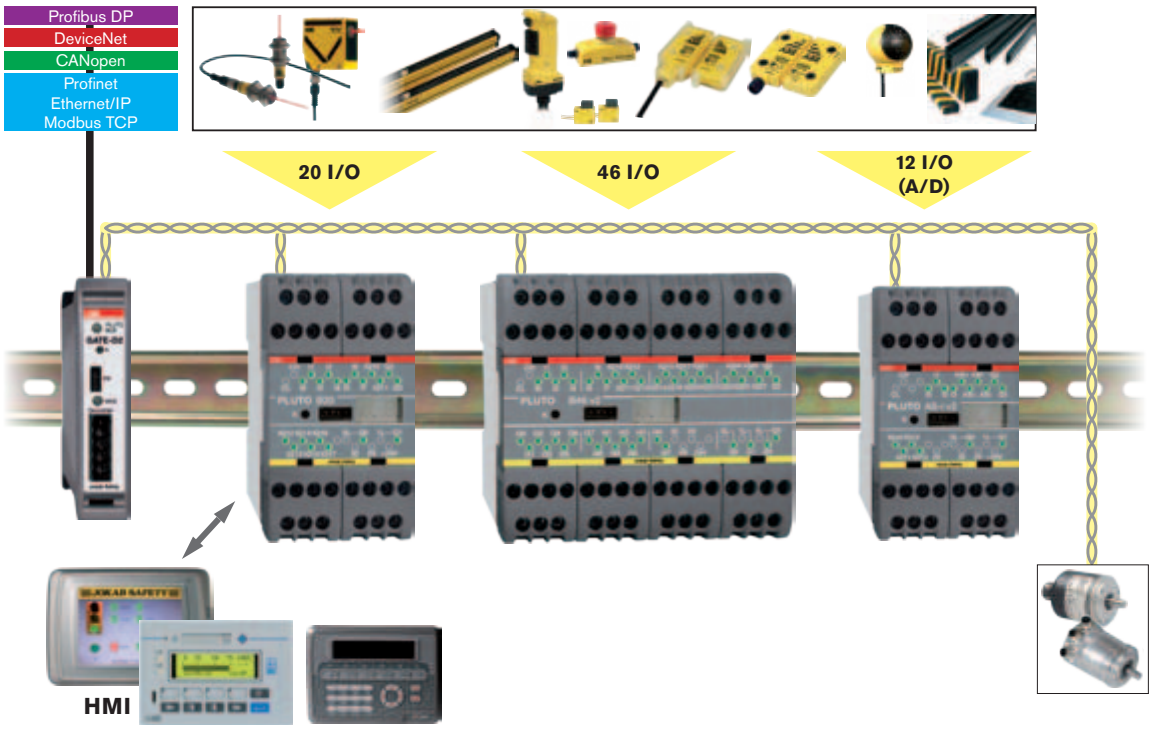

Contents Page

Why you should use the Pluto safety PLC ***2:2***

Pluto safety PLC ***2:6***

- Pluto without databus ***2:8***
- Pluto with databus ***2:12***
- Certification ***2:15***
- Example – Robot cell with Pluto ***2:16***

Pluto gateway

- Gate P2-Profibus DP ***2:24***
- Gate D2-DeviceNet ***2:26***
- Gate C2-CANOpen ***2:28***
- Gate E2-Profinet, Ethernet/IP, Modbus TCP ***2:30***

Safe Encoder ***2:32***

Descriptions and examples in this book show how the products work and can be used. This does not mean that they can meet the requirements for all types of machines and processes. The purchaser/user is responsible for ensuring that the product is installed and used in accordance with the applicable regulations and standards. We reserve the right to make changes in products and product sheets without previous notice. For the latest updates, refer to www.abb.com/lowvoltage. 2012.

Why you should have Pluto safety PLC's.

– for simplifying the design of and changes to safety systems!

Pluto is an ”All-Master” safety PLC concept, that simplifies the design of safety systems and achieves the highest safety level PL e according to EN ISO 13849-1 and SIL 3 according to EN 62061 and EN 61508. The key difference between Pluto and conventional safety PLC´s is that there is no "Master-Slave" relationship between the control units connected to the safety bus. Each Pluto is a 'Master' unit and can see the other Plutos' inputs and outputs, and can thereby make decisions about its own safety environment.

This concept enables simple communication, programming and changes to the safety system. With the use of a 'Gateway' device, a Pluto can communicate with other bus systems and thereby form part of a larger network. Gateway units are available for several different bus systems, such as Profibus, CanOpen, DeviceNet, Profinet, Ethernet/IP and Modbus TCP. With a Pluto AS-i, both safety slaves and standard slaves can be handled.

Pluto offers an economic solution for both single machines and for major machine systems.

Our solution with All-Master

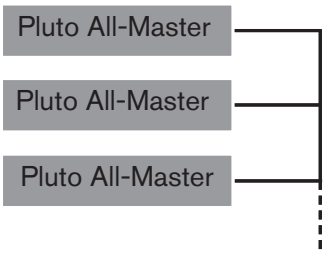

Traditional safety PLC

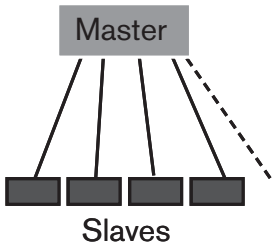

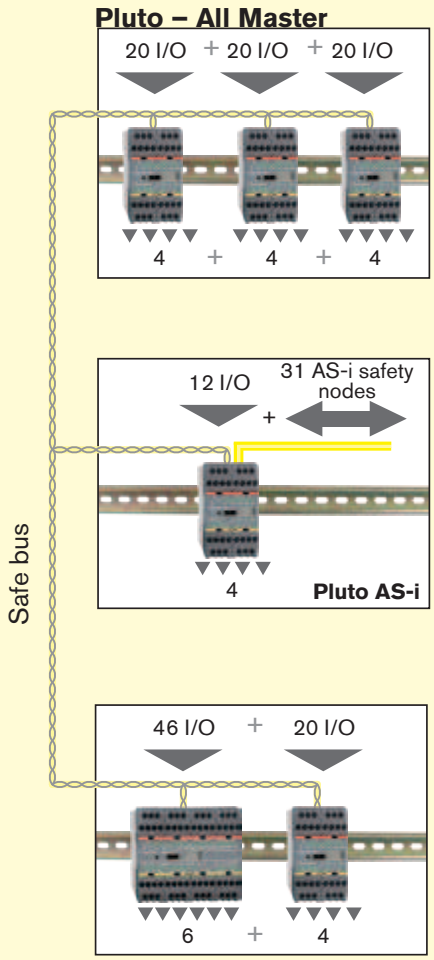

– to supervise safety devices!


Light beams


Light grids/curtains

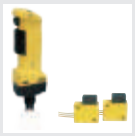
3-position devices


Sensors/ switches

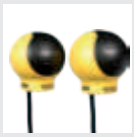
Two-hand controls


Emergency stops

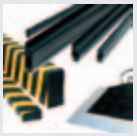
Strips

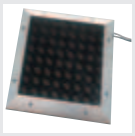
Mats

Most safety devices on the market can be connected directly to Pluto units. By using dynamic signals with sensors from ABB Jokab Safety only one input is needed to achieve the highest level of safety, compared to two inputs for other manufacturers' PLCs. It is also possible to connect up to 10 sensors in series to a single input on Pluto and still achieve the highest level of safety. For example non-contact Eden sensors, Spot light beams and Tina emergency stop buttons can all be connected in series to a single Pluto input. Even mechanical switches can be connected to the 'dynamic' safety circuit using ABB Jokab Safety's various Tina adapters. Pluto also has IO connections that can be used as both inputs and outputs.

– to save on inputs!

Dynamic signals
1–10 doors with one Eden per door
PL e

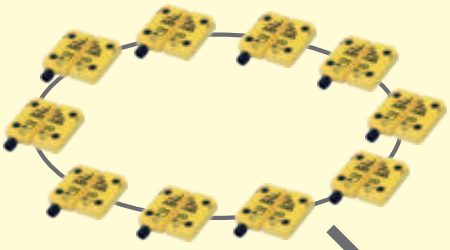

Dynamic signals
1-10 sensors
PL e

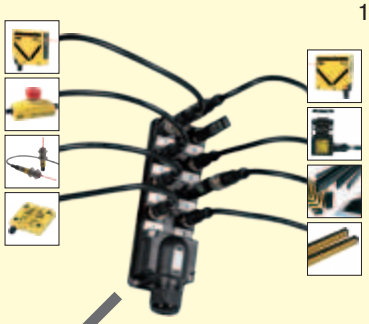

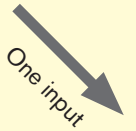

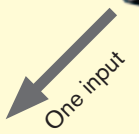

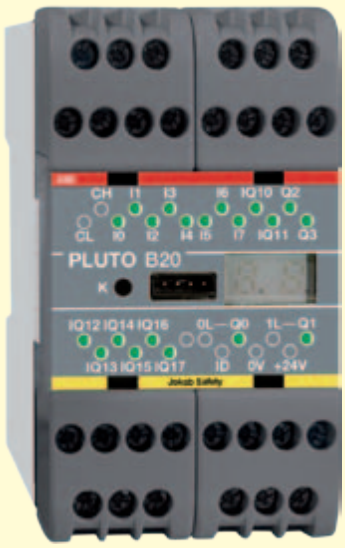

Pluto
has inputs for static and dynamic sensors. Several sensors can be connected to one dynamic input in accordance with PL e.



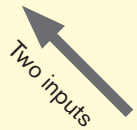

IO connections
Pluto has IO connections that can be used in three ways:
- input
- output
- both input and output at the same time (e.g. for a reset button with lamp indication)

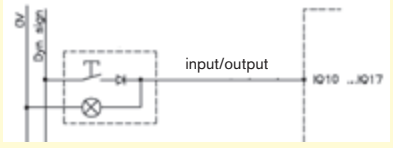

Static inputs (mechanical switches)
2 for each door = PL e



Pluto with a safety bus

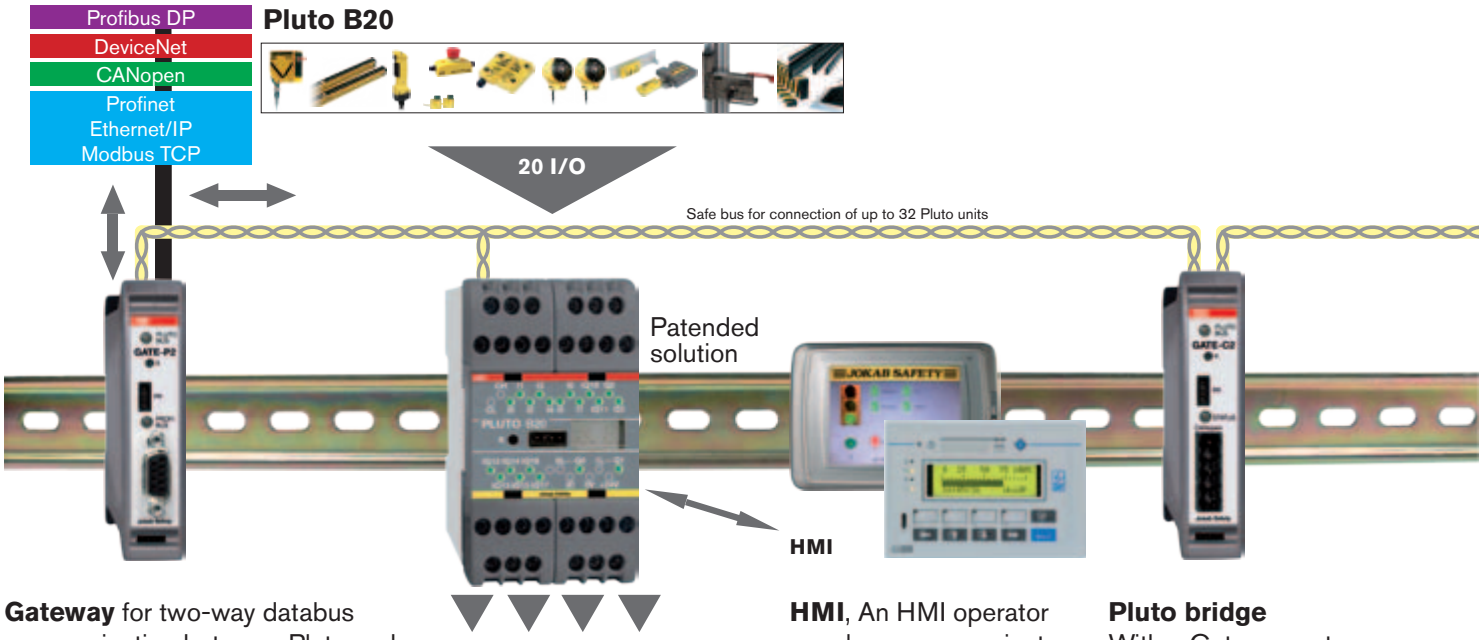

Gateway for two-way databus communication between Pluto and other control systems.

4 independent failsafe safety outputs

Pluto is an All-Master-System for dynamic and static safety circuits where the inputs and other information are shared on a databus. Several safety sensors can be connected to one input while still achieving the highest level of safety. Pluto has inputs for all safety devices on the market, and the Pluto Manager software selects how each input shall respond.

HMI, An HMI operator panel can communicate with Pluto in both directions. Connection can be made via the bus or direct to the front of the Pluto. The interface is RS232 and the protocol is Modbus ASCII 8 bit.

Pluto bridge
With a Gateway set up as a Pluto bridge, it is possible to:

- increase the databus length
- use different databus speeds for each section
- filter information from one section to reduce the databus loading on other sections.

Pluto without a safety bus – Singel-Pluto

A single Pluto can be used as a fully programmable safety logic controller.

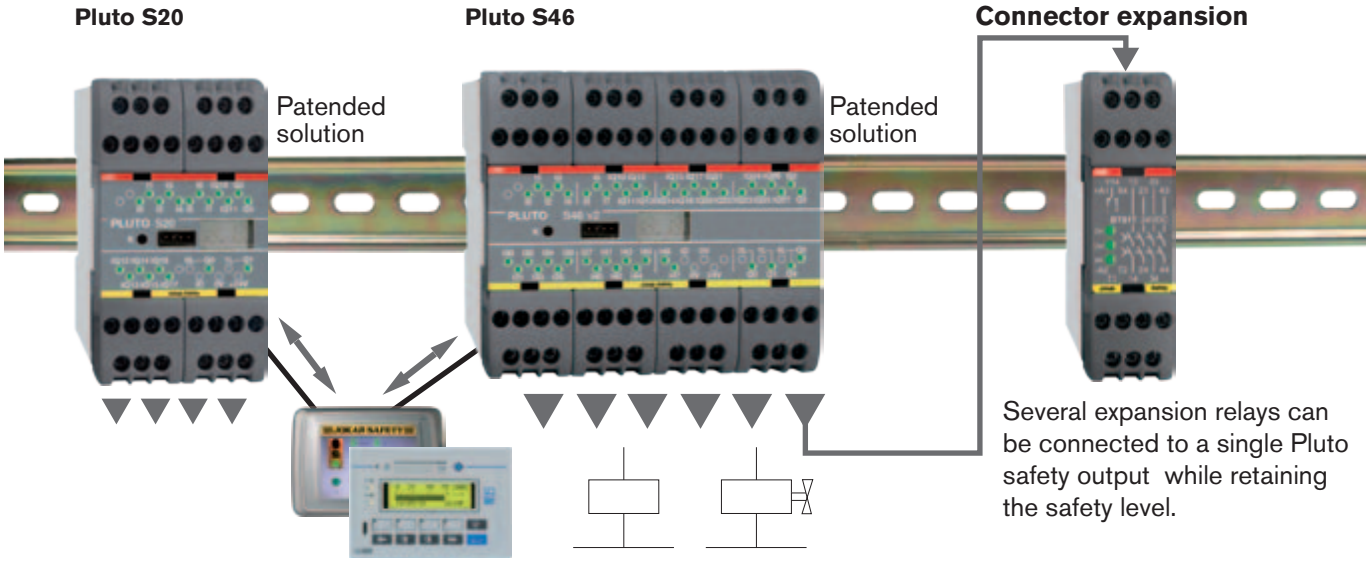

Several expansion relays can be connected to a single Pluto safety output while retaining the safety level.

Pluto without a bus connection is available in two sizes, with 20 and 46 I/O , the S20 and S46 respectively. In other words, they are similar to the equivalent versions with bus connections, the B20 and B46.

Pluto B46

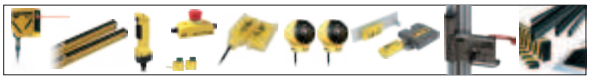

Pluto AS-i

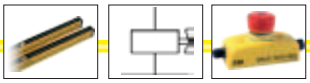

46 I/O

Safe bus

Safety Monitor/Master

12 I/O (A/D) + 31 AS-i safety slaves

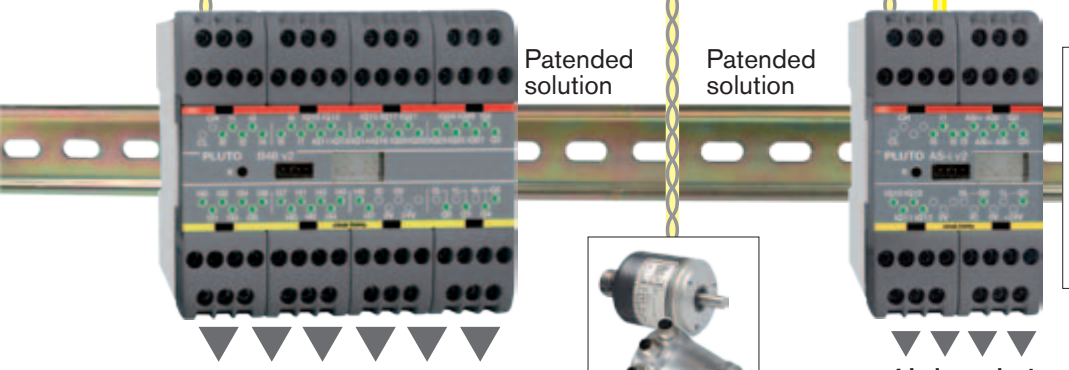

Patended solution

Patended solution

6 independent failsafe safety outputs

4 independent failsafe safety outputs

Approvals
EN 954-1, Category 4
EN ISO 13849-1, PL e
EN 61496-1, Type 4
EN 61508, SIL 3
EN ISO 62061, SIL 3
EN ISO 60204-1
EN 50178
EN ISO 574, Type IIIc

Absolute encoder.
8 single turn or multi turn absolute encoders can be connected directly to the safety bus.

Pluto AS-i is an AS-i module which can be connected to a AS-i bus. It can either be AS-i master on the bus or work together with an AS-i master as monitor. It includes AS-i nodes, analogue and digital outputs, as well as safety outputs.



IDFIX - identifies Pluto

IDFIX is a identification circuit that is unique to each device on the Pluto bus. It includes an identification code and makes it possible to distribute a PLC program in the network. There are four different versions: R, RW, DATA and PROG. IDFIX PROG also has the current PLC program. If the Pluto PLC module needs to be replaced, all the information on this is held in memory at IDFIX.

Overview Pluto Safety-PLC

Model	S20	S46	A20	B16	B20	B46	AS-i	B42 AS-i
Number of I/O	20	46	20	16	20	46	12	42
Failsafe inputs	8	24	8	8	8	24	4	20
Failsafe inputs or non-failsafe outputs	8	8	8	8	8	8	4	16
Analog inputs	1	3	1	1	1	3	4	3
Failsafe relay outputs	2	4	2	-	2	4	2	4
Failsafe transistor outputs	2	2	2	-	2	2	2	2
Pluto bus	-	-	●	●	●	●	●	●
Current monitoring	-	-	2	-	-	-	-	-
Dimensions (b x h x d) mm	45 x 84 x 118	90 x 84 x 118	45 x 84 x 118	45 x 84 x 118	45 x 84 x 118	90 x 84 x 118	45 x 84 x 118	90 x 84 x 118
Supply voltage	24VDC	24VDC	24VDC	24VDC	24VDC	24VDC	24VDC	24VDC

Safety PLC

Pluto

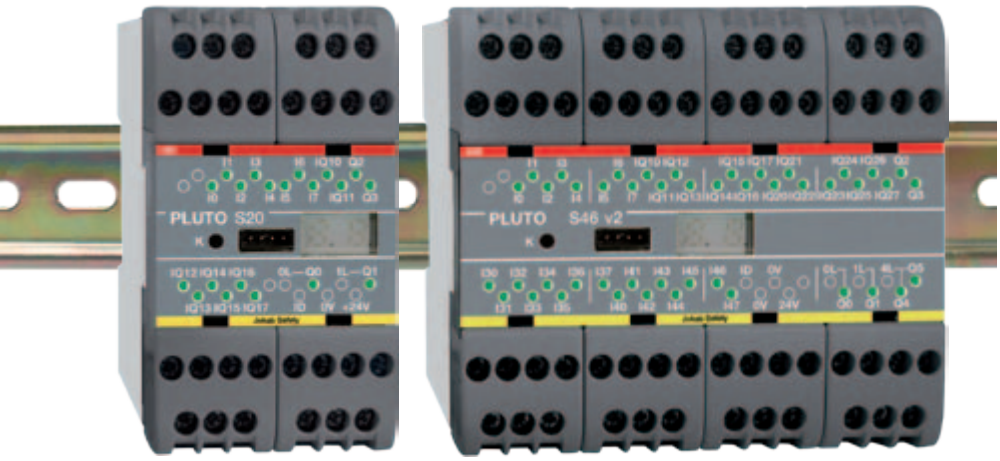

Pluto Safety PLC facilitates the design of your safety systems

Pluto is an All-Master system for dynamic and static safety circuits where inputs and other information are shared over the bus. Multiple safety sensors can be connected to a single input and still achieve the highest level of safety. Pluto has inputs suited for every safety product on the market, and each input function is configured in the accompanying software Pluto Manager.

Besides failsafe inputs (I) Pluto has a number of failsafe relay and transistor outputs (Q). On every Pluto unit there is also a possibility of using a number of terminals as failsafe inputs, non-failsafe outputs or both in and output simultaneously (IQ). The characteristics of the terminals are easily configured in Pluto Manager.

Safety in large and small systems

Pluto models without bus communication are stand alone units and are therefore perfectly suited for smaller systems that do not require communication with other Pluto units or gateways. Pluto models with bus communication can be connected to the Pluto bus where up to 32 Pluto units can interact and control large as well as small safety systems. The fact that Pluto is an All-Master system means that each Pluto unit controls their outputs locally, while it is as easy to read other Pluto units' inputs as their own.

Specifically for Pluto A20 is that it is equipped with an analogue input for current measurement, which can be used for e.g. monitoring of muting lamps.

Pluto is primarily designed to satisfy the requirements of EU Machinery Directive (2006/42/EG) regarding safety in control systems, but the system can also be used in other areas as in the process industry, boiler plants etc which have similar requirements.

Approvals:

TÜV Rheinland

Control of:

Safety products in dynamic and static circuits

Electrically controlled actuators such as contactors, valves, motors

Indicators and buttons

Features:

A Safety-PLC for each system part

Dispersed constructions of machines

Great flexibility

Up to 10 sensors in series connected to one input

Software Pluto Manager free of charge

Handles conventional circuit breakers as well as dynamical sensors

Custom made safety bus

Dynamic signal

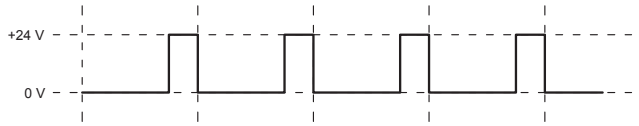

A dynamic signal makes it possible to achieve the highest level of safety with only one conductor. By transmitting a square wave and then evaluating the signal when it comes back to the controller you achieve the redundancy required. The signal is inverted once at each safety sensor (if the protection is OK) which makes it possible to detect short circuits across a sensor. When the signal switches between high (+24 V) and low (0V) it can be evaluated and tested about 200 times per second.

Pluto can generate three unique dynamic signals; A pulse, B pulse or C pulse. Short circuits between two different dynamic signals are detected whenever the signal that is created is different from the expected signal in Pluto. The kind of signal Pluto expects at the input terminal is determined in Pluto Manager (A, B or C pulse and if the signal should be inverted or not).

Static signal

Static signals (+24 V or 0 V) can be connected to all inputs on Pluto. The kind of signal Pluto expects at the input terminal is determined in Pluto Manager. To achieve a two-channel structure according to EN ISO 13849-1 you need two inputs.

OSSD-signal

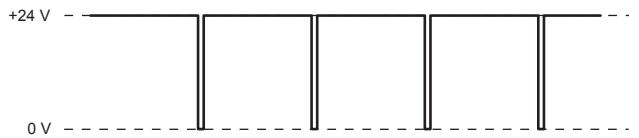

There are safety products with internal monitoring of dual OSSD signals (the device detects its own faults rather than Pluto doing this). From these devices, at least one of the two signals is connected to an I-input in Pluto, i.e. both signals must not be connected to the IQ-terminals. The terminal blocks are then configured in Pluto Manager to expect static inputs (OSSD signals are filtered internally in Pluto).

IQ – individual failsafe inputs and non-failsafe outputs

The IQ terminals can be used either as individual failsafe input or non-failsafe output (e.g. for indicator light or status signal). The terminal blocks can also be used as both input and output simultaneously, which is useful for example for push buttons (input) with indicator light (output). This function is designed primarily for reset buttons to reduce the number of used terminal blocks on the controller.

I - individual failsafe inputs

All inputs are individually failsafe as each input is connected separately to both processors in Pluto. In order to maintain the redundancy required for two-channel structure and the highest level of safety, the dynamic signal must be used. When using static signals, two inputs must be used to achieve two-channel structure. The expected signal to the terminals blocks is determined in Pluto Manager (static or dynamic signal).

Q - individual failsafe outputs

All Q outputs are individually safe and are independently programmable. There are both relay outputs and transistor outputs.

Transistor outputs (-24 VDC)

The transistor outputs are just like the relay outputs, that is individually safe and independently programmable. However, the transistor outputs are different from the relay outputs as the internal connection provides the nominal input voltage -24 VDC, which is primarily intended for controlling electromechanical components such as contactors and valves. As -24 VDC is a unique signal in the majority of electrical cabinets and the fact that the output is monitored by Pluto, short circuits with other potentials can be detected right away.

Pluto-bus

The Pluto-bus is a CAN-bus with its own safety protocol. The bus cable can be up to 600 m long at the minimum bus speed, and up to 150 m at 400 kb/s. The bus can be both extended and connected to other types of buses through gateways.

Pluto Manager and IDFIX

Pluto manager

The Pluto Manager is a freeware for fast, easy and safe programming of the PLC program for Pluto. The programming language used is ladder, which is supplemented with TÜV-approved function blocks for many common features. The software can also be used to configure Pluto's terminal blocks, e.g. to specify the IQ terminals that serve as inputs or outputs, and if the controller should expect a static or dynamic signal. Pluto Manager can be downloaded from www.abb.com/lowvoltage.

IDFIX

IDFIX is a identification circuit that is unique to each device on the Pluto bus. It includes an identification code and makes it possible to distribute a PLC program in the network. There are four different versions: R, RW, DATA and PROG. In addition to the identification code, DATA may also include safety codes from the AS-i nodes in an AS-i system. PROG includes the current PLC program and is used with single-Pluto for program distribution. IDFIX is connected between the input terminals ID and 0V.

Single Pluto controls and monitors safety for local systems - large aswell as small systems

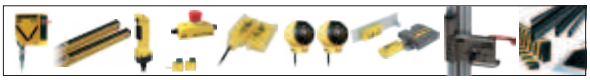

20/46 I/O

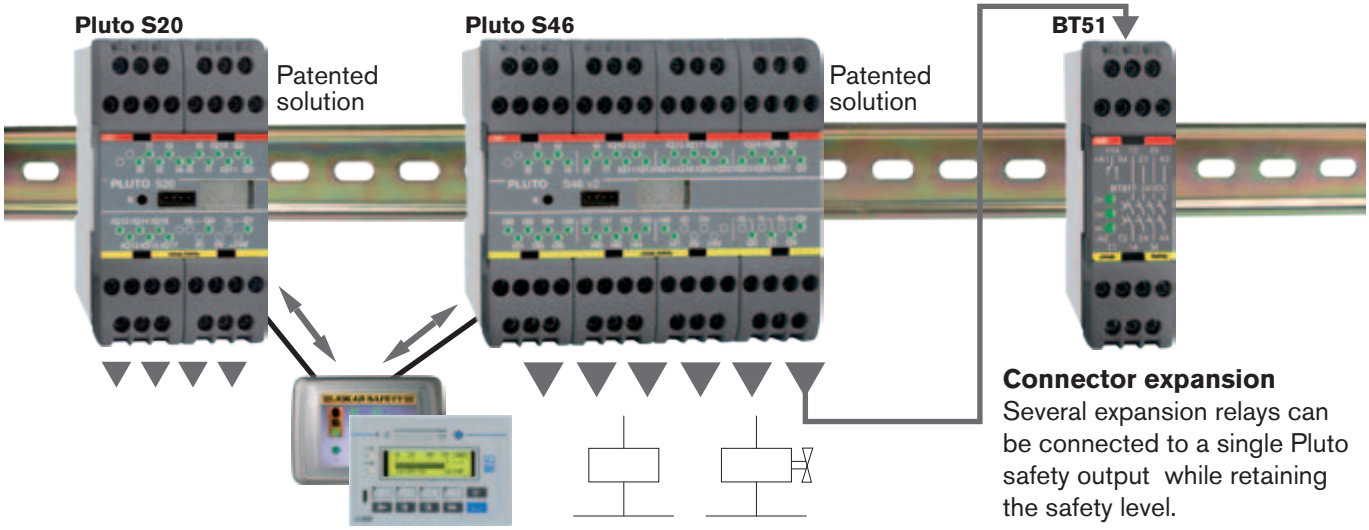

Connector expansion
Several expansion relays can be connected to a single Pluto safety output while retaining the safety level.

HMI
A HMI-terminal is easy to connect to one or more Plutos through the Modbus contact.

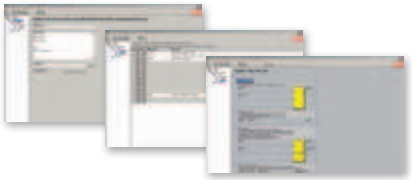

Pluto Manager
A free of charge software is available on our website.

The Pluto S20 and Pluto S46 versions are safety PLC's that are designed for safety and protection products installed locally on a machine. With a wide range of connectivity options, a lot of protection is integrated into a PLC which in turn controls, for example, one or more safe outputs in a qualified manner without risking a dangerous situation.

Using an expansion relay, such as BT50, the number of safe outputs in Pluto can be expanded. The connection will then be made as shown in the figure. If IDFIX PROG is used for single-Pluto, there is the option of copying a PLC program via the identification circuit over to Pluto without having to connect a computer.

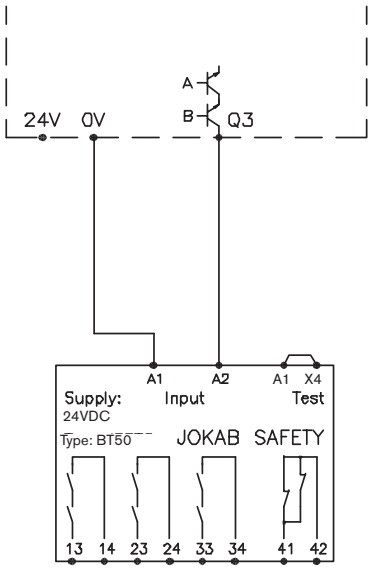

Connection example of a contact expansion with Pluto

Technical data - general	
Manufacturer:	ABB AB/Jokab Safety, Sweden
Colour:	Grey
Operating voltage:	24V DC ±15%
Installation:	35 mm DIN rail
Electrical insulation:	Category II in accordance with IEC 61010-1
Level of safety: EN 954-1 EN ISO 13849-1 EN 61508 EN 62061	 Kat. 4 PL e/kat. 4 SIL 3 SIL 3
PFH_D Relay output Transistor output	 $2{,}00\times10^{-9}$ $1{,}50\times10^{-9}$
Failsafe inputs I & IQ Type: Current at 24 V Max. overvoltage	 +24 V (for PNP sensors), IQ also configurable as non-failsafe outputs 5.1 mA 27 V continuous
Safe outputs Q Q2–Q3: Output voltage tolerance Q0, Q1, (Q4, 5):	 Transistor, –24VDC, 800 mA Supply voltage - 1,5 V at 800 mA Relay outputs AC-1: 250 V/1,5 A AC-15: 250 V/1,5 A DC-1: 50 V/1,5 A DC-13: 24 V/1,5 A
Non-failsafe outputs Q Type: Max. current/output:	 Transistor +24V, PNP "open collector" also configurable as failsafe inputs 800 mA

Temperature Ambient temperature: Storage and transport:	 –10˚C to +50˚C –25˚C to +55˚C
Response times Dyn. A or static input to relay output: Dyn. A or static input to transistor output: Dyn. B or Dyn. C input to relay output: Dyn. B or Dyn. C input to transistor output: Software setting "NoFilt".	 <20.5 ms + program exec. time <16.5 ms + program exec. time <23 ms + program exec. time <19 ms + program exec. time 5 ms shorter response time on I & IQ inputs
Additional Response times Databus between Pluto units Databus between Pluto units on error	 10 ms 10–40 ms
Enclosure classification Enclosure: Connection terminals:	 IP 40, IEC 60 529 IP 20, IEC 60 529

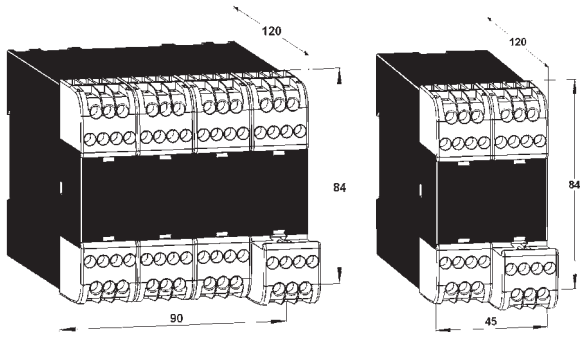

The terminal blocks are detachable without needing to disconnect the wiring. The units are assembled with a gap of at least 5 mm.

Technical data - type-specific	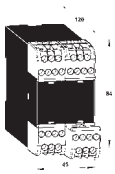	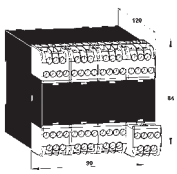
	Pluto S20 20 I/O *Non-Pluto safety bus*	**Pluto S46** 46 I/O *Non-Pluto safety bus*
Article number/ordering data:	2TLA020070R0500	2TLA020070R1800
Failsafe inputs	8 (I0..I7)	24 (I0..I7, I30..37, I40..I47)
Failsafe inputs or non-failsafe outputs	8 (IQ10..IQ17) Max total load 2.5 A	16 (IQ10..IQ17) (IQ20..IQ27) Max. total load 2A
Analogue inputs	1 (I5) 0..27V	3 (I5) 0..27 V
Failsafe relay outputs	2 (Q0..Q1)	4 (Q0..Q1 & Q4..Q5)
Failsafe transistor outputs	2 (Q2..Q3)	2 (Q2..Q3)
Current monitoring	–	–
Pluto safety bus	–	–
Own current consumption	100...300 mA	100...500 mA
Recommended external fuse:	6 A	10A
Dimensions (w x h x d)	45 x 84 x 118 mm	90 x 84 x 118 mm

I/O Overview - Pluto without a safety bus

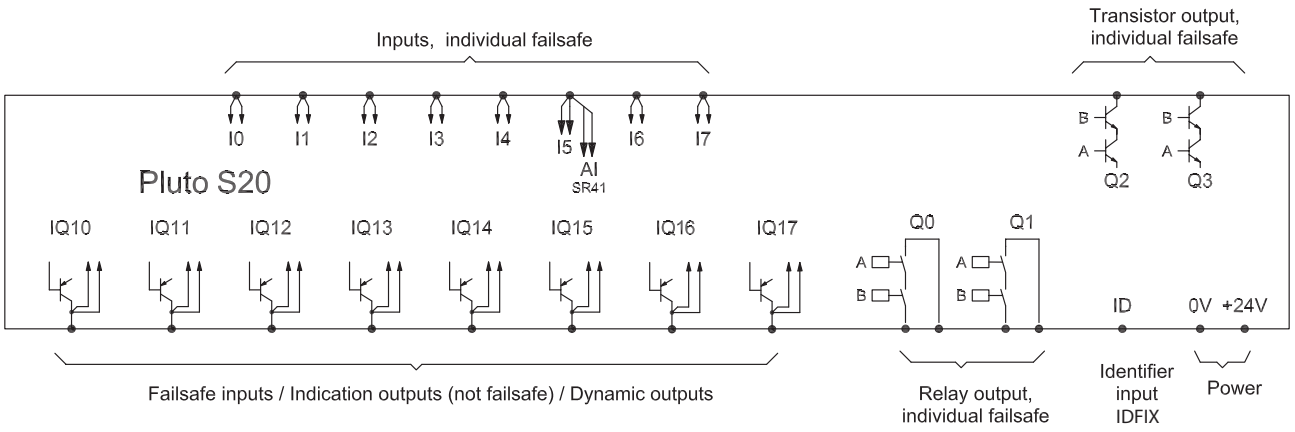

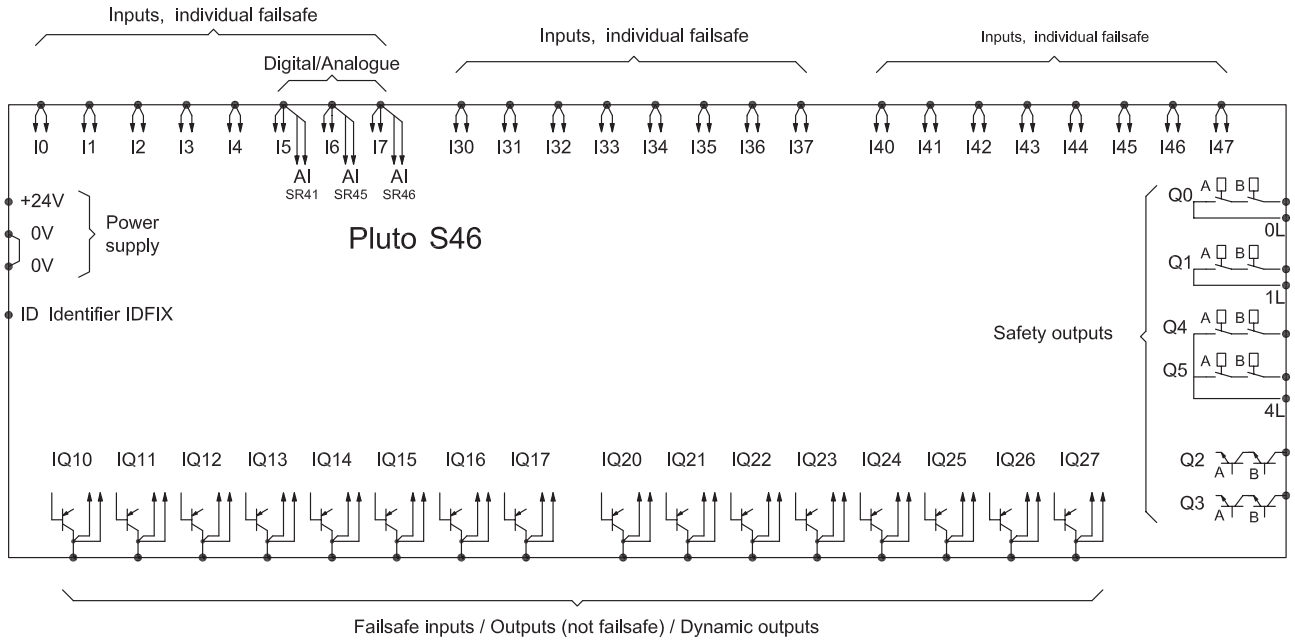

ID: Connection for identifier, which has a unique ID number that can be read by the system.

I.. Safety inputs (24 VDC) that are individually secure. This means that the highest level of safety can be achieved with only one input if ABB Jokab Safety dynamic safety components are used. Otherwise two inputs are required for each safety function.

IQ.. I/O that can be used for safety inputs or signal outputs, e.g. to indicate or control functions that are not safety-related. For IQ.. as safety inputs, refer to I..

Q0, Q1: Failsafe relay outputs that are individually failsafe and individually programmable.

Q2, Q3: Failsafe transistor outputs (-24 VDC) that are individually failsafe and individually programmable. Intended for electro-mechanical components such as contactors and valves.

Q4, Q5 Failsafe relay outputs with common potential that are individually failsafe and individually programmable.

Input connection

The system offers solutions for both single and two-channel safety devices. In order to monitor wiring short-circuits it is possible to use up to three different dynamic signals and static voltage (+24 V) to supply the inputs. The inputs are then programmed to only accept one of the signal types.

In a two-channel system both channels will be measured, using two different signals. The system will thereby be able to detect a short-circuit between the channels.

In a single channel system the dynamic signal is modified at each sensor. A short-circuit between the input and the output of the sensor will be detected at the Pluto input. PL e according to EN ISO 13849-1 can thus be achieved by using only one channel and one input.

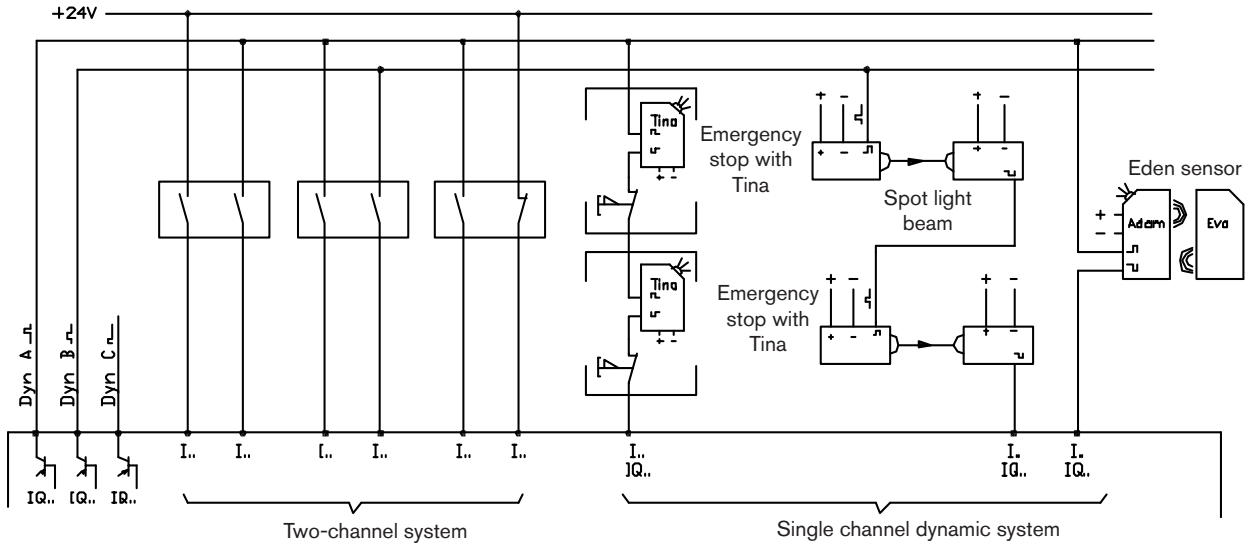

Input connection alternative in accordance with PL e EN ISO 13849-1.

Reset button that uses the combined input and output facility

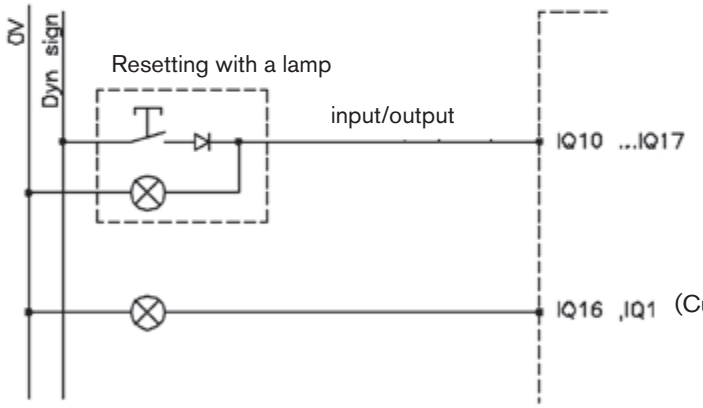

Both a lamp and a pushbutton can be connected to the same terminal. This function is for resetting safety devices and to reduce the number of I/Os used.

Pluto models with a safety bus controls and monitors safety for dispersed systems – large aswell as small systems.

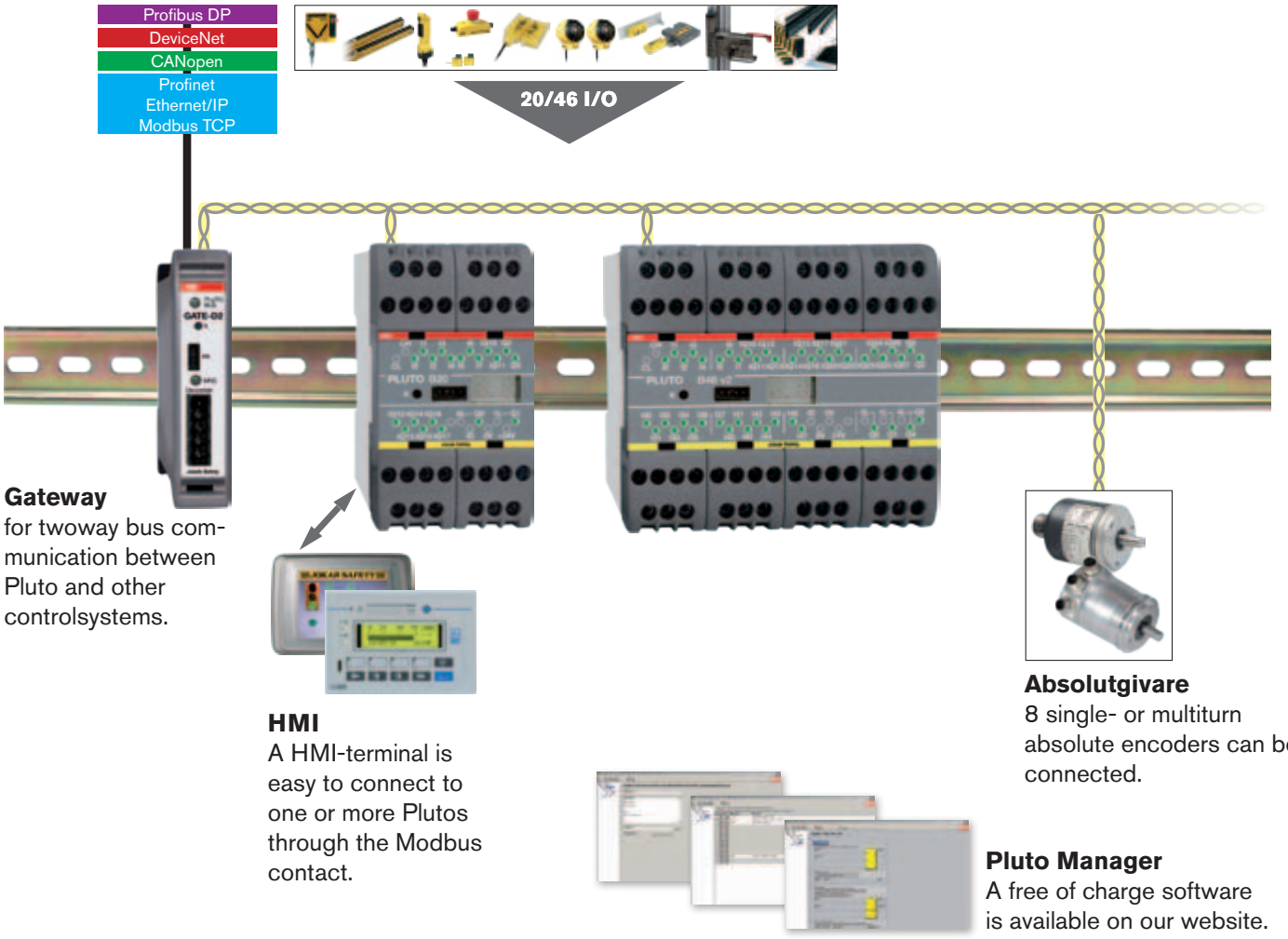

Gateway
for twoway bus communication between Pluto and other controlsystems.

HMI
A HMI-terminal is easy to connect to one or more Plutos through the Modbus contact.

Absolutgivare
8 single- or multiturn absolute encoders can be connected.

Pluto Manager
A free of charge software is available on our website.

Pluto versions with bus have the same properties as single-Pluto unlike bus communication. With the help of the Pluto-bus networks can be created with multiple Plutos in interaction. Gateways can be connected to the Pluto bus for communication with other systems. The gateway models GATE D2 and C2 can also be used as an extension of the bus cable to extend the Pluto network. The fact that Pluto is an All-master system means that each Pluto device controls its outputs locally, while it is just as easy to read the inputs of other Pluto-units as it is to read its own. It is also easy to both read and write to global memory locations available across the Pluto bus. The PLC program is created using the Pluto Manager freeware and is distributed to all Pluto units. You can also connect speed and position sensors via the Pluto bus.

Current monitoring (Pluto A20 only)
Pluto A20 can monitor the current through the IQ16 and IQ17 outputs. The function is designed for, but not limited to, ensuring that the muting lamps are working. The hardware for current monitoring is not designed with individual redundancy, which means that the function must be used dynamically if it is to be used in a safety function. This means that the current must be read and evaluated both when the output is enabled and disabled.

Technical data - general	
Manufacturer:	ABB AB/Jokab Safety, Sweden
Colour:	Grey
Operating voltage:	24V DC ±15%
Installation:	35 mm DIN rail
Electrical insulation:	Category II in accordance with IEC 61010-1
Safety level EN 954-1 EN ISO 13849-1 EN 61508 EN 62061	 Kat. 4 PL e/kat. 4 SIL 3 SIL 3
PFH_D Relay output Transistor output	 $2{,}00\times10^{-9}$ $1{,}50\times10^{-9}$
Failsafe inputs I & IQ Type: Current at 24 V Max. overvoltage	 +24 V (for PNP sensors), IQ also configurable as non-failsafe outputs 5.1 mA 27 V continuous
Safe outputs Q Q2–Q3: Output voltage tolerance Q0, Q1, (Q4, 5):	 Transistor, –24VDC, 800 mA Supply voltage - 1,5 V at 800 mA Relay outputs AC-1: 250 V/1,5 A AC-15: 250 V/1,5 A DC-1: 50 V/1,5 A DC-13: 24 V/1,5 A
Non-failsafe outputs Q Type: Max. current/output:	 Transistor +24V, PNP "open collector" also configurable as failsafe inputs 800 mA

Pluto safety bus Max number of Pluto units on the databus: Databus type: Databus speeds: Databus cable length:	 32 CAN 100, 125, 200, 250, 400, 500, 800, 1000 kb/s Up to 600 m, 150 m at 400 kb/s
Temperature Ambient temperature: Storage and transport:	 –10°C to +50°C –25°C to +55°C
Response times Dyn. A or static input to relay output: Dyn. A or static input to transistor output: Dyn. B or Dyn. C input to relay output: Dyn. B or Dyn. C input to transistor output: Software setting "NoFilt".	 <20.5 ms + program exec. time <16.5 ms + program exec. time <23 ms + program exec. time <19 ms + program exec. time 5 ms shorter response time on I & IQ inputs
Additional Response times Databus between Pluto units Databus between Pluto units on error	 10 ms 10–40 ms
Enclosure classification Enclosure: Connection terminals:	 IP 40, IEC 60 529 IP 20, IEC 60 529

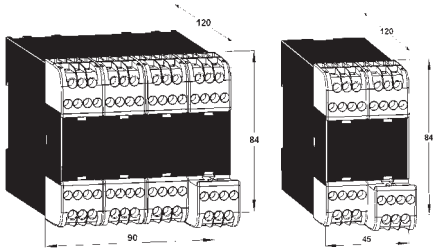

The terminal blocks are detachable without needing to disconnect the wiring. The units are assembled with a gap of at least 5 mm.

Technical data - type-specific	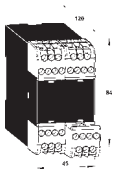	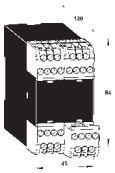	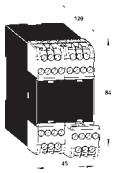	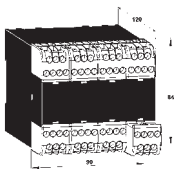
	Pluto A20 20 I/O *Current monitoring*	**Pluto B16** 16 I/O *Non-failsafe outputs*	**Pluto B20** 20 I/O	**Pluto B46** 46 I/O
Article number/ ordering data:	2TLA020070R0300	2TLA020070R0700	2TLA020070R0600	2TLA020070R1700
Failsafe inputs	8 (I0..I7)	8 (I0..I7)	8 (I0..I7)	24 (I0..I7, I30..37, I40..I47)
Failsafe inputs or non-failsafe outputs	8 (IQ10..IQ17) Max total load 2.5 A	8 (IQ10..IQ17) Max total load 2.5 A	8 (IQ10..IQ17) Max total load 2.5 A	16 (IQ10..IQ17) (IQ20..IQ27) Max. total load 2A
Analogue inputs	1 (I5) 0..27V	1 (I5) 0..27V	1 (I5) 0..27V	3 (I5) 0..27 V
Failsafe relay outputs	2 (Q0..Q1)	–	2 (Q0..Q1)	4 (Q0..Q1 & Q4..Q5)
Failsafe transistor outputs	2 (Q2..Q3)	–	2 (Q2..Q3)	2 (Q2..Q3)
Current monitoring	2(IQ16,IQ17)0-1.0A ±10%	–	–	–
Pluto safety bus	▪	▪	▪	▪
Own current consumption	100...300 mA	100...300 mA	100...300 mA	100...500 mA
Recommended external fuse:	6 A	6 A	6 A	10A
Dimensions (w x h x d)	45 x 84 x 118 mm	45 x 84 x 118 mm	45 x 84 x 118 mm	90 x 84 x 118 mm

I/O Overview - Pluto with a safety bus

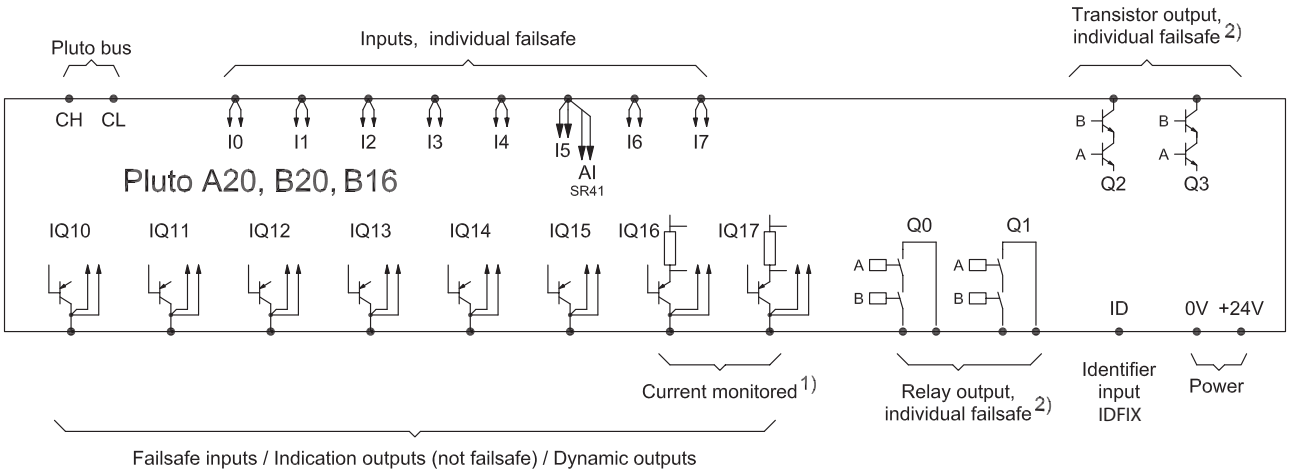

1) Current monitored only on A20
2) Not in B16

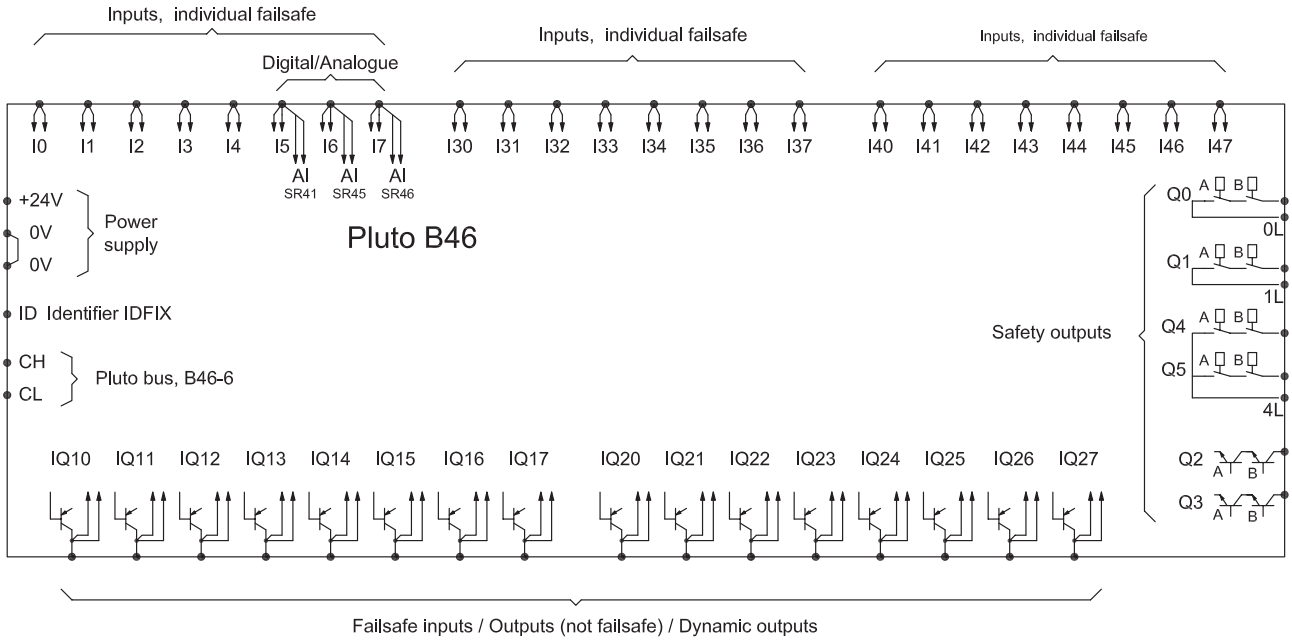

ID: Connection for identifier, which has a unique ID number that can be read by the system.

I.. Safety inputs (24 VDC) that are individually secure. This means that the highest level of safety can be achieved with only one input if ABB Jokab Safety dynamic safety components are used. Otherwise two inputs are required for each safety function.

IQ.. I/O that can be used for safety inputs or signal outputs, e.g. to indicate or control functions that are not safety-related. For IQ.. as safety inputs, refer to I..

Q0, Q1: Failsafe relay outputs that are individually failsafe and individually programmable.

Q2, Q3: Failsafe transistor outputs (-24 VDC) that are individually failsafe and individually programmable. Intended for electro-mechanical components such as contactors and valves.

Q4, Q5 Failsafe relay outputs with common potential that are individually failsafe and individually programmable.



TÜVRheinland®

ZERTIFIKAT
CERTIFICATE

EC Type-Examination Certificate

Reg.-No.: 01/205/5066/10

Product tested	Logic unit to ensure safety functions Safety PLC	Certificate holder	ABB AB Jokab Safety Boplatsgatan 3 213 76 Malmö Sweden
Type designation	Pluto For certified Hardware and Software Versions see current "Version Release List".	Manufacturer	see certificate holder
Codes and standards forming the basis of testing	EN ISO 13849-1:2008 + AC:2009 EN 62061:2005 IEC 61508 Parts 1-7:1998 / 2000 EN 60204-1:2006 + A1:2009 (in extracts)	EN 50178:1997 EN 61496-1:2008 + A1:2008 (in extracts) EN 574:1996 + A1:2008 (in extracts)	
Intended application	Safety related programmable electronic system for machinery and process industry applications. The Pluto PLC complies with the requirements of the relevant standards (Cat. 4 / PL e acc. to EN ISO 13849-1, SIL CL 3 acc. to EN 62061 / IEC 61508, Type IIIC of EN 574, Type 4 of EN 61496-1) and can be used in applications up to Cat. 4 / PL e acc. to EN ISO 13849-1 and SIL 3 acc. to EN 62061 / IEC 61508.		
Specific requirements	The current "Version Release List" as well as the conditions defined in the Programming Manual, Safety Manual and the Operating Instructions must be considered.		

It is confirmed, that the product under test complies with the requirements for machines defined in Annex I of the EC Directive 2006/42/EC.

This certificate is valid until 2015-11-19.

Functional Safety Type Approved FS

The test report-no.: 968/M 157.08/10 dated 2010-11-19 is an integral part of this certificate.

The holder of a valid licence certificate for the product tested is authorized to affix the test mark shown opposite to products, which are identical with the product tested.

Berlin, 2010-11-19

Certification Body for Machinery, NB 0035

Dipl.-Ing. Eberhard Frejno



TÜV NORD

EG-Baumusterprüfbescheinigung

EC type-examination certificate

Registrier-Nr.

44 205 11 390992 000

ABB AB
Jokab Safety
Varlabergsvägen 11
434 39 Kungsbacka
Sweden

URAX ...



CSA INTERNATIONAL

Certificate of Compliance

Certificate: 1288324 Master Contract: 185438

Project: 1933348 Date Issued: 2008/01/25

Issued to: Jokab Safety AB
Boplatsgatan 3
Malmö, 213 76
Sweden

The products listed below are eligible to bear the CSA Mark shown with adjacent indicators 'C' and 'US'

Issued by: Daniel Dugnay, T.P.

Authorized by: Helene Vaillancourt
Operations Manager

PRODUCTS

CLASS 2252 81 - PROCESS CONTROL EQUIPMENT - Certified to US Standards
CLASS 2252 33 - PROCESS CONTROL EQUIPMENT - Components
CLASS 2252 83 - PROCESS CONTROL EQUIPMENT - Certified to US Standards
CLASS 3211 07 - INDUSTRIAL CONTROL EQUIPMENT - Miscellaneous Apparatus

Component type* Programmable Logic Controller, permanently installed rail mounted, Models: PLUTO A20, PLUTO B20, PLUTO S20, PLUTO A16, PLUTO B16, PLUTO B46-6, PLUTO S46-6 and PLUTO AS-i, rated input: 24Vdc, 5A (max), rated outputs: 24Vdc, 800mA/2.5A max total load all outputs (IQ10-IQ17) (IQ20-27) and 250Vac, 1.5A (Q0-Q1)(Q4-Q5), -24Vdc, 800mA (Q2-Q3), IP40, IP20 terminals.

Robot cell with Pluto



Description:
The example describes a processing machine served by a robot. The machine safety system consists of one (Pluto 1) to which all protection has been connected. The robot has been equipped with a (Pluto 0) to which the cell protection has been connected. The Pluto for the machine has been connected via a databus cable to the robot's Pluto so that common functions, such as emergency stop, can be used by the whole cell.

Function:
Emergency stop takes priority and will stop both the machine and the robot. The machine hatch acts as the zone divider, when the hatch is closed the machine forms one zone and the robot another zone. When the machine hatch is open, both the machine and the robot belong to the same zone. If the door is opened when the machine hatch is open, the machine and the robot will both stop, but if the machine hatch is closed, only the robot will be stopped.
After the door has been opened, the system must be reset by means of the reset button on the outside of the door. Emergency stop is reset when the pressed-in button is pulled out. NOTE. The cell operating cycle must not however start immediately on resetting the emergency stop or the door.

Electrical connections

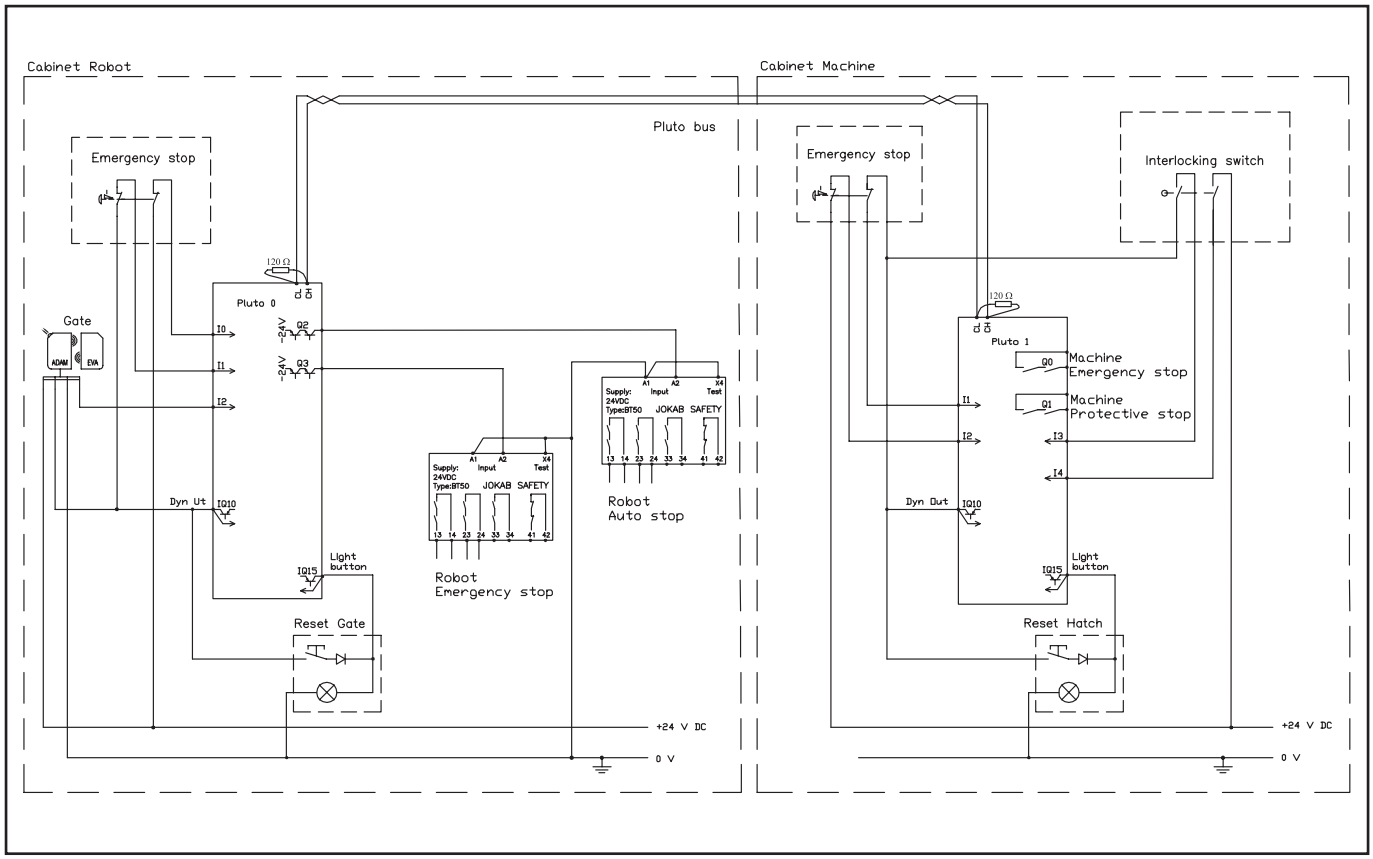

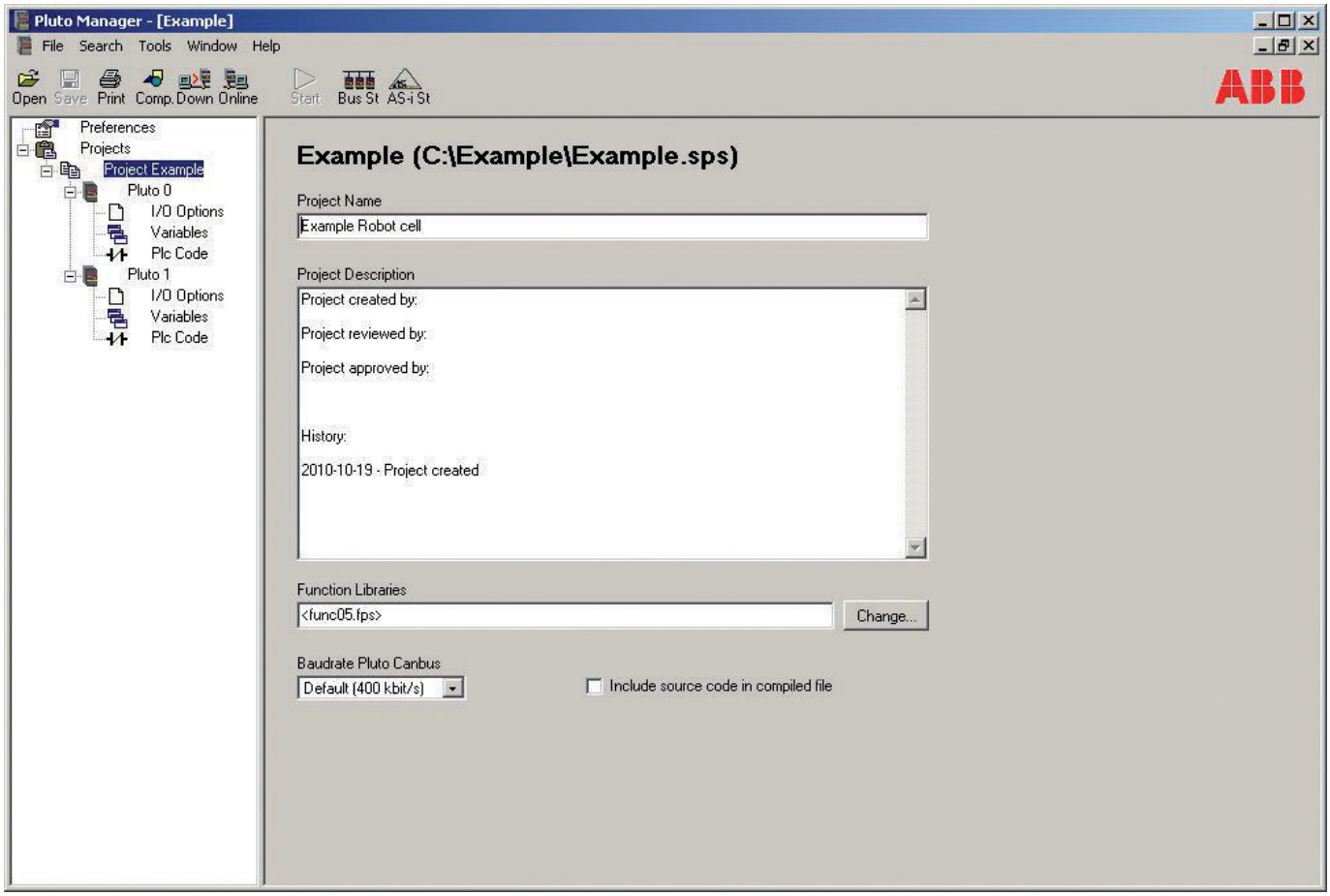

Pluto 0 settings – Robot cabinet



Pluto 0

I0.0=P0_ES1_Ch1	;Emergency stop 1 channel 1 - Static
I0.1=P0_ES1_Ch2	;Emergency stop 1 channel 2 - Dynamic A non-inverted
I0.2=P0_Eden1	;Door Eden sensor - Dynamic A
I0.15=P0_LB1_In	;Reset Door - Light button input - Dynamic A
Q0.2=P0_AS_OK	;Robot auto stop - Expansion BT50 relay
Q0.3=P0_ES	;Robot emergency stop - Expansion BT50 relay
GM0.0=P0_ES_OK	;Emergency stop OK in Pluto 0

Pluto 1 settings – Machine cabinet



Pluto 1

I1.1=P2_ES1_Ch1	;Emergency stop 1 channel 1 - Dynamic A non-inverted
I1.2=P2_ES1_Ch2	;Emergency stop 1 channel 2 -Static
I1.3=P2_IS1_Ch1	;Interlocking switch channel 1 - Dynamic A non-inverted
I1.4=P2_IS1_Ch2	;Interlocking switch channel 2 - Static
I1.15=P2_LB1_In	;Reset Hatch - Light button input - Dynamic A
Q1.0=P2_ES	;Machine Emergency stop
Q1.1=P2_PS	;Machine protective stop
GM1.0=P2_ES_OK	;Emergency stop OK in Pluto 1
GM1.1=P2_Hatch_OK	;Hatch closed

PLC code Pluto 0 – Robot cabinet

1

Start

2 Two channel monitoring with automatic reset of emergency stop at the door.

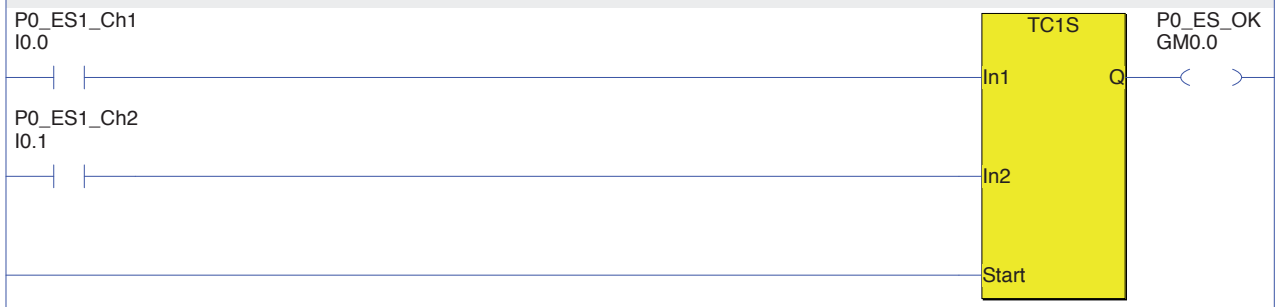

GM0.0=P0_ES_OK	*Emergency stop OK in Pluto 0*
I0.0=P0_ES1_Ch1	*Emergency stop 1 channel 1 - Static*
I0.1=P0_ES1_Ch2	*Emergency stop 1 channel 2 - Dynamic A non-inverted*

3 Emergency stop of robot.

When the emergency stop is actuated the robot will make an emergency stop.
In order to restore safety requires the emergency stop button needs to be reset.
An emergency stop from the machine panel will also emergency stop the robot.

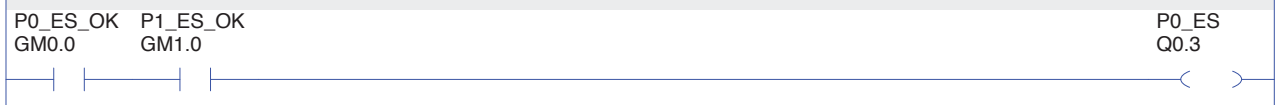

GM0.0=P0_ES_OK	*Emergency stop OK in Pluto 0*
GM1.0=P1_ES_OK	*Emergency stop OK in Pluto 1*
Q0.3=P0_ES	*Robot emergency stop - Expansion BT50 relay*

4 Auto stop of robot.

When the door to the robot cell is opened the robot is auto stopped.
To reset the safety the door needs to be closed and the reset button pressed and released.
Note that IQ15 of the Pluto is used both as a button in and to indicate diffirent reset states.
Constant light means reset is not possible, safety not ok.
Flash 0.4 s high, 0.6 s low means reset is possible but not performed.
No light means reset has been performed and the safety is ok.

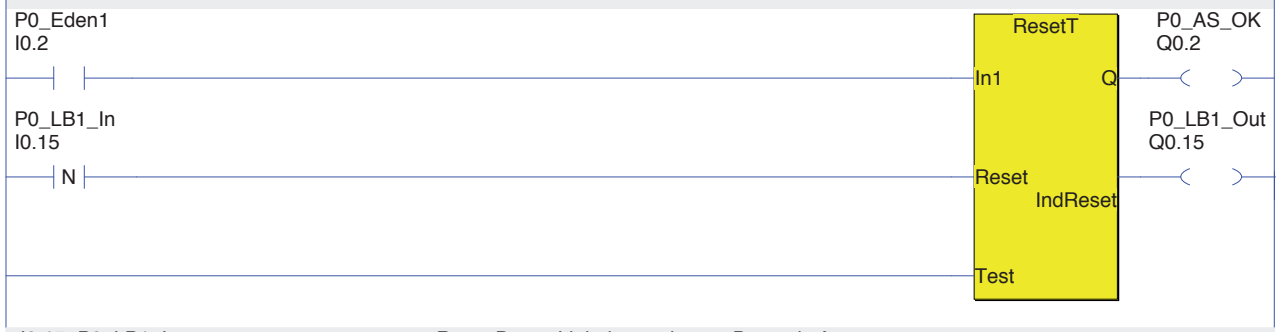

I0.15=P0_LB1_In	*Reset Door - Light button input - Dynamic A*
I0.2=P0_Eden1	*Door Eden sensor - Dynamic A*
Q0.15=P0_LB1_Out	*Reset Door - Light button output - Static*
Q0.2=P0_AS_OK	*Robot auto stop - Expansion BT50 relay*

5 Alarm 03 - Machine hatch open.

To generate User Errors (UE) a value of 200 - 299 can be written to the display of the Pluto.
A check of System Register 11 (SR11) in the Pluto prioritises errors from the Pluto itself over User Errors.

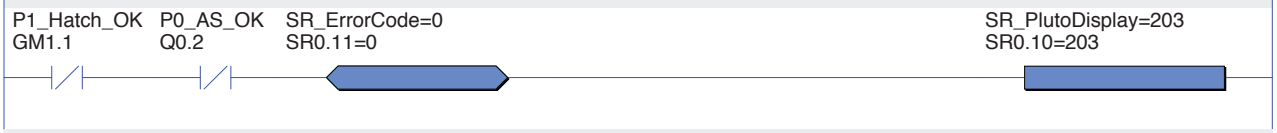

GM1.1=P1_Hatch_OK	*Hatch closed*
Q0.2=P0_AS_OK	*Robot auto stop - Expansion BT50 relay*
SR0.10=SR_PlutoDisplay	*Pluto display figure. For user error: 200+no*
SR0.11=SR_ErrorCode	*Error code*

6 Alarm 02 - Door open.

To generate User Errors (UE) a value of 200 - 299 can be written to the display of the Pluto.
A check of System Register 11 (SR11) in the Pluto prioritises errors from the Pluto itself over User Errors.

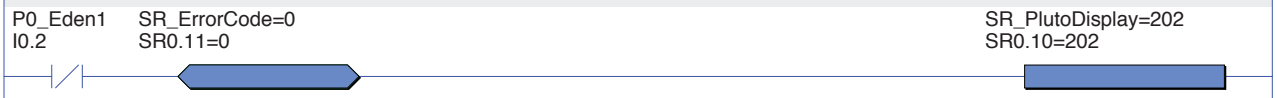

I0.2=P0_Eden1	*Door Eden sensor - Dynamic A*
SR0.10=SR_PlutoDisplay	*Pluto display figure. For user error: 200+no*
SR0.11=SR_ErrorCode	*Error code*

7 Alarm 01 - Emergency stop actuated.

To generate User Errors (UE) a value of 200 - 299 can be written to the display of the Pluto.
A check of System Register 11 (SR11) in the Pluto prioritises errors from the Pluto itself over User Errors.



GM0.0=P0_ES_OK	*Emergency stop OK in Pluto 0*
SR0.10=SR_PlutoDisplay	*Pluto display figure. For user error: 200+no*
SR0.11=SR_ErrorCode	*Error code*

PLC code Pluto 1 – Machine cabinet

1

Start

2 Two channel monitoring with automatic reset of emergency stop at the machine hatch.

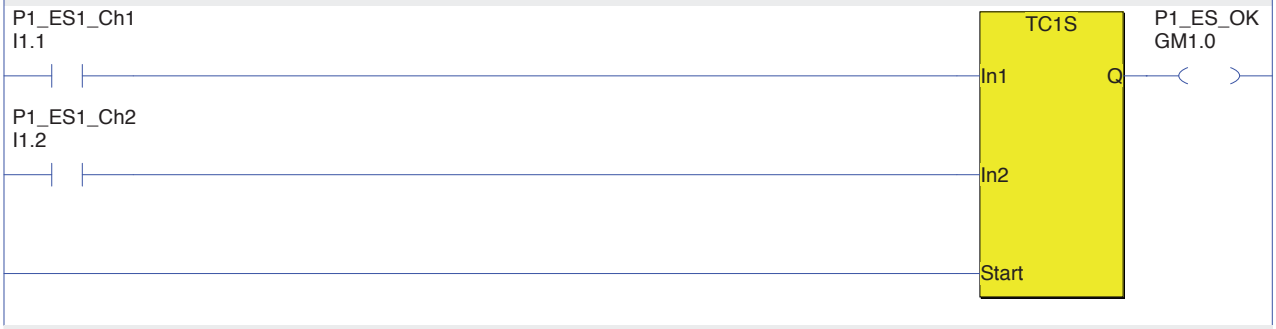

GM1.0=P1_ES_OK	*Emergency stop OK in Pluto 1*
I1.1=P1_ES1_Ch1	*Emergency stop 1 channel 1- Dynamic A non-inverted*
I1.2=P1_ES1_Ch2	*Emergency stop 1 channel 2 - Static*

3 Two channel monitoring with automatic reset of interlocking switch of the machine hatch.

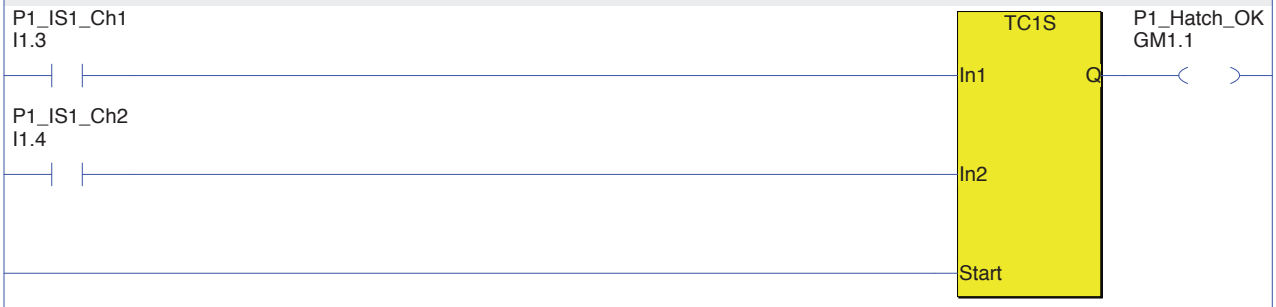

GM1.1=P1_Hatch_OK	*Hatch closed*
I1.3=P1_IS1_Ch1	*Interlocking switch channel 1 - Dynamic A non-inverted*
I1.4=P1_IS1_Ch2	*Interlocking switch channel 2 - Static*

4 Emergency stop of machine.

When the emergency stop is actuated the machine will make an emergency stop.
In order to restore safety requires the emergency stop button needs to be reset.
An emergency stop from the robot will also emergency stop the machine.

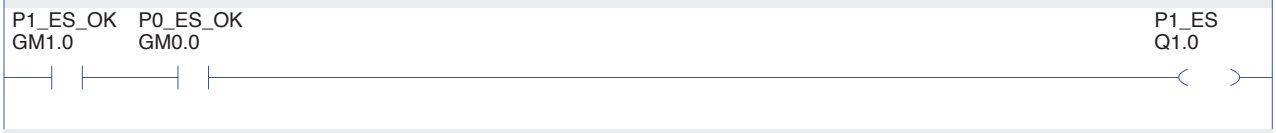

GM0.0=P0_ES_OK	*Emergency stop OK in Pluto 0*
GM1.0=P1_ES_OK	*Emergency stop OK in Pluto 1*
Q1.0=P1_ES	*Machine Emergency Stop*

5 Monitoring of the hatch.

When the hatch is opened the monitoring of the hatch is inactive.
To reset the safety the hatch needs to be closed and the reset button pressed and released.
Note that IQ15 of the Pluto is used both as a button in and to indicate different reset states.
Constant light means reset is not possible, safety not ok.
Flash 0.4 s high, 0.6 s low means reset is possible but not performed.
No light means reset has been performed and the safety is ok.

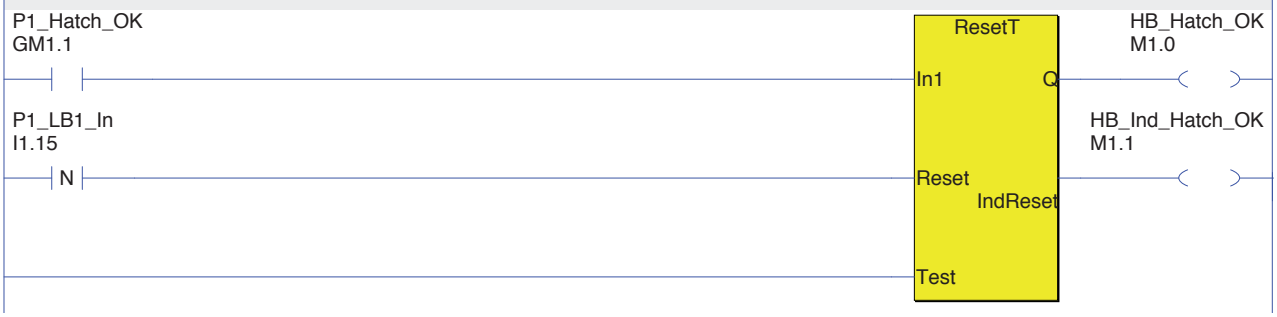

GM1.1=P1_Hatch_OK	*Hatch closed*
I1.15=P1_LB1_In	*Reset Hatch - Light button input - Dynamic A*
M1.0=HB_Hatch_OK	*Help Bit - Hatch closed*
M1.1=HB_Ind_Hatch_OK	*Help Bit - Indication Reset Hatch*

6 Light button indication of the reset of the hatch.

If the robot cell's door is closed and reset no light indication is needed inside the cell.



M1.1=HB_Ind_Hatch_OK	*Help Bit - Indication Reset Hatch*
Q0.2=P0_AS_OK	*Robot auto stop - Expansion BT50 relay*
Q1.15=P1_LB1_Out	*Reset Hatch - Light button output - Static*

7 Protective stop of the machine.

Either the hatch is closed and reset or the door to the robot cell is closed and reset.
This means the cell can work with the hatch both open or closed as long as the cell's door is closed and reset.

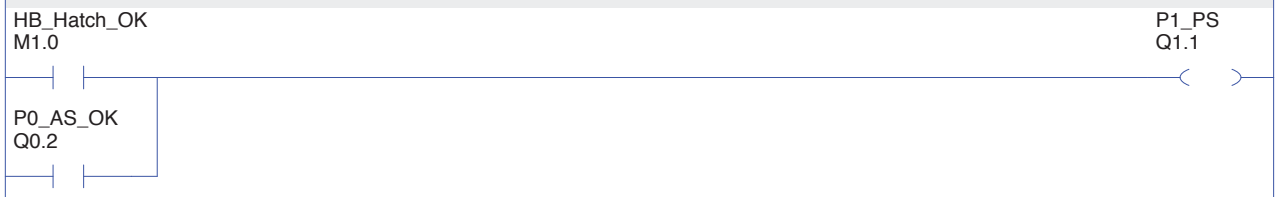

M1.0=HB_Hatch_OK	*Help Bit - Hatch closed*
Q0.2=P0_AS_OK	*Robot auto stop - Expansion BT50 relay*
Q1.1=P1_PS	*Machine Protective Stop*

8 Alarm 03 - Machine hatch open.

To generate User Errors (UE) a value of 200 - 299 can be written to the display of the Pluto.
A check of System Register 11 (SR11) in the Pluto prioritises errors from the Pluto itself over User Errors.

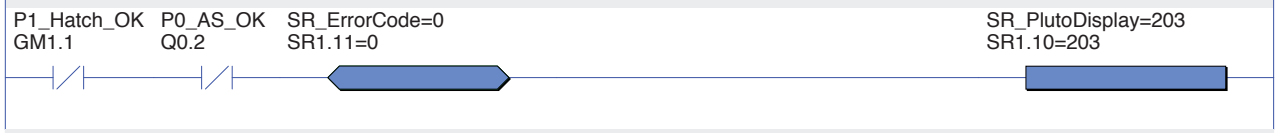

GM1.1=P1_Hatch_OK	*Hatch closed*
Q0.2=P0_AS_OK	*Robot auto stop - Expansion BT50 relay*
SR1.10=SR_PlutoDisplay	*Pluto display figure. For user error: 200+no*
SR1.11=SR_ErrorCode	*Error code*

9 Alarm 02 - Door open.

To generate User Errors (UE) a value of 200 - 299 can be written to the display of the Pluto.
A check of System Register 11 (SR11) in the Pluto prioritises errors from the Pluto itself over User Errors.

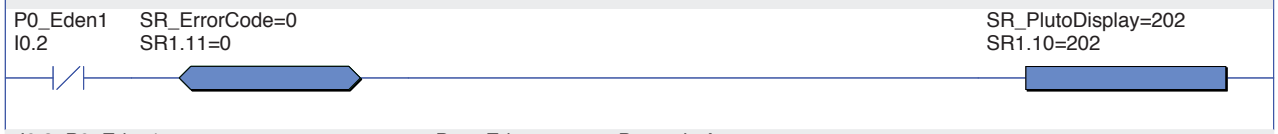

I0.2=P0_Eden1	*Door Eden sensor - Dynamic A*
SR1.10=SR_PlutoDisplay	*Pluto display figure. For user error: 200+no*
SR1.11=SR_ErrorCode	*Error code*

10 Alarm 01 - Emergency stop actuated.

To generate User Errors (UE) a value of 200 - 299 can be written to the display of the Pluto.
A check of System Register 11 (SR11) in the Pluto prioritises errors from the Pluto itself over User Errors.

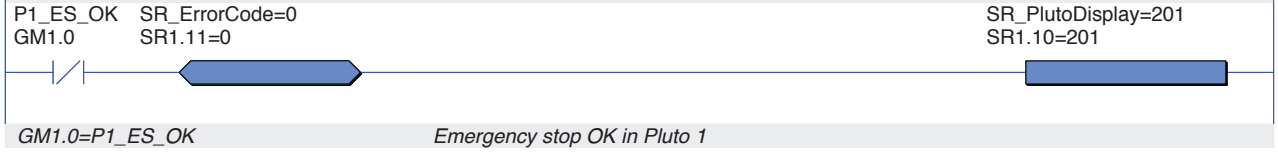

GM1.0=P1_ES_OK	*Emergency stop OK in Pluto 1*
SR1.10=SR_PlutoDisplay	*Pluto display figure. For user error: 200+no*
SR1.11=SR_ErrorCode	*Error code*

Pluto gateway

GATE-P2

Use:

Bi-directional status information from the Pluto safety PLC

For Profibus

Profibus DP

DeviceNet

CANopen

Profinet

Ethernet/IP

Modbus TCP



Features:

- Two-way communication
- Built-in filter function, shared network
- Only 22.5 mm wide
- Can be located anywhere in the databus
- Common interface with Pluto
- Ready-made function blocks

Pluto gateway is a unit providing two-way communication between a Pluto safety PLC and other field buses.

The Pluto gateway is a compact unit mounted on a DIN rail, and can be connected anywhere in a Pluto safety bus. The unit has a common interface with Pluto, i.e. the same cabling, and the Pluto Manager PC program can be used for servicing and where necessary programming. Normally, however, all the settings are made via a DIP switches, which means that programming tools are not required to put the gateway itself into operation.

For programming Pluto there are ready-made function blocks which, via a Pluto gateway, send and receive data from the supervisory system.

Data from Pluto

Via PROFIBUS a supervisory PLC system can have access to the I/O and other variables in a Pluto safety PLC. Global I/O in a Pluto safety PLC are accessible via PROFIBUS modules in the gateway, one module for each Pluto unit. Local data in Pluto units can be read by a "local data" module together with the PLC codes in the supervisory system.

Data to Pluto

Via PROFIBUS a supervisory PLC system can transmit non-safety-related information to a Pluto safety PLC. A total of 64 Boolean values and 8 different 16-bit registers can be transmitted. Function blocks for these functions are available in Pluto Manager.

PLC function blocks

To simplify the integration of a Pluto gateway PROFIBUS into the supervisory PLC system, ABB Jokab Safety provides ready-made function blocks for several popular brands of PLC. The function blocks make it easier to receive and send information to the Pluto system. The function blocks are supplied as open units with full access for the customer to change and add functions. These function blocks can be obtained via www.abb.com/lowvoltage.

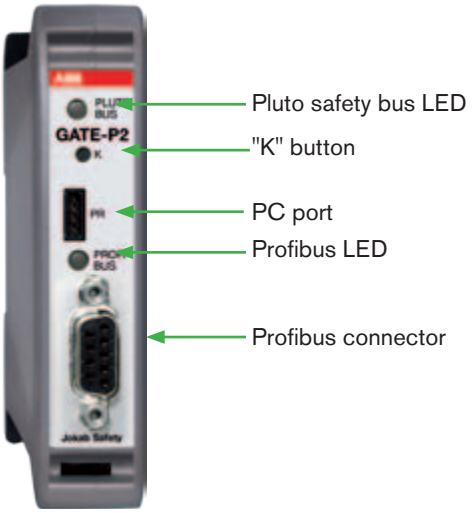

Technical data - GATE-P2	
Manufacturer:	ABB AB/Jokab Safety, Sweden
Article number/ordering data:	2TLA020071R8000 GATE-P2
Databuses:	-Pluto safety bus CAN (isolated) -PROFIBUS RS485 (isolated)
Pluto safety bus speeds:	100, 200, 250, 400, 500, 800 and 1000 kbit/s (automatic speed detection)
PROFIBUS speed:	Up to 12 Mbit/s (automatic speed detection)
PROFIBUS address:	Setting via DIP switches (0-99)
PROFIBUS version:	DP slave, DP-V0
Connections:	Top, 3-pole terminal for Pluto safety bus (included) Front, standard 9-pole PROFIBUS connection. Bottom, 2-pole terminal for 24 V DC (included)
Status indication:	Pluto safety bus status indication via LED PROFIBUS status indication via LED
Operating voltage:	24 V DC, -15% till +20%
Current at 24 V:	< 100 mA (recommended fuse ≤6 A)
Dimensions (w x h x d):	22.5 x 101 x 119 mm
Installation:	35 mm DIN rail
Operating temperature (ambient):	-10°C to + 55°C
Temperature, transport and storage:	-25°C to + 55°C
Humidity:	EN 60 204-1 50% at 40°C (ambient 90% at 20°C)
Enclosure classification:	Enclosure IP 20 - IEC 60 529 Terminals IP 20 - IEC 60 529

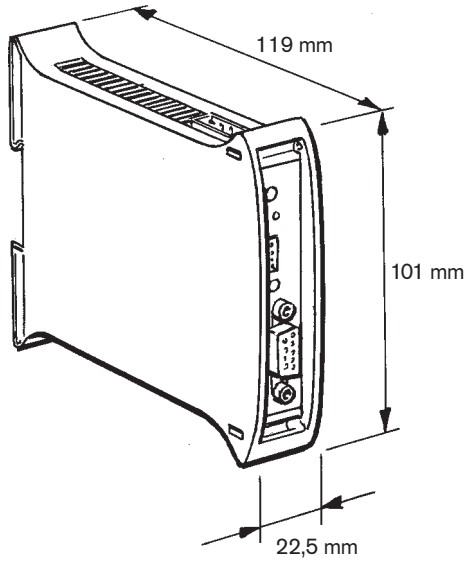

Gateway block schematic diagram - Pluto Profibus

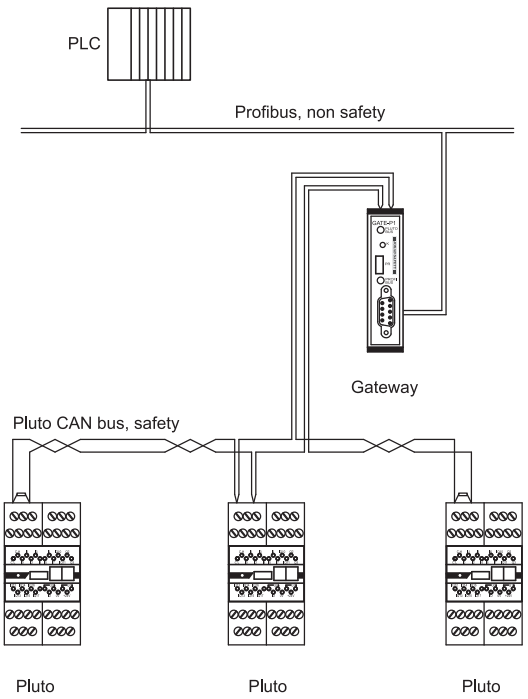

Pluto gateway
GATE-D2

Use:

Bi-directional status information from the Pluto safety PLC

For DeviceNet and Pluto bridge

Profibus DP
DeviceNet
CANopen
Profinet
Ethernet/IP
Modbus TCP



Features:

- Two-way communication
- Built-in filter function, shared network
- Only 22.5 mm wide
- Can be located anywhere in the databus
- Common interface with Pluto
- Ready-made function blocks

Pluto gateway is a unit providing two-way communication between a Pluto safety PLC and other field buses.

The Pluto gateway is a compact unit mounted on a DIN rail, and can be connected anywhere in a Pluto safety bus. The unit has a common interface with Pluto, i.e. the same cabling, and the Pluto Manager PC program can be used for servicing and where necessary programming. Normally, however, all the settings are made via a DIP switches, which means that programming tools are not required to put the gateway itself into operation.

For programming Pluto there are ready-made function blocks which, via a Pluto gateway, send and receive data from the supervisory system.

Data from Pluto

Via DeviceNet a supervisory PLC system can have access to the I/O and other variables in a Pluto safety PLC. Global I/Os in a Pluto safety PLC are accessible via DeviceNet "implicit" messages. Local data in Pluto units can be read via DeviceNet "explicit" messages.

Data to Pluto

Via DeviceNet a supervisory PLC system can transmit non-safety-related information to a Pluto safety PLC. A total of 64 Boolean values and 8 different 16-bit registers can be transmitted (via DeviceNet "implicit" or "explicit" messages). Function blocks for these commands are available in Pluto Manager.

Pluto bridge

A GATE-D2 can also be used to advantage as a CAN bridge when it is required to divide a Pluto safety bus into several sections. This is particularly useful when long databus cables are needed.

There is also a built-in filter function which makes it possible to block any data that is not required for use on the other side of the bridge, which reduces the databus loading in the other sections and thereby permits longer databus cables.

ABB Robotics IRC5

PLUTO GATE-D2 has support for integration into an ABB Robotics IRC5-system. The documentation that describes this integration can be obtained via the www.abb.com/low-voltage.



Technical data - GATE-D2	
Manufacturer	ABB AB/Jokab Safety, Sweden
Article number/ordering data:	2TLA020071R8200 GATE-D2
Databuses:	-Pluto safety bus CAN (isolated) -DeviceNet CAN (isolated)
Pluto safety bus speeds:	100, 200, 250, 400, 500, 800 and 1000 kbit/s (automatic speed detection)
DeviceNet speeds:	125, 250 and 500 kbit/s (set via DIP switch)
DeviceNet address:	Setting via DIP switches (1-63)
DeviceNet Version:	ODVA version 2.0
Connections:	Top, 3-pole terminal for Pluto safety bus (included) Front, 5-pole terminal for DeviceNet (included) Bottom, 2-pole terminal for 24 V DC (included)
Status indications:	Pluto safety bus status indication via LED DeviceNet MNS status indication via LED
Operating voltage:	24 V DC, -15% till +20%
Current at 24 V:	< 100 mA (recommended fuse ≤6 A)
Dimensions (w x h x d):	22.5 x 101 x 119 mm
Installation:	35 mm DIN rail
Operating temperature (ambient):	-10°C to + 55°C
Temperature, transport and storage:	-25°C to + 55°C
Humidity:	EN 60 204-1 50% at 40°C (ambient 90% at 20°C)
Enclosure classification:	Enclosure IP 20 - IEC 60 529 Terminals IP 20 - IEC 60 529

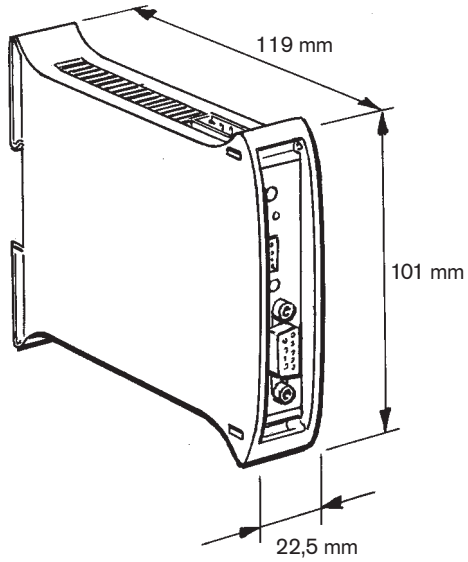

Gateway block schematic diagram - Pluto DeviceNet

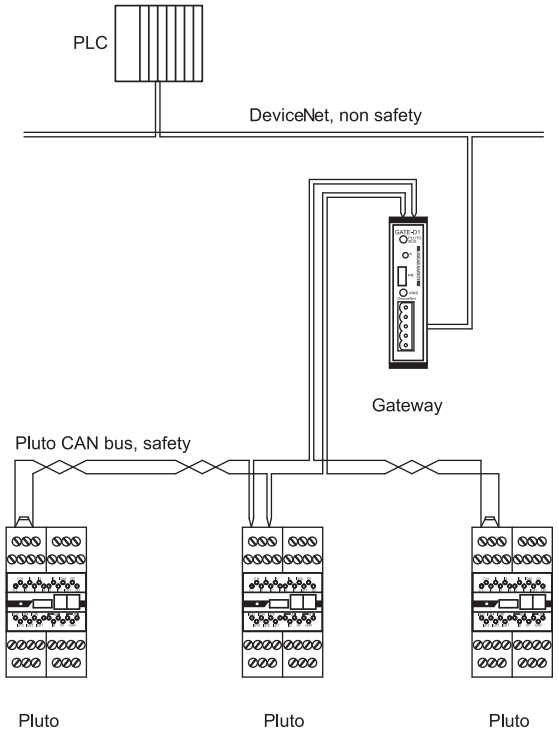

Pluto gateway

GATE-C2

Profibus DP
DeviceNet
CANopen
Profinet
Ethernet/IP
Modbus TCP



Use:

Bi-directional status information from the Pluto safety PLC

For CANopen and Pluto-bridge

Features:

- Two-way communication
- Built-in filter function, shared network
- Only 22.5 mm wide
- Can be located anywhere in the databus
- Common interface with Pluto
- Ready-made function blocks

Pluto gateway is a unit providing two-way communication between a Pluto safety PLC and other field buses.

The Pluto gateway is a compact unit mounted on a DIN rail, and can be connected anywhere in a Pluto safety bus. The unit has a common interface with Pluto, i.e. the same cabling, and the Pluto Manager PC program can be used for servicing and where necessary programming. Normally, however, all the settings are made via a DIP switches, which means that programming tools are not required to put the gateway itself into operation.

For programming Pluto there are ready-made function blocks which, via a Pluto gateway, send and receive data from the supervisory system.

Data from Pluto

Via CANopen a supervisory PLC system can have access to the I/O and other variables in a Pluto safety PLC. Global I/Os in a Pluto safety PLC are accessible via CANopen PDO messages. Local data in Pluto units can be read via CANopen SDO messages together with the PLC codes in the supervisory system.

Data to Pluto

Via CANopen a supervisory PLC system can send non-safety-related information to a Pluto safety PLC. A total of 64 Boolean values and 8 different 16-bit registers can be transmitted (CANopen PDO or SDO messages). Function blocks for these commands are available in Pluto Manager.

Pluto bridge

A GATE-C2 can also be used to advantage as a CAN bridge when it is required to divide a Pluto safety bus into several sections. This is particularly useful when long databus cables are needed.

There is also a built-in filter function which makes it possible to block any data that is not required for use on the other side of the bridge, which reduces the databus loading in the other sections and thereby permits longer databus cables.



Technical data - GATE-C2	
Manufacturer	ABB AB/Jokab Safety, Sweden
Article number/ordering data:	2TLA020071R8100 GATE-C2
Databuses:	-Pluto safety bus CAN (isolated) -CANopen CAN (isolated)
Pluto safety bus speeds:	100, 200, 250, 400, 500, 800 and 1000 kbit/s (automatic speed detection)
CANopen speeds:	125, 250 and 500 kbit/s (set via DIP switch) 10, 20, 50, 100, 125, 250, 500, 800 and 1000 kbit/s (via software)
CANopen address:	Setting via DIP switches or software (1-63)
CANopen version:	"Version 4.02 of the CiA Draft Standard 301"
Connections:	Top, 3-pole terminal for Pluto safety bus (included) Front, 5-pole terminal for CANopen (included) Bottom, 2-pole terminal for 24 V DC (included)
Status indications:	Pluto safety bus status indication via LED CANopen status indication via LED
Operating voltage:	24 V DC, -15% till +20%
Current at 24 V:	< 100 mA (recommended fuse ≤6 A)

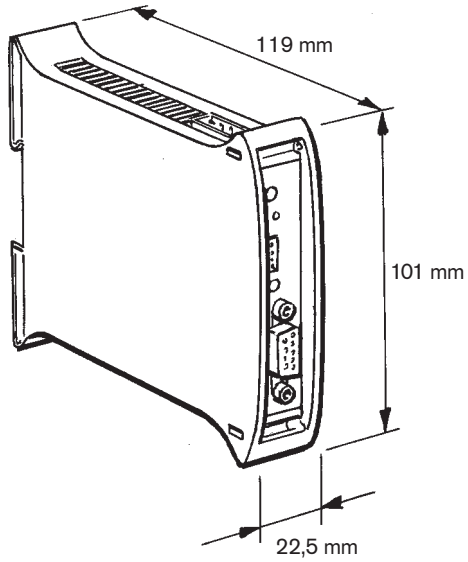

Dimensions (w x h x d):	22.5 x 101 x 119 mm
Installation:	35 mm DIN rail
Operating temperature (ambient):	-10°C to + 55°C
Temperature, transport and storage:	-25°C to + 55°C
Humidity:	EN 60 204-1 50% at 40°C (ambient 90% at 20°C)
Enclosure classification:	Enclosure IP 20 - IEC 60 529 Terminals IP 20 - IEC 60 529

Gateway block schematic diagram - Pluto CANopen

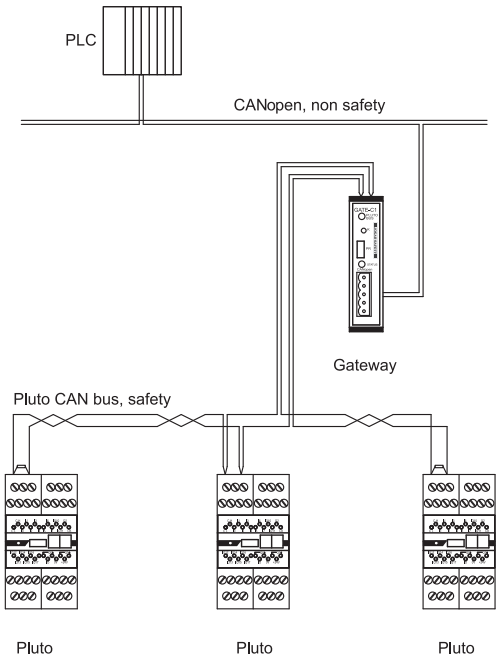

Pluto gateway
GATE-E2

Profibus DP
DeviceNet
CANopen
Profinet
Ethernet/IP
Modbus TCP



Use:

Bi-directional status information from the Pluto safety PLC

Profinet, Ethernet/IP, Modbus TCP

Features:

- Two-way communication
- Built-in filter function, shared network
- Can be located anywhere in the databus
- Common interface with Pluto
- Ready-made function blocks

Pluto gateway is a unit providing two-way communication between a Pluto safety PLC and other field buses.

The Pluto gateway is a compact unit mounted on a DIN rail, and can be connected anywhere in a Pluto safety bus. The unit has a common interface with Pluto, i.e. the same cabling, and the Pluto Manager PC program can be used for servicing and where necessary programming. Normally, however, all the settings are made via a DIP switches, which means that programming tools are not required to put the gateway itself into operation.

For programming Pluto there are ready-made function blocks which, via a Pluto gateway, send and receive data from the supervisory system.

Protocol

PLUTO Gateway GATE-E2 handles the status from and to Pluto safety PLCs via Ethernet protocols EtherNet/IP, PROFINET, Modbus TCP and a simple binary protocol that uses TCP/IP.

For IP-address configuration, etc. there is a simple web server and a terminal server.

Data from Pluto

Via one of the Ethernet protocols a supervisory PLC system can have access to the I/O and other variables in a Pluto safety PLC. Global I/Os in a Pluto safety PLC are accessible via the usual I/O transfer in the respective protocol. Local data in Pluto units can be read by special commands together with the PLC codes in the supervisory system.

Data to Pluto

Via the Ethernet protocol a supervisory PLC system can transmit non-safety-related information to a Pluto safety PLC. A total of 64 Boolean values and 8 different 16-bit registers can be transmitted. Function blocks for these functions are available in Pluto Manager.

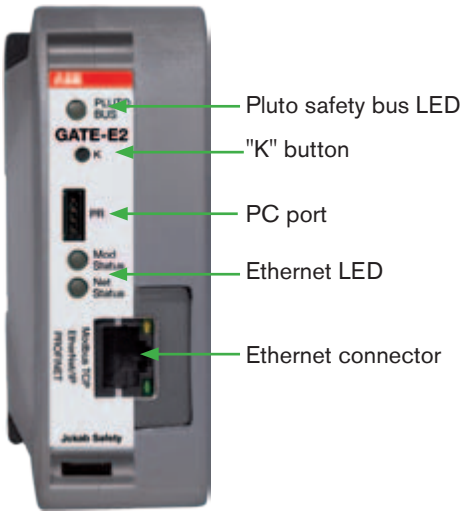

Technical data - GATE-E2	
Manufacturer	ABB AB/Jokab Safety, Sweden
Article number/ ordering data:	2TLA020071R8300 GATE-E2
Buses:	Pluto-bus CAN (isolated) Profinet (isolated) Ethernet/IP (isolated) Modbus TCP (isolated)
Pluto safety bus speeds	100, 200, 250, 400, 500, 800 and 1000 kbit/s (automatic speed detection)
Ethernet	10/100 Mbit/s Half and full duplex
Ethernet protocol	Status from and to Pluto safety PLC - EtherNet/IP - PROFINET - Modbus TCP - Binary server (TCP/IP) Note that certain combinations of server protocols cannot be used simultaneously. Gateway status and IP address configuration - Web server - Terminal server (TCP/IP)
EtherNet/IP	According to ODVA “CIP Edition 3.2” and “EtherNet/IP Adaption of CIP Edition 1.3”. Minimum RPI of 50 ms
PROFINET	PROFINET
Modbus TCP	According to the Modbus organisation, version 1.0b (approx. 20 messages per second).
Binary server (TCP/IP)	Simple TCP/IP protocol to send status from/to the Pluto system.

Web server	For simple sharing of IP addresses.
Terminal server (TCP/IP)	Simple server with the same commands as via the serial programming port in the unit.
IP address	Static sharing via web server or via programming port.
Gateway configuration	Takes place via EtherNet/IP, PROFINET, Modbus TCP or via the binary TCP/IP server.
Connections	Top, 3-pole terminal for Pluto safety bus (included) Front, Ethernet connection via RJ-45 (screened cable cat. 5e FTP) Bottom, 2-pole terminal for 24 V DC (included)
Status indications	Pluto safety bus status indication via LED (Pluto safety bus) Ethernet module status indication via LED (Mod Status) Ethernet network status indication via LED (Net Status)
Operating voltage	24 V DC, -15 % till +20 %
Current at 24 V	< 150 mA (recommended fuse ≤6 A)
Dimensions (w x h x d):	35 x 101 x 120 mm
Installation	35 mm DIN rail
Operating temperature (ambient)	-10°C to + 55°C
Temperature, transport and storage	-25°C to + 55°C
Humidity	EN 60 204-1 50 % at 40°C (ambient 90 % at 20°C)
Enclosure classification	Enclosure IP 20 - IEC 60 529 Terminals IP 20 - IEC 60 529

Gateway block schematic diagram - Pluto Ethernet

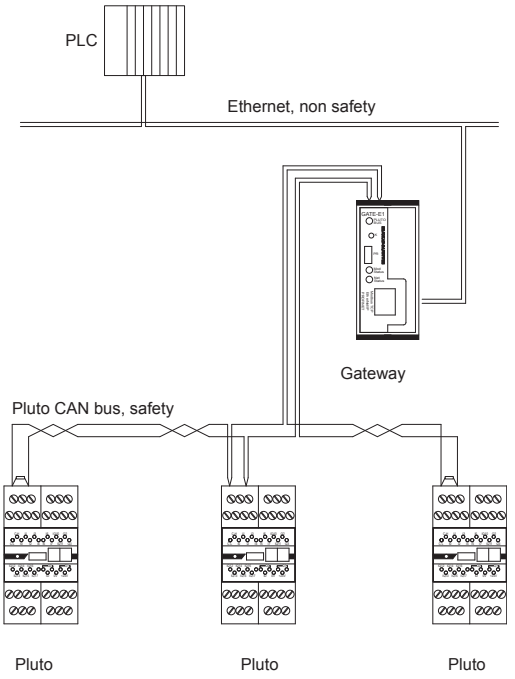

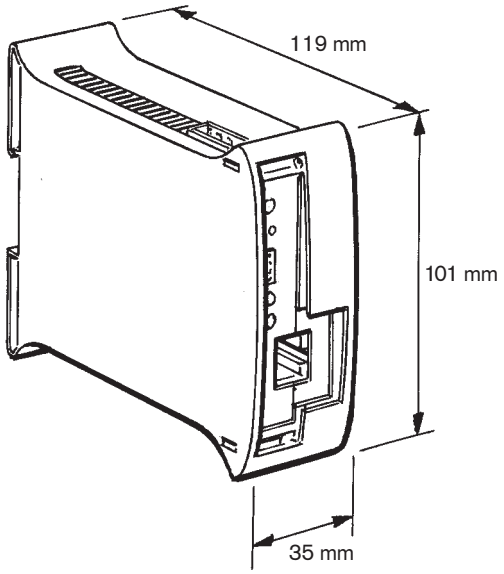

Pluto

Safe Encoder

Use:

Safe position and speed determination of machine movements.

Features:

- High resolution
- Selectable resolution
- Connected directly to the Pluto safety bus
- Ready-made function blocks



Rotational absolute value sensor for safe positioning

Together with a Pluto safety PLC, this rotational absolute encoder can be used for safe position determination. This is particularly useful in the case of such equipment as gantry robots, industrial robots, etc. Also in eccentric shaft presses, existing cam mechanisms can be replaced by absolute value position sensors for safe positioning. The sensors are available in single and multi-turn versions.

Up to 16 absolute encoders can be connected to a Pluto CAN databus. A Pluto on the databus reads the sensor values, which are evaluated. With a special function block in the PLC code, it is possible to design two-channel solutions with the sensors. The user can obtain safe values for position and speed from these values. This enables supervision of stationary and overspeed conditions.

The absolute value sensors are standard sensors with modified software to meet the safety requirements.

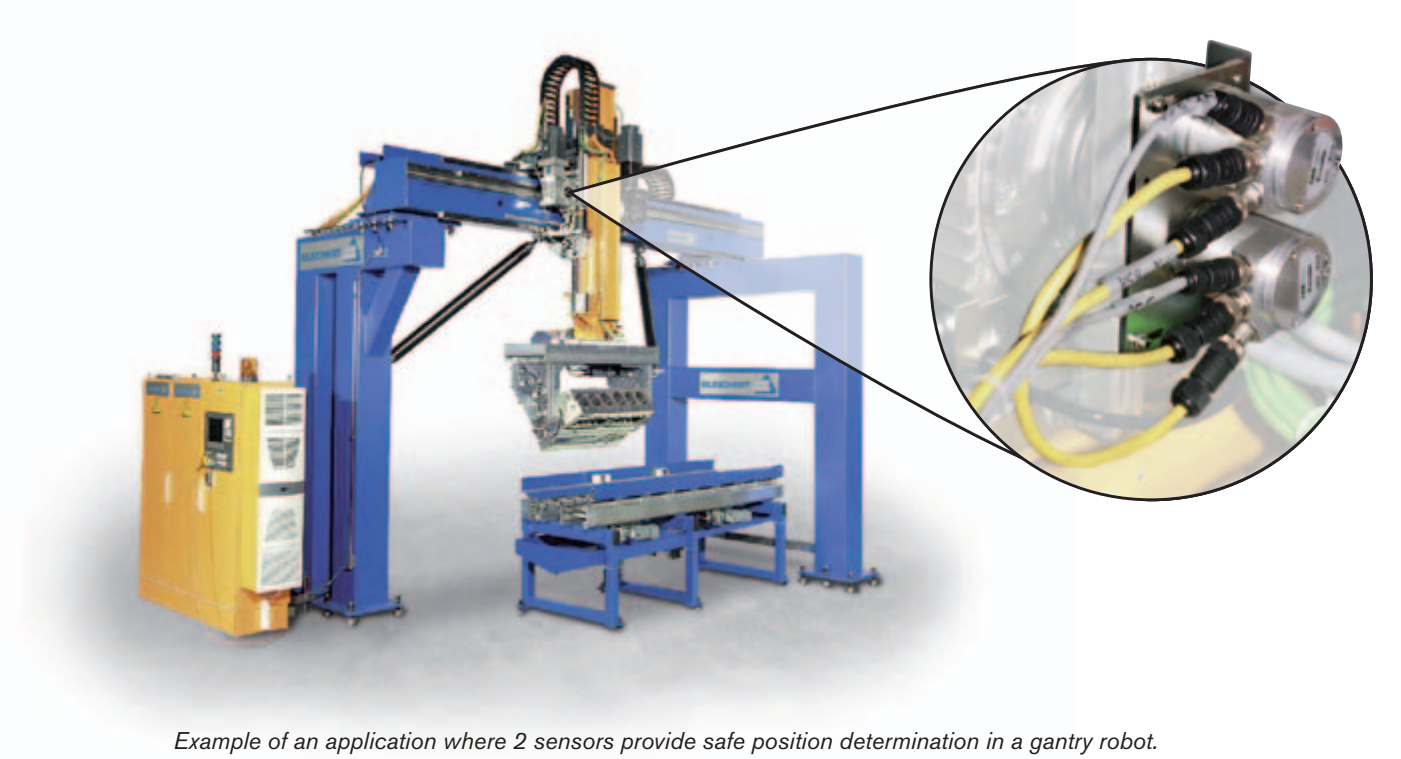

Example of an application where 2 sensors provide safe position determination in a gantry robot.

Technical data – Safe Encoder RSA 597	
Manufacturer	ABB AB/Jokab Safety, Sweden
Article number/ordering data:	2TLA020070R3600 RSA 597
Ambient temperature	-40°C .. +70°C
Temperature, transport and storage	-30°C .. +70°C
Ingress protection class	IP-67 in accordance with IEC 60529
At shaft inlet	IP-66 in accordance with IEC 60529
Vibration (55 to 2000 Hz)	< 300 m/s² in accordance with IEC 60068-2-6
Shock (6ms)	< 2,000 m/s² in accordance with IEC 60068-2-27
Material, enclosure	Aluminium
Surface treatment	Painted and chromed or anodised
Weight	Approx. 300 g
Accuracy and resolution	
Resolution	13 bits, 8192 positions per rotation
Accuracy	± ½ LSB (Least Significant Bit)
Operating voltage	9-36 V dc
Polarity-protected	Yes
Short-circuit protected	Yes
Databus speed	5 kbit/s - 1 Mbit/s, preset at 500kbit/s
Address input	Active low
Code type	Binary
Programmable functions	Resolution, 0 position Direction, Databus speed
Current consumption	50 mA at 24V dc
Max current consumption	100 mA



Safe Encoder RSA 597 – single turn

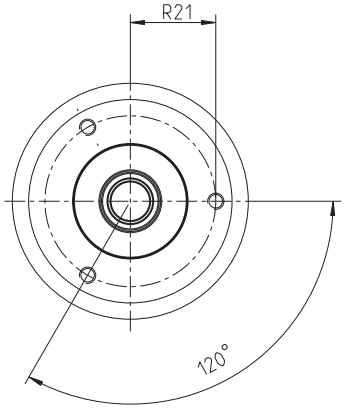

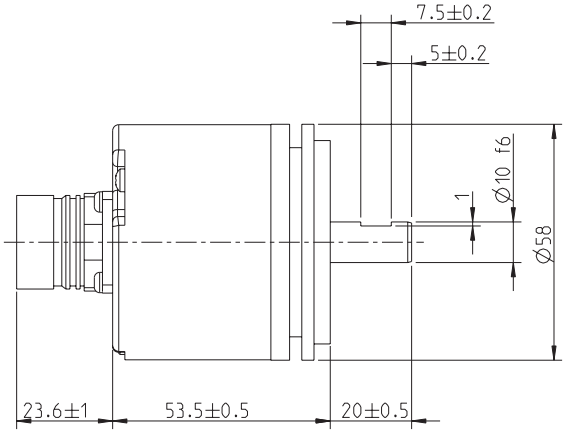

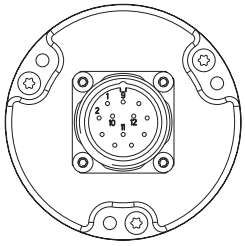

Technical data – Safe Encoder RSA 698	
Manufacturer	ABB AB/Jokab Safety, Sweden
Article number/ordering data:	2TLA020070R3700 RSA 698
Ambient temperature	-40°C .. +70°C
Temperature, transport and storage	-30°C .. +70°C
Ingress protection class	IP-67 in accordance with IEC 60529
At shaft inlet	IP-66 in accordance with IEC 60529
Vibration (55 to 2000 Hz)	< 100 m/s² in accordance with IEC 60068-2-6
Shock (6ms)	< 2,000 m/s² in accordance with IEC 60068-2-27
Material, enclosure	Aluminium
Surface treatment	Anodised
Weight	Approx. 400g
Accuracy and resolution	
Resolution, total	25 bit 13 bits, 8192 positions per rotation 12 bits, 4096 rotations
Accuracy	± 1 LSB (Least Significant Bit)
Operating voltage	9-36 V dc
Polarity-protected	Yes
Short-circuit protected	Yes
Databus speed	10 kbit/s - 1 Mbit/s
Code type	Binary
Programmable functions	Resolution, 0 position
Current consumption	50 mA at 24V dc
Max current consumption	100 mA



Safe Encoder RSA 698 – multi turn

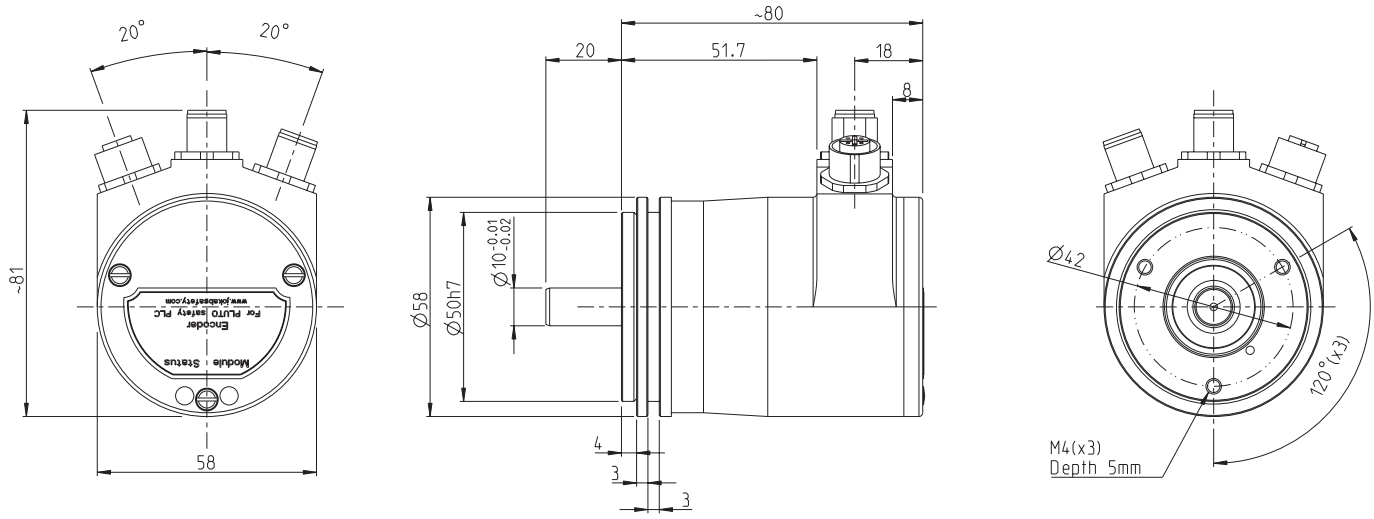

Safe Encoder

Function block for a single-turn encoder that generates safe position and speed values from two absolute encoders.

Function
The block reads and evaluates one absolute encoders. The position value is sent to the 'Position' output. The 'Speed' output is the average value for the speed, at the rate of pulses/10 ms. If an error occurs, the 'OK' output is set to zero. In certain applications the values of 'Position' and 'Speed' are used in conjunction with the 'OK' output.

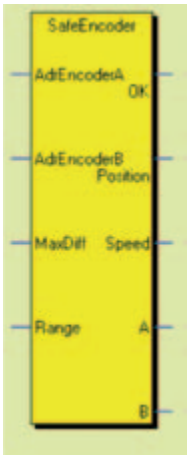

Descriptions of inputs and outputs

- AdrEncoderA: Encoder A node address
- AdrEncoderB: Encoder B node address
- MaxDiff: Max allowed deviation between the encoders (max 2% of Range)
- Range: Number of increments per revolution
- OK: Set when encoders are working OK and the position values are within the margin set by 'MaxDiff'
- Position: Position value
- Speed: Speed value as increments/10ms
- A: Encoder A position. Must not be used in PLC program!
- B: Encoder B position. Must not be used in PLC program!

NOTE! Position values from single encoders are only available for adjustment purposes and must NOT be used for safety.

NOTE! When error occurs 'Position' = -1, 'Speed' = -32768 and the OK output will be reset.

Safe Encoder Multiturn

Function block for a multi-turn encoder that generates safe position and speed values from two absolute encoders. Operative system 2.4.4 or higher is required.

Function
The block reads and evaluates two absolute encoders. The average value for the two sensors is calculated and sent to the 'Position' output. The 'Speed' output is the average value for the speed, at the rate of pulses/10 ms. The block monitors that the encoder position values do not differ by more than the input value set by 'MaxDiff'. If an error occurs, the 'OK' output is set to zero. In certain applications the values of 'Position' and 'Speed' are used in conjunction with the 'OK' output.



Descriptions of inputs and outputs

- AdrEncoderA: Encoder A node address
- AdrEncoderB: Encoder B node address
- MaxDiff: Max allowed deviation between the encoders (max 2% of IncrPerRev)
- IncrPerRev: Number of increments per revolution
- OK: Set when encoders are working OK and the position values are within the margin set by 'MaxDiff'
- Position: Position value
- Speed: Speed value as increments/10ms
- A: Encoder A position. Must not be used in PLC program!
- B: Encoder B position. Must not be used in PLC program!

NOTE! Position values from single encoders are only available for adjustment purposes and must NOT be used for safety.

NOTE! When error occurs 'Position' = -1, 'Speed' = -32768 and the OK output will be reset.

Encoder Cam

Function block for electronic cam gear.

Function
Output Q is activated if the value of the input register 'PosReg' is within the limits for 'MinPos' and 'MaxPos'.
NOTE! It is possible to specify a value that defines the sensor's zero position. Position <0 is not permitted.
Example: If MinPos = 3000 and MaxPos = 200, Q is activated when the position is greater than 2999 or less than 201.

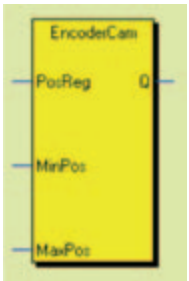

Descriptions of inputs and outputs

- PosReg: Input for the position value
- MinPos: Minimum limit value
- MaxPos: Maximum limit value