AIM & THURLBY THANDAR INSTRUMENTS

1908

5½ Digit Dual Measurement Multimeter

INSTRUCTION MANUAL

Aim-TTi

CONTENTS

1 Product Description 4

2 Safety 5

Symbols 6

3 Installation 7

3.1 Mains Operating Voltage 7

3.2 Mains Lead 8

3.3 Mounting 8

3.4 Handle/stand 8

4 Getting Started 9

4.1 Using this Manual 9

4.2 Installation and Safety 9

4.3 AC Power and Battery Operation 9

4.4 Switching On and Off 9

4.4.1 On/Off operation with AC Power 9

4.4.2 On/Off operation without AC Power 10

4.4.3 Power-up Settings 10

5 Measurement Connections 10

5.1 Input Sockets 10

5.1.1 Multimeter Test Leads 11

5.2 Rear Panel Connections 11

5.2.1 Trigger In/Out 11

5.2.2 Digital Interfaces 11

5.2.3 AC Inlet 11

5.2.4 Protective Earth Terminal 11

6 Making Basic Measurements 12

6.1 Scale Length 12

6.2 Measurement Parameter Selection 12

6.3 Measurement Range Selection 12

6.4 Making Voltage Measurements 13

6.5 Making Current Measurements 13

6.6 Making Resistance Measurements 13

6.6.1 Two Wire Measurements 13

6.6.2 Four Wire Measurements 14

6.7 Making Continuity and Diode Checks 14

6.7.1 Continuity Measurement 14

6.7.2 Diode Checks 14

6.8 Making Frequency Measurements 14

6.9 Making Capacitance Measurements 15

6.10 Over Voltage Protection 15

6.11 Measurement Hold 15

6.12 Measurement Null 15

6.13 The Cancel Key 15

7 Additional Parameters and Functions 16

7.1 Combined AC + DC Measurements 16

7.2 Decibel Measurement (dB) 16

7.3 Removing Test Lead Resistance (Ω Null) 16

7.4 Temperature Measurement (°C/°F) 17
7.5 Touch and Hold (T Hold) 17
7.6 Measurement Speed and Measurement Filter....17
7.7 Zero Re-Calibration 17
8 Dual Measurement Mode 18
8.1 Dual Measurement Combinations 18
8.2 Making Voltage and Current Dual Measurements 19
8.3 Measurement Update Times 19
9 Triggered Operation....20
9.1 Trigger In Signal 20
9.2 Trigger Out Signal (Measurement Complete)....20
10 Advanced and Programmable Functions 21
10.1 Selecting or Cancelling a Function 21
10.2 Limits....21
10.3 Ax + b 21
10.4 Min-Max 22
10.5 Delta %....22
10.6 Watts....23
10.7 VA 23
11 Data Logging....23
11.1 Setting-up the Logger....23
11.2 Running the Logger....24
11.3 Starting and Stopping the Logger....24
11.4 Recalling Logger Readings 24
11.5 Clearing Logger Readings....24
12 The Utilities Menu 25
12.1 Beep Sound {BEEp}....25
12.2 Measurement Speed {SPEEd}....25
12.3 Measurement Filter {FiLt}....25
12.4 External Trigger {E-tr}....25
12.5 Battery Condition {bAtt}....25
12.6 dB Reference Impedance {db-rEF} 25
12.7 Temperature Probe Setup {rtd} 26
12.8 Set Factory Defaults {rESEt}....26
12.9 Switch Off on AC Power disconnection {AC OFF}....26
12.10 Measurement Update Symbol {StAr}....26
12.11 GPIB Address {Addr}....26
13 Maintenance....27
13.1 Calibration....27
13.1.1 Zero Calibration 27
13.1.2 Routine Calibration 27
13.2 Hard Reset....27
13.3 Fuse Replacement....27
13.3.1 Current Range Fuses....27
13.3.2 Internal AC power fuse 28
13.4 Cleaning....28
13.5 Firmware Updates....28

14 Remote Operation 29
14.1 GPIB Interface 29
14.2 RS232 Interface 29
14.3 USB Interface and Device Driver Installation 30
14.4 LAN Interface 30
14.4.1 LAN IP Address and Hostname 31
14.4.2 mDNS and DNS-SD Support 31
14.4.3 ICMP Ping Server 31
14.4.4 Web Server and Configuration Password Protection 31
14.4.5 LAN Identify 31
14.4.6 LXI Discovery Tool 32
14.4.7 VXI-11 Discovery Protocol 32
14.4.8 VISA Resource Name 32
14.4.9 XML Identification Document URL 32
14.4.10 TCP Sockets 32
15 Status Reporting 32
15.1 Input Trip Registers (ITR & ITE). 33
15.1.1 Input Trip Register (ITR) 33
15.2 Standard Event Status Registers (ESR and ESE) 33
15.3 Execution Error Register (EER) 34
15.4 Status Byte Register (STB) and GPIB Service Request Enable Register (SRE) 34
15.5 GPIB Parallel Poll (PRE) 35
15.6 Query Error Register - GPIB IEEE Std. 488.2 Error Handling 35
15.7 Power on Settings 35
15.8 1908 Status Model 36
15.9 Register Summary 36
16 Remote Commands 37
16.1 General 37
16.1.1 Remote and Local Operation 37
16.1.2 Remote Command Handling 37
16.1.3 Remote Command Formats 37
16.1.4 Command Timing 38
16.1.5 Response Formats 38
16.2 Command List 39
16.2.1 General Commands 39
16.2.2 Main Display Commands 40
16.2.3 Dual Measurement Mode Commands 42
16.2.4 First Level Modifier Commands 42
16.2.5 Second Level Modifier Commands 43
16.2.6 Data Logging Commands 44
16.2.7 Common Commands 45
16.2.8 Status Commands 45
16.2.9 Interface Management Commands 46
17 Default Settings 47
18 Graphical Interface PC software 48
19 Specifications 49

Note: This manual is 48581-1470 Issue 3

1 Product Description

This precision bench-top/portable multimeter has dual measurement capability and a dual display which can show either two independent measurements, a measurement together with its range value, or a measurement with one of the many programmable functions available.

The key features are:

- Operation from AC line or built-in rechargeable batteries.
- 0.02% basic accuracy, 120,000 counts.
- Manual or Auto-ranging.
- DC and AC Volts, DC and AC current, Resistance, Capacitance, Frequency, and Temperature measurement; Continuity and Diode checks.
- True RMS AC and AC+DC measurement.
- Two or Four wire selectable ohms measurement.
- Display nulling and Ohms null.
- Selectable measurement speed.
- Touch hold mode - holds onto a stable reading until updated.
- 500 point data logger with timer.
- Temperature measurement for PT100 or PT1000 sensors.
- Measurement post-processing to give:

  dB and power measurement with settable reference impedances

  percentage deviation from a user-entered reference

  linear scaling with offset

  limits comparison for go/no go testing

  automatic storage of minimum and maximum readings.
- Remote control via USB interface (1908)
- Remote control via USB, RS232, GPIB and LAN (LXI) interfaces (1908P)
- External input/output remote triggering.
- 1908-PC Link software providing:

  Remote control of main functions

  Logging function with graphical & tabular displays

  Logged data can be exported to a CSV file
- Closed case calibration.
- Fully compliant with EN61010-1, EN61010-2-030 & EN61010-2-033 Safety, and EN61326-1 EMC standards.

2 Safety

This multimeter has been designed to meet the requirements of EN61010-1, EN61010-2-030 & EN61010-2-033 (relevant parts of the 'Safety Requirements for Electrical Equipment for Measurement, Control and Laboratory Use' standards). It can be operated from its built-in rechargeable battery or from a standard AC mains supply (Overvoltage Category II). When connected to AC mains, it is a Safety Class I instrument.

WARNING! THIS INSTRUMENT MUST BE EARTHED

Any interruption of the mains earth conductor inside or outside the instrument will make the instrument dangerous. Intentional interruption is prohibited. The protective action must not be negated by the use of an extension cord without a protective conductor.

When operated from the internal battery, without an AC mains connection, the multimeter should be earthed by connecting the rear panel Chassis Earth terminal to an external protective earth system. Without this connection, 'leakage' current from any accessible part may exceed the Normal (safe) limit of 0.5mArms under some extreme measurement conditions, e.g. high voltage, high frequency, AC volts measurement. Measurements to 300VACrms, 50/60Hz, for example, would not require this protective earth connection.

The test leads supplied with this instrument meet the requirements of EN61010-031 and are rated to 1000V Cat III; use only these test leads with the meter or a set of equivalent performance.

This instrument has been tested in accordance with EN61010-1 and has been supplied in a safe condition. This instruction manual contains some information and warnings which have to be followed by the user to ensure safe operation and to retain the instrument in a safe condition.

This instrument has been designed for indoor use in a Pollution Degree 2 environment (only dry non-conductive pollution occurs except that occasionally a temporary conductivity caused by condensation is expected) in the temperature range 5°C to 40°C, 20% - 80% RH (non-condensing). It may occasionally be subjected to temperatures between +5° and −10°C without degradation of its safety.

It has been designed for measurement use to 1000VDC/750VACrms in circuits isolated from AC mains power (derived secondary circuits within an equipment) with occasional transient over-voltages up to 1500Vpeak. It can also be used for CAT II (Measurement Category II) use to 600VDC/ACrms, and CAT III use to 300V DC/ACrms. CAT II is local domestic supply level, e.g. portable equipment and appliances; CAT III is mains distribution parts of a building.

For this equipment 4000V is the maximum peak transient overvoltage that can be tolerated by any terminal with respect to earth ground without impairing safety.

Use of this instrument in a manner not specified by these instructions may impair the safety protection provided. Do not operate the instrument outside its rated supply voltages or environmental range. In particular excessive moisture may impair safety.

When the instrument is connected to its supply or its inputs are connected to live voltages, terminals may be live and opening the covers or removal of parts (except those to which access can be gained by hand) is likely to expose live parts. The apparatus shall be disconnected from all voltage sources before it is opened for any adjustment, replacement, maintenance or repair, including the replacement of the current range protection fuses. Any adjustment, maintenance and repair of the opened instrument under voltage shall be avoided as far as possible and, if inevitable, shall be carried out only by a skilled person who is aware of the hazard involved.

If the instrument is clearly defective, has been subject to mechanical damage, excessive moisture or chemical corrosion the safety protection may be impaired and the apparatus should be withdrawn from use and returned for checking and repair. Make sure that only fuses with the required rated current and of the specified type are used for replacement. The use of makeshift fuses and the short-circuiting of fuse holders is prohibited.

Do not wet the instrument when cleaning it and in particular use only a soft dry cloth to clean the display window.

Symbols

The following symbols are used on the instrument and in this manual:



WARNING - risk of electric shock.



CAUTION - refer to accompanying documentation; incorrect operation may damage the meter.

CAT II Measurement Category II. Inputs may be connected to AC mains power under Category II overvoltage conditions

CAT III Measurement Category III. Inputs may be connected to AC mains power under Category III overvoltage conditions



mains earth (ground)



Protective Earth terminal



direct current



alternating current



Standby supply. Instrument is not disconnected from AC mains power when switch is off.

3 Installation

3.1 **Mains Operating Voltage**

Check that the instrument operating voltage marked on the rear panel is suitable for the local supply. Should it be necessary to change the operating voltage, proceed as follows:

1. **Warning!** Disconnect the instrument from all voltage sources before beginning this procedure.
2. Pull out both sides of the handle at the case pivot points, to free the position locking pegs, and rotate the handle from the stowed position to the position shown below. Then pull the sides of the handle outwards fully, one at a time, to remove the handle completely.

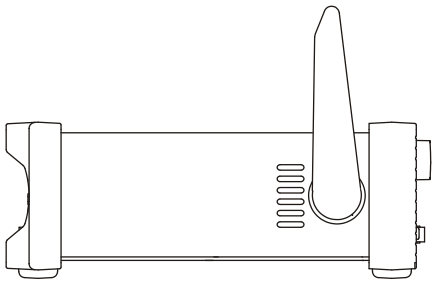

3. Remove the two screws on the rear panel that retain the top cover and slide the top cover towards the rear, with the soft bezel still in place, until it can be lifted clear.

   Note: To avoid contaminating or damaging the PCB assembly, take care not to touch any components other than the two shorting connectors described in the next step.

4. Remove the shorting connector in position PJ4 on the PCB beside the mains transformer (TX1) and replace it with the alternative shorting connector from the 'parking' position PJ8; align pin1 of the connector with the pin 1 corner marker of the header. 'Park' the unused connector on PJ8, see the diagrams below.

   For 230V operation PJ4 should be fitted with the connector which has a single red wire between its centre pins (pins 2 & 3).
   For 115V operation PJ4 should be fitted with the connector which has a blue wire between pins 1 & 3, and a brown wire between pins 2 & 4.
   Note that the value of fuse FS3 (500mA) is the same for both AC voltage settings, see Maintenance, section 13.

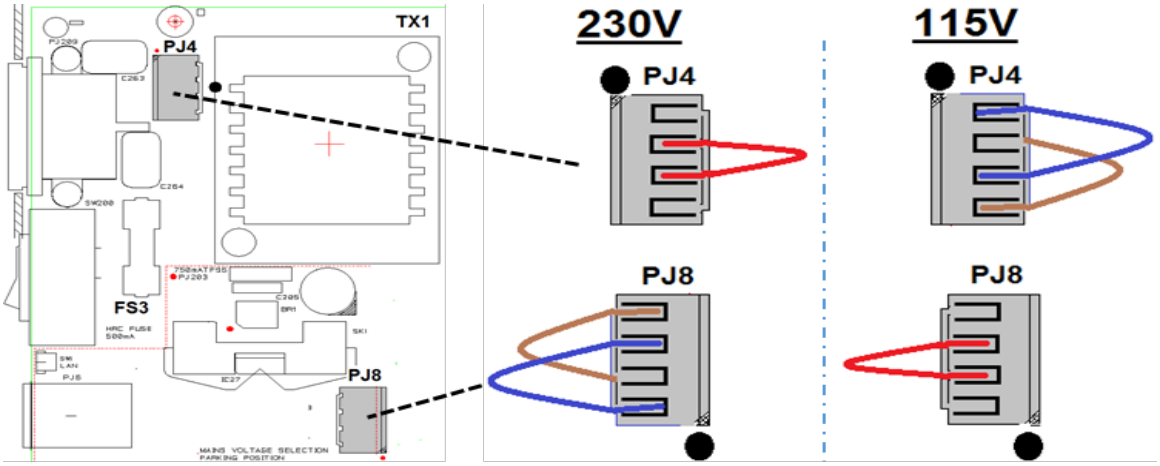

5. Reassemble in the reverse order.
6. To comply with safety standard requirements the operating voltage marked on the rear panel must be changed to clearly show the new voltage setting.

3.2 **Mains Lead**

For AC mains operation, connect the instrument to the AC supply using the mains lead provided. Should a power plug be required for a different power outlet socket, a suitably rated and approved mains lead set should be used which is fitted with the required wall plug and an IEC60320 C13 connector for the instrument end. To determine the minimum current rating of the lead-set for the intended AC supply, refer to the power rating information on the equipment or in the Specification.

WARNING! THIS INSTRUMENT MUST BE EARTHED.

Any interruption of the power earth conductor inside or outside the instrument will make the instrument dangerous. Intentional interruption is prohibited.

3.3 **Mounting**

This instrument is suitable both for bench use and rack mounting. It is delivered with soft protective front and rear bezels which have integral moulded feet; this is the most suitable configuration for bench use.

For rack mounting the protective bezels and handle/stand can be removed such that the instrument can be fitted beside any other standard 2U half-rack instrument in a 19” rack. A suitable 2U 19” rack kit is available from the Manufacturers or their overseas agents; full details of how to remove the handle and bezels are included with the kit.

3.4 **Handle/stand**

The instrument is fitted with a 4-position handle/stand. Pull out both sides of the handle at the case pivot points, to free the position locking pegs, and rotate the handle from the stowed position to the required stand or handle position. Release the sides of the handle to lock it in the new position.

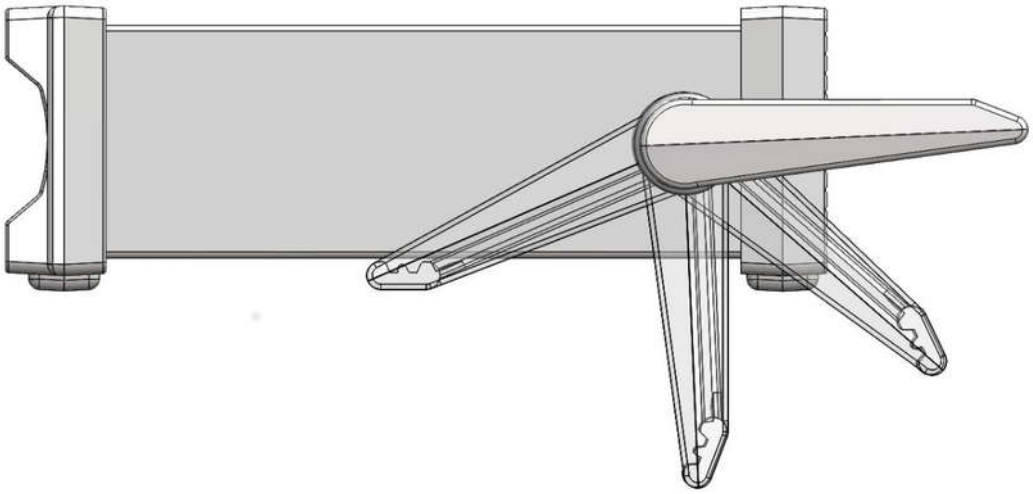

4 Getting Started

4.1 Using this Manual

In this manual front panel keys are shown in bold square brackets, e.g. **[Vdc]**, **[Function]**. Sockets are shown in bold capitals, e.g. **INPUT HI**. LCD display data is show in bold curly brackets, e.g. **{SPEEd}**, **{AUTO}**.

The manual is available in printed form and as an electronic document in PDF format. The manual includes cross references which are underlined within the text. These are hyperlinks within the PDF document. The Table of Contents is also fully hyperlinked.

Hyperlinks enable the user to jump rapidly to the section referred to and then jump back to continue reading the original section. (N.B. for hyperlink navigation within Acrobat Reader, enable “show all page navigation tools” or use the keyboard shortcuts Alt+Left_Arrow and Alt+Right_Arrow).

4.2 Installation and Safety

Before first use, all users should read the Safety Information in section 2 .

Before connecting AC power, check that the instrument operating voltage marked on the rear panel is suitable for the local supply. Should a change be required, read section 3.1

Connect the instrument to the AC supply using the mains lead provided. Should a power plug be required for a different power outlet socket, refer to section 3.2.

4.3 AC Power and Battery Operation

The instrument can be operated from AC power or from internal rechargeable batteries which are recharged as required when AC power is connected. A red LED is illuminated whenever AC power is connected and a yellow LED is illuminated whilst charging is taking place.

Battery Life from fully charged is approximately 20 hours with the backlight on, and up to 35 hours with the backlight off. Under battery operation a battery symbol will appear on the display if the charge level falls below about 10%. The approximate charge level can be checked from the Utilities menu – see section 12.5.

For the 1908P, operation of the remote interfaces (excluding USB) is only possible with AC power connected.

4.4 Switching On and Off

The instrument behaves differently depending upon whether or not AC power is connected.

4.4.1 On/Off operation with AC Power

If required, AC power can be switched on or off using the **POWER** switch mounted on the rear panel. When the AC power is switched off the default setting is for the instrument to turn off. This ensures appropriate behaviour when used as part of a group of equipment for which AC power is turned on or off simultaneously.

Note: To fully disconnect from the AC supply unplug the mains cord from the back of the instrument or switch off at the AC supply outlet; make sure that the means of disconnection is readily accessible. Disconnect from the AC supply when not in use.

The green front panel button marked **[OPERATE]** can be used to place the instrument into Standby if required. Successive presses will alternate between On and Standby.

Alternative AC Power Switching Options

The response of the instrument to AC power being connected or disconnected can be altered if required. The actions described above are the default conditions, and can be changed from the Utilities menu – see section 12.9.

4.4.2 On/Off operation without AC Power

With no AC power connected, operation is from the internal rechargeable batteries and the instrument is turned on or off by successive presses of the green **[OPERATE]** button. The rear panel **POWER** switch has no function.

4.4.3 Power-up Settings

At power up the display briefly shows the installed software revision; the instrument is then restored to the same measurement conditions as at power down, including any advanced functions that were running. However, if the instrument was showing a menu at power down, the menu will be cancelled when powered up.

---

5 Measurement Connections

5.1 Input Sockets

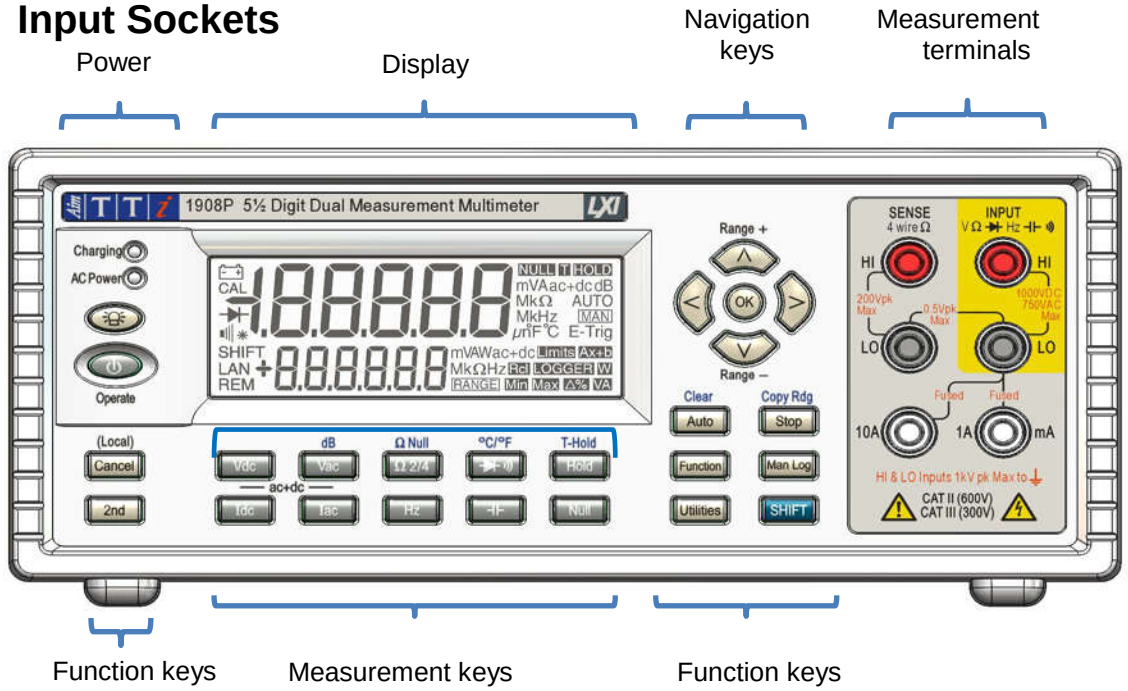

The input sockets are 4mm safety sockets on a 19mm pitch designed to accept 4mm safety plugs with fixed or retractable shrouds. All sockets are rated to 1000Vpeak with respect to earth ground. Safety will be maintained if voltages up to 1000Vpeak are accidentally applied between inappropriate terminals in excess of their marked ratings, but restoration of normal operation may require replacement of protection devices (e.g. current range fuses).

The input impedance between **INPUT HI** and **INPUT LO** is nominally 10MΩ on dc ranges and 1MΩ on ac ranges. The black **LO** socket is considered less positive than the red socket. The maximum voltage that can be applied between **HI** & **LO** is 1000Vdc, 750Vrms (1000Vpeak). The sockets are rated to 600V CAT II, 300V CAT III.

The **mA**/**10A** current sockets are low impedance; the voltage burden between **mA**/**10A** and **LO** at full scale is <100mV for the 10mA range and <600mV for the 100mA, 1A and 10A ranges. The black **LO** socket is considered less positive than the white **mA**/**10A** sockets. The **mA**/**1A** socket is protected with a 1.6A 1kV HRC fuse, and the **10A** socket with a 10A 1kV fuse; see Maintenance, section 14, for replacement details.

The **SENSE HI & LO** sockets are only used in 4-wire Ohms and RTD temperature measurements; refer to those sections for details. When used, the maximum differential between **SENSE LO** and **INPUT LO** should be < 0.5Vpeak. The **SENSE** terminals are protected against accidental connection of up to 200Vpeak between **HI** & **LO**.

5.1.1 Multimeter Test Leads

The test leads supplied meet the requirements of IEC1010-031 and are rated to 1000V Cat III. Use only the test leads provided, or a set of similar performance, to ensure safe operation. Alternative test leads should be rated to at least 1000V, 600V (Cat II) and 10A current capability.

5.2 Rear Panel Connections

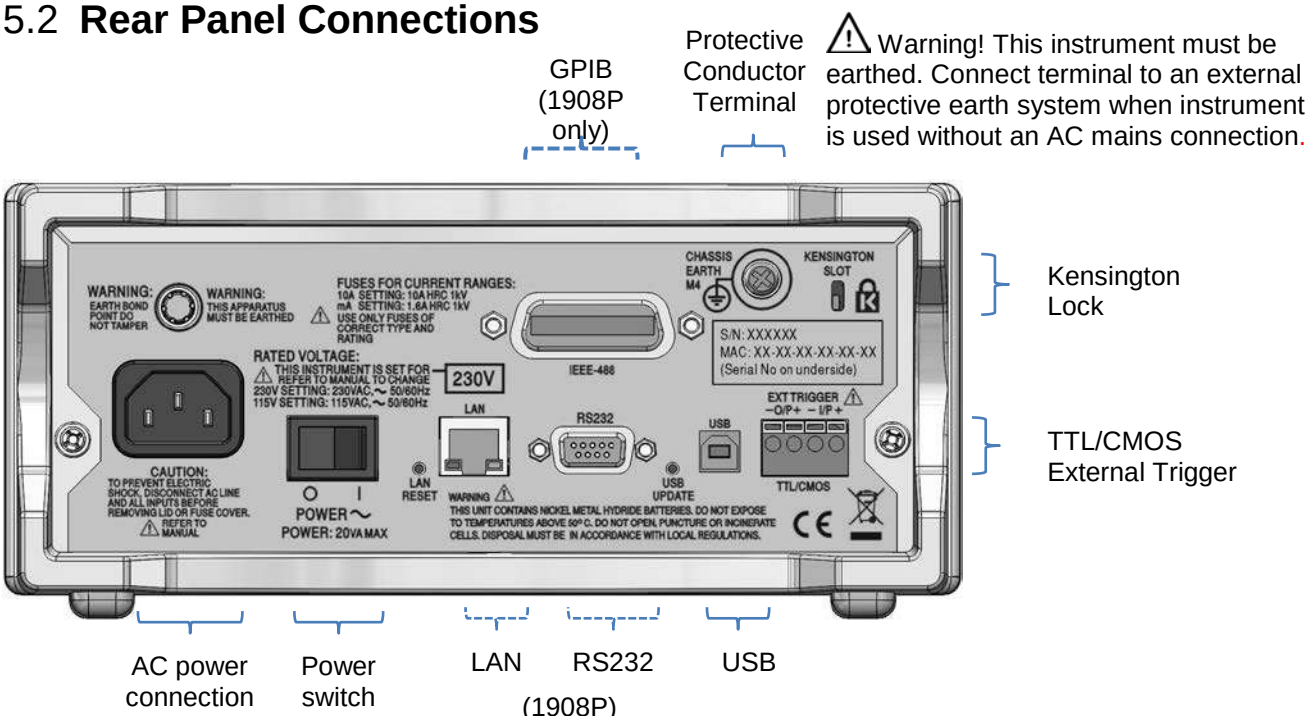

5.2.1 Trigger In/Out

Screw-less connectors are provided on the rear panel for the connection of an external trigger signal, and a trigger out signal. See section 9 for full details.

5.2.2 Digital Interfaces

Depending upon model, rear panel connectors are provided for USB only (1908) or USB, RS232, LAN and GPIB (1908P). Refer to Remote Operation, section 14, for full details.

5.2.3 AC Inlet

The instrument can be connected to AC mains using the power lead supplied or a suitable alternative, see Installation section 3.2. When the power lead is connected this lead provides the necessary protective earth connection to an external protective earth system.

5.2.4 Protective Earth Terminal

For battery only operation, without an AC power lead connected, the M4 threaded chassis connection marked ⏚ must be connected to an external protective earth system via a green/yellow insulated cable, with a cross-section of at least 0.75mm^2, fitted with a M4 terminal. Without this connection, 'leakage' current from any accessible part may exceed 0.5mArms, the Normal (safe) limit specified by EN61010-1, under some extreme measurement conditions, e.g. high voltage, high frequency, AC volts measurement.

. **WARNING! THIS INSTRUMENT MUST BE EARTHED.**

6 Making Basic Measurements

This section describes how basic measurements are made, i.e. single measurement mode without post-processing of the results.

6.1 Scale Length

The scale length is ±120,000 for all measurements except frequency (full scale 12,000) and capacitance (full scale 1200). **{OFL}** is displayed when the range maximum is exceeded.

Note, however, that safety considerations limit the maximum voltage and current that can be measured to below the scale length maximum.

6.2 Measurement Parameter Selection

Refer to the front panel diagram in section 5.1
The two rows of darker grey keys below the display directly select the measurement parameters for either the primary or secondary display. When pressed alone the parameter keys select the measurement parameter for the primary display, cancel any secondary functions, and set the range to auto-range.

Pressing **[2nd]** followed by a parameter key selects the parameter for the secondary display; this is explained fully in Dual Measurement Mode, section 8, which also details the combinations of parameters that can be used.

Additional parameters marked in blue above certain keys are selected by first pressing **[SHIFT]**. Whilst shift is operational a **{SHIFT}** symbol appears on the left side of the display.
See section 7 for full details.

6.3 Measurement Range Selection

Refer to the front panel diagram in section 5.1, and to the display diagram below.

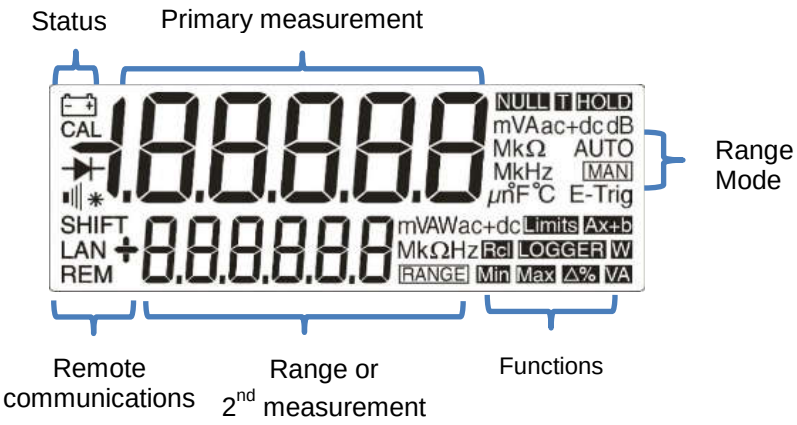

When a parameter is first selected, auto-ranging is enabled and an **{AUTO}** symbol is displayed. Pressing either of the **[Λ]** / **[v]** arrow keys (**Range+/Range-**) cancels auto-ranging whilst leaving the range set to its existing value. The **{MAN}** symbol is displayed and further presses then change the range upwards or downwards. Pressing **[OK]** returns the instrument to auto-ranging operation.

The units appropriate to the function and range (e.g. **{mV ac}**) are shown to the right of the display. When the secondary display is not being used to show measurement values, the selected range is shown there.

Note that the 10A range, which uses a different input socket from mA measurements, can only be selected manually. Once 10A has been selected, however, this setting will be retained for current measurement until it is returned to mA.

Note that the **{AUTO}** and **{MAN}** symbols apply only to the primary display.

6.4 **Making Voltage Measurements**

Having selected Vdc or Vac, voltage measurements are made using the red **INPUT HI** socket and the black **INPUT LO** socket within the yellow area of the panel. Five measurement ranges (auto or manual) are available from 100mV to 1000V (dc) or 750V (ac).

The meter will show a minus sign **{-}** (on dc measurements) when the voltage applied to the **INPUT HI** socket is more negative than that applied to the **INPUT LO** socket.



The maximum voltage that can be applied between **INPUT HI** and **LO** is 1000V DC or 750V AC; damage to the instrument may result if this limit is exceeded.

WARNING! The maximum input voltage to ground must not exceed 1000V peak. Safety will be impaired if these ratings are exceeded, see Safety section at the beginning of the manual.

6.5 **Making Current Measurements**

Having selected Idc or Iac, current measurements up to 1.2A (1200.00mA) are made using the white **mA** socket and the black **INPUT LO** socket; current measurements up to 10A are made using the **10A** and **LO** sockets. The meter will show a minus sign **{-}** (on dc measurements) when the polarity of the current is such that it flows out of the **mA** or **10A** sockets rather than into it.

Using the **mA** socket three measurement ranges (auto or manual) are available from 10mA to 1000mA. Measurements up to 10A can be made using the **10A** socket having manually ranged to 10A with **[∧]**.

The 10mA, 100mA and 1000mA ranges, using the **mA** socket, are protected by a 1.6A (F) HRC fuse. The 10A range, using the **10A** socket, is protected by a 10A (F) HRC fuse. Both fuses are accessed via a panel on the base of the instrument.



The input test leads and AC power lead must be disconnected before opening the fuse access panel.

Note: After measuring high currents (i.e. above half scale) using the 1A or 10A ranges, thermal voltages are generated that may create errors when making measurements on the most sensitive dc voltage, current or Ohms ranges immediately afterwards. To ensure that the specified accuracy is maintained, allow 10 minutes for the thermal effects to reduce before making sensitive measurements.

6.6 **Making Resistance Measurements**

Pressing **[Ω 2/4]** selects resistance measurement in either 2 wire or 4 wire mode. Successive presses alternate between the modes as indicated by **{2WΩ} or {4WΩ}** appearing briefly in the secondary display. Six measurement ranges (auto or manual) are available from 100Ω to 10MΩ.

6.6.1 Two Wire Measurements

Normal (2 wire) resistance measurements are made using the **INPUT HI** and **LO** sockets within the yellow area of the panel. This measurement mode is appropriate for higher resistance measurements, and for lower resistance measurements where high precision is not required.

The effects of test lead resistance can be removed using Ω Null if required – see section 7.3.

6.6.2 Four Wire Measurements

4 wire measurements are appropriate for precision measurement of low resistances where the effects of the connecting leads and contact resistances are significant. 4 wire measurement uses the **HI** and **LO SENSE** sockets in addition to the **HI** and **LO INPUT** sockets. Connections are made as shown below.

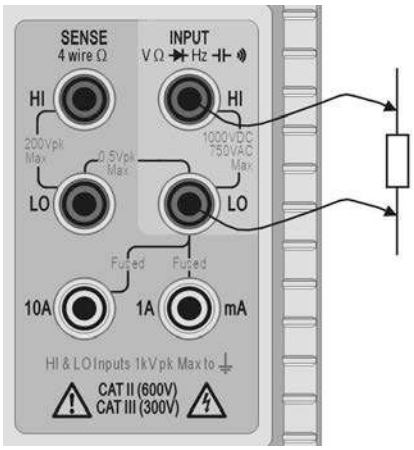

Two Wire Measurement

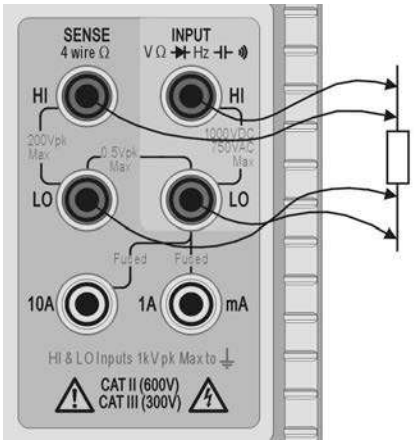

Four Wire Measurement

Because no significant current is flowing through the SENSE connections when utilising 4 wire measurement, contact resistance does not affect the measurement result.

6.7 Making Continuity and Diode Checks

Pressing **[⊣◀)]** selects either continuity measurement or diode test. Successive presses alternate between the two as indicated by symbols on the left side of the display. Continuity and diode checks are made using the **INPUT HI** and **LO** sockets within the yellow area of the panel.

6.7.1 Continuity Measurement

Setting continuity causes the 1000Ω range to be selected such that readings below approximately 10Ω will sound the continuity buzzer. Readings above the range maximum will show **{OPEn}.**

6.7.2 Diode Checks

Setting diode check causes the 1000mV range to be selected and a current of approximately 1mA to flow out of the **INPUT HI** socket. With the anode of the diode connected to this terminal the diode forward voltage will be shown. Reverse diode connection will show **{OFL}**.

6.8 Making Frequency Measurements

Pressing **[Hz]** selects frequency measurement. Measurements are made using the **INPUT HI** and **LO** sockets within the yellow area of the panel. Four ranges (100Hz to 100kHz) are available, giving resolutions of 10mHz to 10Hz respectively over an operating frequency range of <10Hz to 120kHz. Reciprocal counting techniques ensure fast reading updates (4 readings/second) even on the lowest range. This can be increased to 8 readings/second in fast speed mode see section 12.2; however the slow speed mode should always be used when measuring low frequencies in the 100Hz range to ensure accurate readings.

Measurements are made using the ac Volts input circuitry which is auto-ranged to provide suitable sensitivity. At low signal levels use a screened lead and an adaptor (BNC to 4mm plugs, 19mm pitch) to preserve signal quality and avoid spurious readings from stray pick-up. The minimum measurable signal is <30mV rms across the frequency range (100mV range) or <10% of range maximum for other ac voltage and current ranges.

Frequency can also be measured in dual measurement mode, see section 8.1.

6.9 **Making Capacitance Measurements**

Pressing **[⊣⊢]** selects capacitance measurement. Measurements are made using the **INPUT HI** and **LO** sockets within the yellow area of the panel. Five ranges (10nF to 100µF) are available with 1200 count full scale giving resolutions of 10pF to 100nF respectively.

Zero calibration at the factory is carried out with no test leads connected; ideally, capacitors to be measured should be connected directly to the sockets. Test leads, if used, should be kept as short as possible to minimise stray capacitance but nevertheless a non-zero reading will generally be present when the lowest ranges are selected. To eliminate this offset it is recommended that the meter reading is nulled, once the required range has been selected, with the test leads in their measurement positions but no capacitor connected.

It is also recommended that battery operation is used when making capacitance measurements, to minimise reading jitter. Note that, because the capacitor is discharged between each measurement, the reading rate on the 100µF range is slower.

6.10 **Over Voltage Protection**

When making measurements of Resistance, Capacitance, Temperature, Continuity or Diode checks an internal protection circuit protects the current source from source voltages applied to the **INPUT HI** and **LO** sockets. If a voltage of greater than typically 10V is applied to the **INPUT HI** and **LO** sockets the protection circuit will be engaged, the buzzer will sound and **{trIP}** will be displayed. After completion of the trip event, the measurement mode is set to Vdc to show the over-voltage that is being applied to the input sockets. BIT 0 of the Input Trip Register (ITR) is set to 1 (over voltage protect) see section 15.1.

6.11 **Measurement Hold**

Hold operates only on the primary display. Pressing **[Hold]** causes the measurement to be frozen on the display along with a **{HOLD}** symbol. Provided that the meter is not in dual measurement mode and not measuring capacitance, the normal, updated, reading will be shown in the secondary display.

Hold only operates on the primary display, any measurement being shown on the secondary display will continue to update normally.

Hold is cancelled by pressing **[Hold]** again, or by changing range or function.

6.12 **Measurement Null**

Null operates only on the primary display. Pressing **[Null]** causes the measurement to be stored and subtracted from all future readings. Pressing **[Null]** locks the meter in the selected range and shows **{NULL}** (and **{MAN}**) symbols. Provided that the meter is not in dual measurement mode and not measuring capacitance, the normal, un-nulled, reading will be shown in the secondary display.

Null is cancel by pressing **[Null]** again, or by changing range or function.

6.13 **The Cancel Key**

[Cancel] can be used to return the meter to a basic measurement mode. It cancels dual measurement mode, dB, Null, Hold and T-Hold, and any programmable functions including the Logger. It does not cancel Ω Null.

Consequently **[Cancel]** should not be used to cancel a single function, such as Hold, if other functions need to be maintained.

7 Additional Parameters and Functions

A number of additional capabilities can be accessed using the measurement parameter keys, as described below. Further functions also can be selected from the Functions menu key – see section 10.1

7.1 Combined AC + DC Measurements

Vdc+Vac or Idc+Iac measurements are made by pressing both keys together. The reading displayed is the RMS sum $\sqrt{(dc^2 + ac^2)}$ and ac+dc is shown on the display.

Both ac and dc measurements are made on the same range: the instrument will auto-range to a range which gives an in-range reading for both the ac and dc component of the parameter. Clearresult to be shown as an in-range reading.

Note that this is a special case of Dual Measurement mode (see section 8.3) and the measurement update rate is slowed accordingly.

7.2 Decibel Measurement (dB)

dB (deciBel) can be selected only when Vac is already in the main display. Pressing **[Shift]** followed by **[Vac]** shows the dB value of the Vac measurement (referred to the chosen impedance setting) and displays the **{dB}** symbol. If no secondary function is selected the normal reading in volts will be shown in the secondary display.

dBs are shown in a fixed format with 0.1dB resolution, whatever range the Vac measurement is being made on. The value displayed is in dBm and is calculated from the formula:

$$dB = 10 \log_{10} (1000 \times V^2/R)$$, where R is the selected reference impedance.

The default reference impedance is 600Ω but a different value can be selected within the Utilities menu. Press **[Utilities]**, use the Navigator keys to select **{rEF}** and confirm with **[OK]**. The existing reference value will flash. Alternative values can be selected using the Navigator keys and confirmed with **[OK]**.

Available values are 50, 75, 93, 110, 124, 125, 135, 150, 250, 300, 500, 600, 900, 1000, 1200, and 8000Ω. Pressing **[Shift]** followed by **[Auto]** (**Clear** is the shifted function of Auto) returns the value to 600Ω. Press **[Utilities]** again to exit the Utilities menu.

dB is cancelled by pressing **[Vac]**, or by selecting any other measurement parameter or function.

7.3 Removing Test Lead Resistance (Ω Null)

Residual test lead resistance can be nulled out using the Ohms Null facility as follows:

Connect the test leads together and press **[Shift]** followed by **[Ω 2/4]** (Ω Null is the shifted function of Ω). The 100Ω range is set automatically and the **{NULL}** symbol flashes; the meter stores the reading that it detects after 5 seconds provided that it is less than 1.000Ω (1000 counts). A beep sounds when the null is completed and the display should show zero Ohms and no **{NULL}** symbol.

If the reading cannot be nulled, because the offset is too large, the reading will not change and the buzzer will not sound.

The Ohms null is stored as a floating point value which is used on all ranges; it is not lost when the function is changed or when the instrument is turned off. Ohms null can be cancelled by selecting Ohms Null and not generating a sub 1.000Ω reading within the next 5 seconds, or by restoring the instrument to factory defaults – see section 12.8.

Normal Null can be used together with Ohms Null.

7.4 Temperature Measurement (ºC/ºF)

The instrument incorporates linearised measurements for PT100 and PT1000 platinum resistance temperature detectors (RTDs).

The temperature function is selected by pressing the shifted function marked °C/°F **[Shift]** **[→+)))]**. The default measurement is in degrees centigrade. To change to degrees fahrenheit select the function again.

The default probe type is PT100. To change to PT1000 use **[<]** / **[>]**.

The measurement can use either a 2 wire or 4 wire connection, the latter using the **HI** and **LO SENSE** terminals in addition to the **HI** and **LO INPUT** terminals. The selection is made from the Utilities menu – see section 12.7.

7.5 Touch and Hold (T Hold)

T-Hold causes the meter to “hold” a reading on the display until a new non-zero measurement has been detected; this allows the user to touch-probe the measurement point, remove the probes and read the meter afterwards. It is not available for Ohms, Continuity, or Diode Test measurements.

T Hold is selected by the shifted key marked T-Hold **[Shift] [Hold]**. The **{T-HOLD}** symbol is displayed, and each new reading is indicated by a beep sound. Measurement update is slow, and small changes to the signal that occur after the probes have been connected will not be shown.

Note that care should be taken when using T-Hold with the most sensitive voltage ranges; when the probes are lifted from the circuit being measured, their high impedance means that stray pick-up might generate another ‘valid’ reading and the true T-Hold reading may be lost.

T-Hold operates only on the primary display in both manual and auto-range modes; it is cancelled by pressing T-Hold again **[Shift] [Hold]** or by changing the measurement parameter or range.

7.6 Measurement Speed and Measurement Filter

The normal measurement speed is 4 readings/sec for most single measurement parameters. For voltage, current and resistance measurements, the speed can be increased to 20 readings/sec at the expense of resolution which reduces to 12,000 counts. This is done from the Utilities menu, see section 12.2.

In order to minimise jitter for sensitive measurements, an analogue filter is incorporated that provides high rejection of 50Hz or 60Hz noise. Where the user requires quicker response to signal changes, the filter can be switched off. This is particular relevant when the measurement speed is set to 20 readings/sec. The filter is controlled from the Utilities menu, see section 12.3.

7.7 Zero Re-Calibration

An automatic zero calibration of the basic DC measurement circuitry is performed every time that the instrument is switched on. However, if the meter has been stored at a temperature outside the specified operating range, and is switched on before it has fully acclimatised to the working environment, accuracy may be affected as the meter’s temperature changes. To ensure optimum accuracy, particularly on the 100mV and mA current ranges, zero calibration can be repeated when the meter has acclimatised by using the Null key as follows:

Press **[Null]** and continue to hold it down until **{nULL}** shows in the main display (about 3 seconds later). **{nULL}** continues to show whilst the auto-zero is being performed (typically 5 seconds); on completion the display returns to its previous mode.

Auto-zeroing in this way cancels Null if this was already selected; press **[Null]** again to re-select if required.

8 Dual Measurement Mode

In **Dual Measurement** mode a completely independent but complementary measurement can be made and displayed on the secondary display. The two independent measurements are actually made alternately, not simultaneously, and the display update rate for each measurement is consequently reduced.

Note that this is not the same as **dual display** mode, where both a measurement and a modified version of that measurement are displayed, e.g. ac Volts and the dB equivalent. In this case only a single measurement is being made and the measurement rate is unchanged; further information is given later in this section.

8.1 **Dual Measurement Combinations**

The full list of dual measurement functions is as follows:

Main Measurement	Secondary Measurement
Vdc	Vac, Idc, Iac
Vac	Vdc, Idc, Iac, Hz
Vdc + Vac	Vdc, Vac, Hz
dB	Vdc, Idc, Iac, Hz
Idc	Vdc, Vac, Iac
Iac	Vdc, Vac, Idc, Hz
Idc + Iac	Idc, Iac, Hz
Hz	Vac, Iac

The parameter for the secondary display is selected by pressing **[2nd]** followed by the chosen measurement parameter. The secondary display parameter must be selected after the main parameter has been set. Pressing an illegal parameter will cause a warning double beep and the key entry will be ignored

Capacitance, Ω, and Continuity/Diode check cannot meaningfully be combined with other measurements and are therefore always excluded from the secondary display. Vac+Vdc and Iac+Idc are also excluded because they already involve dual measurements; when they are being used no secondary display can be set.

The secondary measurement, with the exception of the 10A current ranges, always auto-ranges. The 10A current ranges are set by first selecting the function (**[2nd]** followed by **[Iac]** or **[Idc]**) then pressing **[2nd]** followed by **[∧]**. To return to the mA measurement select **[2nd]** followed by **[v]**. However, if both main and secondary displays are making current measurements, the range of the secondary measurement is always that of the main display.

If Vdc and Vac are the two measurement functions, auto-ranging of the secondary display is restricted such that the dc measurement range is not lower than the ac range; this ensures that the dc measurement is not affected by a high ac signal, see the table within the Specification section 19.

For example, if the main display is set to 10Vdc the secondary display can auto-range between the 100mV, 1000mV and 10Vac ranges. In this example, low levels of ripple could be measured (on the 100mV range) on a 10Vdc supply rail, but an ac input >12V will cause the secondary display to show Overload **{OFL}** warning the user to select a higher main display dc range such that the secondary ac measurement is in range. Similarly, if the main display is set to 100Vac then the secondary display will not auto-range below 100Vdc, even for small dc inputs.

When frequency is selected for the secondary display the measurement is made using the ac range set in the main display. This presents no problems if the main display is in auto-range but if a higher range has been set manually, such that the reading is less than 5% of the range maximum, the signal level may not be adequate for frequency measurement.

8.2 **Making Voltage and Current Dual Measurements**

Measuring ac and dc Volts, or ac Volts and frequency, etc. still only require two measurement probes because both parameters of the dual measurement are made at the same physical point. Simultaneous measurement of voltage and current on the same circuit will however require a third connection, see the diagram:

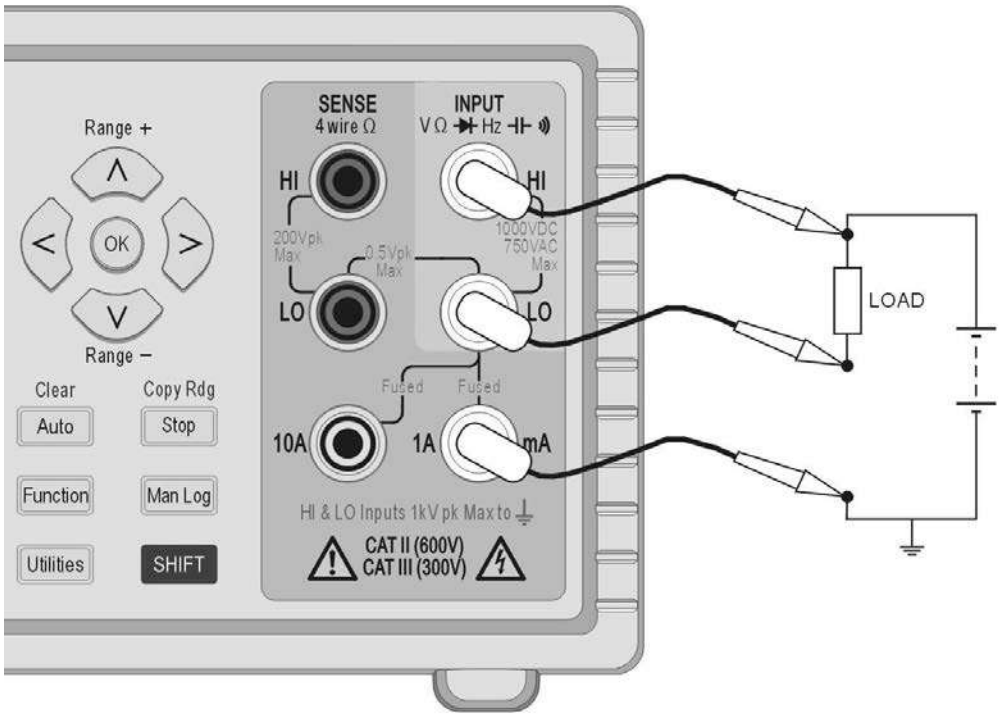

Note that the voltage measured at the multimeter terminals is that across the load ***plus the voltage drop in the common lead*** which is now carrying the whole circuit current. Even if the resistance of the lead is very low, errors may arise at high currents and low voltages (i.e. low load resistance) because the lead resistance becomes significant compared with the load.

8.3 **Measurement Update Times**

As discussed at the beginning of this section, the reading update rate is reduced in Dual Measurement Mode because the two readings are made alternately. However, the reading rate is not simply halved because enough time must be allowed for each measurement to fully settle to the different conditions before the display is updated; unless this is done neither display will reliably show the true measurement value. The settling time depends on the differences between the main and secondary measurement range, function, and signal level; the delay is longest when both displays show an ac measurement. Note that the settling times allowed assume a steady state signal; varying signals, or signals that exceed the range maximum on either measurement, will give unpredictable readings.

The following table summarises the measurement time (i.e. the time for the measurement to settle and the display to be updated) for each parameter in all the permitted display combinations.

Main	Secondary	Measurement Time (4SPS)	Measurement Time (20SPS)
Any Dual Function	None	.25s	.05s
Vac, dB, Iac	Hz*	.25s	.05s
Hz*	Vac, Iac	.25s	.05s
Vac, dB, Iac	Vdc, Idc	.5s	.1s
Vdc, Idc	Vac, Iac	.5s	.1s
Vac, dB	Iac	6s	3s
Iac	Vac	6s	3s
Vdc + Vac	Vdc, Vac, Hz	.5s	.1s
Idc + Iac	Idc, Iac, Hz	.5s	.1s

	Measurement Time (4SPS)	Measurement Time (20SPS)
*Any Hz dual measurement	.25s	.125s

Frequency measurements have a fixed measurement time (gate time) of 0.25s or 0.125s depending on the sample speed. This fixed measurement time only applies to the frequency measurement, not the other dual measurement. For example if the sample speed is set to fast (20SPS), the main measurement is Hz and the secondary measurement is VAC, then VAC will be updated every 0.05s but the frequency measurement will only update every .125s.

9 Triggered Operation

A screw-less connector on the rear panel provides both an input and output signal.

9.1 **Trigger In Signal**

The trigger input (**- I/P+**) connects to the LED of an opto-isolator through a 1kΩ resistor. Apply >+3V to set trigger input True; maximum safe applied input is +10V.

The trigger input can be set to perform either of two actions, as set from the Utilities menu – see section 12.4.

1. Hold measurement – the measurement in progress at the point that the input is set True is frozen on the display.
2. Log measurement – with the Logging function operating, the measurement in progress at the point that the input is set True will be logged.

9.2 **Trigger Out Signal (Measurement Complete)**

The trigger out signal (**- O/P+**) goes True each time an input trigger action is completed.

The trigger out signal is an opto-isolated open collector output with Low = True. The output conducts for 250ms on completion of an input trigger action.
The trigger output requires an external pull-up (e.g. 4.7kΩ to 5V) and sinks typically 2mA maximum when True; maximum safe off-state voltage is +10V.

10 Advanced and Programmable Functions

A number of additional functions are available via the Functions menu, accessed by pressing the **[Function]** key. These include:
Limits, Min/Max, Ax+b, Delta%, Watts and VA. An additional function of Logging is described in the next section.

All functions are mutually exclusive and use the secondary display to show the result. Consequently they cannot be used with any measurement that requires the secondary display such as dual measurements and dB. Selecting a function will cancel dual measurement mode.

To cancel a function, press **[Function]** again. Changing the measurement parameter or selecting dual measurements will also cancel a function.

10.1 **Selecting or Cancelling a Function**

A function is selected by pressing **[Function]**. This causes symbols for all of the available functions to be displayed, with the most recently used one flashing. The Navigator keys are then used to change the function (if required) and **[OK]** is used to select it.

A Function is cancelled by pressing **[Function]** again. Selecting a new measurement parameter will also cancel the function. Note that pressing **[Cancel]** will also cancel the function, but will also cancel other things such as Hold – see section 6.13.

10.2 **Limits**

High and low limits can be set, against which the reading is compared. When running, the main display shows the actual reading and the secondary display shows **{PASS}** (reading between or equal to set points), **{HI}** (reading >HI) or **{LO}** (reading <LO).

The units and decimal point position for the limit values are set by the existing measurement parameter and range which must be selected before the function is selected.

To select Limits, press **[Function]** and use the Navigator keys to choose **{Limits}** as the flashing symbol. Confirm with **[OK]**; the secondary display will flash the word **{run}**.

To view or edit the Limit values, press the Navigator **[<]** or **[>]** key to select **{Edit}** and confirm with **[OK]**. The existing High limit **{HI}** value will be displayed and can be changed using the Navigator keys (**[<]** / **[>]** to select the digit and **[∧]** / **[v]** to change the value). Once the value is set, it is confirmed with **[OK]**, after which the Low limit value **{LO}** can be viewed and edited in the same way.

Once the **{LO}** value has been confirmed the display will return to flashing the word **{run}**. Pressing **[OK]** at this point will start the function running.

The limits can be set anywhere in the range ±000000 to ±999999 with the decimal point set by the range selected during editing. Pressing the shifted key Clear **[Shift] [Auto]** enters the default value of +000000; pressing the shifted key Copy Rdg **[Shift] [Stop]** enters the current reading as the value.

Limit values are stored as floating point numbers which are retained for any range and any measurement parameter until **{Edit}** is selected again. At that point the displayed value, which may be truncated or under-flowed by the limitations of the display with a changed decimal point position, becomes the stored number.

10.3 **Ax + b**

When running, the scaled value (Ax + b) is shown in the secondary display and the normal value (x) is shown in the main display. If the scaled reading exceeds ±999999, **{-Or-}** is shown in the secondary display to indicate over-range.

The decimal point position for the b value is set by the existing measurement parameter and range which must be selected before the function is selected.

To select Ax + b, press **[Function]** and use the Navigator keys to choose **{Ax+b}** as the flashing symbol. Confirm with **[OK]**; the secondary display will flash the word **{run}**.

To view or edit the A or b values, press **[<]** or **[>]** to select **{Edit}** and confirm with **[OK]**. The existing A value will be displayed and can be changed using the Navigator keys (**[<]** / **[>]** to select the digit and **[∧]** / **[v]** to change the value). Once the value is set, it is confirmed with the **[OK]**, after which the b value can be viewed and edited in the same way.

Once the b value has been set and confirmed with **[OK]**, the display will return to flashing the word **{run}**. Pressing **[OK]** at this point will start the function running.

A is variable from ±00.0001 to ±99.9999, with the decimal point in a fixed position after the second digit; the default value is +01.0000, which can be restored by pressing shifted key Clear **[Shift] [Auto]**. The A value is retained for any range and any measurement parameter until changed using Edit.

b is a floating point number variable over the range ±000000 to ±999999 with the decimal point and units set by the range selected during editing. Pressing the shifted key Clear **[Shift] [Auto]** enters the default value of +000000; pressing the shifted key Copy Rdg **[Shift] [Stop]** enters the current reading as the value.

The b value is retained for any range and any measurement parameter until **{Edit}** is selected again. At that point the displayed value, which may be truncated or under-flowed by the limitations of the display with a changed decimal point position, becomes the stored number.

10.4 **Min-Max**

The Min-Max function stores the maximum (most positive) and minimum (most negative) values that occur when the function is run, and displays either in the secondary display simultaneously with the normal measurement in the main display.

To select Min-Max, press **[Function]** and use the Navigator keys to choose **{Min Max}** as the flashing symbols. Confirm with **[OK]**; the secondary display will flash the word **{run}**.

When running the maximum reading will be shown on the secondary display initially with the **{Max}** symbol displayed. Press **[<]** to view the Min value. Press **[<]** or **[>]** to alternate between displaying the maximum and minimum values.

Min and Max are stored as floating point numbers and the function can be operated with the meter changing ranges either manually or by auto-range.

After leaving the function, the values remain stored and can be viewed at any time. To do this re-select Min-Max as the function and use the navigator keys to select **{rECALL}**. Confirm with **[OK]** and use **[<]** and **[>]** to alternate between the two values which are shown on the primary display.

Pressing the shifted key Clear **[Shift] [Auto]** with either Max or Min displayed will reset it.

10.5 **Delta %**

The Delta % function displays the percentage deviation of the measurement from a reference value in the secondary display. The main display shows the normal reading.

$$\text{Delta \%} = \frac{\text{Reading - Reference}}{\text{Reference}} \%$$

The Delta % maximum display is ±999.99% and the resolution is fixed at 0.01%. The display shows **{–Or–}** (over-range) if the maximum is exceeded.

To select Delta %, press **[Function]** and use the Navigator keys to choose **{Δ%}** as the flashing symbol. Confirm with **[OK]**; the secondary display will flash the word **{run}**.

To view or edit the reference value, press the Navigator **[<]** / **[>]** to select **{Edit}** and confirm with **[OK]**. The reference value will be displayed and can be changed using the Navigator keys (**[<]** / **[>]** to select the digit and **[∧]** / **[v]** to change the value). Once the value is set and

confirmed with **[OK]**, the display will return to **{run}**. Pressing **[OK]** at this point will start the function running.

The reference value is can be number variable over the range ±000000 to ±999999; the decimal point position is set by the range in use during edit. The reference default value of 10000 (decimal point determined by range) can be entered by pressing the shifted key Clear **[Shift] [Auto]**. The latest meter reading can be entered by pressing the shifted key Copy Rdg **[Shift] [Stop]**.

10.6 **Watts**

The Watts function calculates power using the formula

$$\text{Watts} = V^2/R$$

It can only be run when Vdc or Vac are selected in the main display. The reference impedance can be set anywhere between 0.1 and 99999.9 Ohms.

To select Watts, press **[Function]** and use the Navigator keys to choose **{W}** as the flashing symbol. Confirm with **[OK]**; the secondary display will flash the word **{run}**.

To view or edit the reference value, press the Navigator Left or Right key to select **{Edit}** and confirm with **[OK]**. The reference value will be displayed and can be changed using the Navigator keys (**[<]** / **[>]** to select the digit and **[∧]** / **[v]** to change the value). Once the value is set confirmed with **[OK]**, the display will return to **{run}**. Pressing **[OK]** at this point will start the function running.

10.7 **VA**

The VA function calculates power by multiplying voltage and current readings. The meter must be connected for both voltage and current measurement, see Making Voltage and Current Dual Measurements, section 8.2, with Vdc or Vac selected for the main display.

To select VA, press **[Function]** and use the Navigator keys to choose **{VA}** as the flashing symbol. Confirm with **[OK]**; the secondary display will flash the word **{run}**. Pressing **[OK]** again will start the function running.

11 Data Logging

The logger function can store up to 500 readings from the main display in non-volatile memory. The store is linear, with no wrap-around. Readings are triggered by either the internal timer, manual key press, external trigger input (**-I/P+**) True, or remote interface command. Readings are stored as floating-point numbers with their units and reading number but without any form of time stamping.

11.1 **Setting-up the Logger**

To select the Logger, press **[Function]** and use the Navigator keys to choose **{LOGGER}** as the flashing symbol. Confirm with **[OK]**; the secondary display will flash the word **{run}**.

Use the Navigator keys to select **{Edit}** and confirm with **[OK]**. The primary display will show **{PEr}** (Period) with the secondary display showing the existing setting (default value = Off) **{OFF}**.

Manual or External Triggered Logging (Off)

With the period set to **{Off}**, the timer is inoperative and readings are stored only in response to the Man Log key, the Ext Trigger, or a Remote Interface command. To return to **{Off}** from another setting press the shifted key Clear **[Shift] [Auto]**. Confirm with **[OK]**.

To log from the external trigger input, the External Trigger function must be set accordingly – see section 12.4.

Logging Every reading (All)

With the period set to All **{ALL}**, the timer is inoperative and readings are stored after every measurement, i.e. at the measurement rate of 4 readings/sec or 20 readings/sec dependant on mode and measurement speed setting. To select All, first set the period to Off (using the shifted key Clear **[Shift] [Auto]**) and press **[v]**. Confirm with **[OK]**.

Logging from the Timer

To engage the timer starting from Off or All, press the Navigator Up key once or twice respectively. The display will show 0001 representing a timer period of 1 second. This can be changed to any value up to 9999 seconds using the Navigator keys (**[<]** / **[>]** to select the digit and **[∧]** / **[v]** to change the value). Confirm with **[OK]**.

Multiple Trigger Sources

A reading is logged in response to any valid trigger source. Thus, for example, the timer can be set to log at fixed intervals and additional intermediate readings logged by pressing **[Man Log]**, or generating an external trigger command.

11.2 Running the Logger

Once the logger has been set up as described above, confirmation of the period will return the secondary display to flashing the word **{run}**. Pressing **[OK]** at this point will start the logger running.

The reading number is shown in the secondary display (001 to 499). When the maximum number of readings is reached the display shows **{FULL}**. If the logger has existing readings stored, new readings will commence at the next available store number.

Note that all logging sources are OR'ed so that, the timer (if active), manual logging key, trigger input, or remote interface command can all cause a measurement to be stored.

11.3 Starting and Stopping the Logger

Logging can be paused by pressing **[Stop]**. This returns the display to show a flashing **{run}** and logging can be resumed by pressing **[OK]**. Alternatively logger Edit, Recall or Clear can be selected at this point.

When paused, no measurements, and no change to the measurement parameter or range, can be made. To make changes or view the measurement without logging, the function must be exited by pressing **[Function]**. Logging can be restarted by pressing **[Function]** and then pressing **[OK]** twice.

11.4 Recalling Logger Readings

Logger readings are held in non-volatile memory until cleared, and can be viewed at any time. To recall readings to the display, select the logger function and use the Navigator keys to select **{rECALL}**. Confirm with **[OK]**.

The last viewed logger position is shown in the secondary display with the associated measurement reading in the main display. Use the Navigator keys to scroll through the readings.

11.5 Clearing Logger Readings

To clear the contents of the logger, select the logger function and use the Navigator keys to select **{CLEAr}**. Confirm with **[OK]**. The secondary display will show **{nOnE}** and all logger entries will be cleared. It is not possible to clear individual logger entries.

Once cleared, the logger will commence from position 000 when run.

12 The Utilities Menu

A number of options can be set via the Utilities menu. Pressing **[Utilities]** will cause the main display to show **{–Util–}** with the currently selected menu item flashing in the secondary display. Use the Navigator keys to select the required item and select it with **[OK]**.

When selected the item name will appear in the main display with the current status flashing in the secondary display. Use the Navigator keys to change the status or value, and confirm it with **[OK]**.

Press the **[Utilities]** key again to exit the Utilities menu.

12.1 Beep Sound {BEEp}

An internal sounder is used to provide warnings of illegal actions or confirmation of completed actions; it also provides a short beep whenever a key is pressed when the condition is set to on **{On}**. The default condition is set to off **{Off}.** Note that even when the internal sounder is set to off, the continuity buzzer will still sound in continuity mode.

12.2 Measurement Speed {SPEEd}

The normal measurement speed is 4 readings/sec for most single measurement parameters. For voltage, current and resistance measurements, the speed can be increased to 20 readings/sec at the expense of resolution which reduces to 12,000 counts (Speed = fast) **{FASt}**. The default condition is slow **{SLO}**.

Note that Continuity measurements are always made at the higher speed. The measurement speed is indicated by a flashing asterisk symbol on the left of the display – see section 12.10.

12.3 Measurement Filter {FiLt}

In order to minimise jitter for sensitive measurements of DC volts and Resistance, an analogue filter is incorporated that provides high rejection of 50Hz or 60Hz noise. Where the user requires quicker response to signal changes, the filter can be switched off **{OFF}**. This is particularly relevant when the measurement speed is set to Fast.

The default condition is on **{On}**.

12.4 External Trigger {E-tr}

The external trigger input can be used to hold the display reading **{HOLD}** or to initiate a logging entry **{LOg}**, or to have no function **{OFF}.** The default value is Off **{OFF}**.

12.5 Battery Condition {bAtt}

The approximate battery charge level can be shown.

When fully charged the display will show: **{E - - - - F}**.

As the battery discharges it will change to **{E - - - F}** (75%), **{E - - F}** (50%), **{E - F}** (25%), and at approximately 10% to **{COnnECt AC}** (scrolling). This is also the point at which the battery symbol appears on the main display.

When the instrument is connected to AC power, the display will show **{CHArgE}** (charge).

12.6 dB Reference Impedance {db-rEF}

The reference impedance for AC voltage measurements can be changed to any of the following: 50, 75, 93, 110, 124, 125, 135, 150, 250, 300, 500, 600, 900, 1000, 1200, and 8000Ω

The default value is 600Ω **{600W}**.

12.7 **Temperature Probe Setup {rtd}**

The temperature measurement function can be set to use a two wire **{2W}** or four wire **{4W}** connection - the latter using the **SENSE** sockets in addition to the **HI** and **LO INPUT** sockets.

The default value is four wire **{4 W}**.

12.8 **Set Factory Defaults {rESEt}**

The instrument can be returned to factory defaults. This will return all values to their defaults and clear any stored data.

When **[OK]** is pressed, the display will show Accept? **{ACCEPt}.** The reset is performed when **[OK]** is pressed again. Alternatively use the navigator keys to select Cancel **{CAnCEL}** and press **[OK]** to exit the reset function.

12.9 **Switch Off on AC Power disconnection {AC OFF}**

The action of the instrument when AC power is disconnected can be changed. Three options are available: Normal **{OFF},** Auto **{AUtO}** or Battery **{bAtt}.**

For the default condition, AC OFF set to Normal **{OFF}**, the instrument is restored to its previous state prior to power down (on or standby) when AC power is applied and turned off when the AC power is disconnected.

There are situations where the instrument should remain on (operating under battery power) when the AC power is disconnected, e.g. when logging readings over an extended period; for these, the Auto or Battery settings will be more appropriate.

With AC OFF set to Auto **{AUtO},** the instrument is restored to its previous state prior to power down (on or standby) when AC power is applied but the action when AC power is disconnected depends upon how the instrument was turned on. If the instrument was turned on by connection of AC power, removing the AC power will turn it off (as in the default condition). However, if the instrument was turned on from battery power, removing the AC power will not turn it off.

With AC OFF set to Battery **{bAtt}**, connecting or disconnecting the AC power does not turn the instrument on or off.

12.10 **Measurement Update Symbol {StAr}**

The measurement update is shown by a flashing asterisk **{ * }** (star) symbol on the left side of the display. The symbol becomes continuous in fast measurement mode. If required the symbol can be turned Off. The default condition is On **{On}**.

12.11 **GPIB Address {Addr}**

The GPIB address can be set between 0 and 31. The default address is 1.

13 Maintenance

Routine maintenance is limited to re-calibration, resetting and cleaning. The only repair maintenance that can be carried out by the user is current range fuse replacement.

13.1 Calibration

13.1.1 Zero Calibration

If the meter has been stored at a temperature outside the specified operating range, and is switched on before it has fully acclimatised to the working environment, meter accuracy may be affected as the meter's temperature changes. To ensure optimum accuracy the zero calibration can be repeated when the meter has acclimatised, see section 7.7.

13.1.2 Routine Calibration

Calibration is guaranteed as in the specification. The Manufacturers provide a re-calibration service, as do most of their agents overseas. Where owners wish to carry out re-calibration themselves, this should only be done by skilled personnel with access to precision equipment working in conjunction with the Service Guide.

13.2 Hard Reset

If the multimeter gets into a condition in which normal operation is not possible, it can be returned to normal operation by reloading the Factory Default settings – see section 12.8.

However, if it "locks up" (i.e. will not respond to key presses), it can be put through a Hard Reset. A Hard Reset is performed by holding down both the **[Cancel]** and **[Stop]** keys together for five seconds. This will reset the multimeter but will not return the factory default settings. Note that if the multimeter is running off its internal batteries then a Hard Reset will cause the multi-meter to power down; to turn the multimeter back on simply press the **Operate** key.

13.3 Fuse Replacement

13.3.1 Current Range Fuses

The **mA/1A** socket is protected by a 1.6A (F) 1kV HRC fuse and the **10A** socket by a 10A (F) 1kV HRC fuse, accessed via the fuse door in the base of the case. To replace a fuse, proceed as follows:

1. Disconnect the instrument from all voltage sources.
2. Remove the screw retaining the cover.
3. Replace the fuse with one of identical specification and size.
4. Refit the fuse door securely.



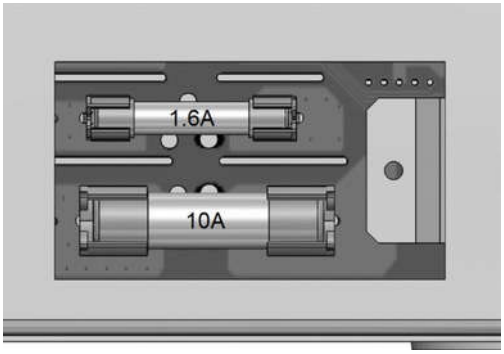

13.3.2 Internal AC power fuse

The AC supply transformer on the Main PCB is protected against an internal fault by a non-resettable thermal fuse. To avoid the thermal fuse being accidentally tripped by connecting to a 230V supply when the instrument set for 115V operation, a standard 500mA (T) 250V fuse is fitted in position FS3 on the main PCB. Should this fuse need replacing, following such an event, remove the case upper and replace the fuse following the instructions and diagrams of Section 3.

13.4 Cleaning

If the meter requires cleaning use a cloth that is only lightly dampened with water or a mild detergent. Polish the display window with a soft dry cloth.

WARNING! TO AVOID ELECTRIC SHOCK, OR DAMAGE TO THE METER, NEVER ALLOW WATER TO GET INSIDE THE CASE. TO AVOID DAMAGE TO THE CASE OR DISPLAY WINDOW NEVER CLEAN WITH SOLVENTS.

13.5 Firmware Updates

The instrument firmware can be updated in the field through the USB port. It requires a PC software utility provided by the manufacturer, and uses a HID driver that will already be installed on the PC. If that is the only USB functionality required, download the package containing the firmware update together with the PC utility from the manufacturer, and follow the instructions included.

Note: The latest revisions of this manual, device drivers and software tools can be downloaded from: http://www.aimtti.com/support.

14 Remote Operation

The 1908P model can be remotely controlled via its RS232, USB, GPIB or LAN interfaces. The 1908 (non 'P') can only be controlled via USB. In order to remotely control the instrument via RS232, GPIB or LAN, mains power must be applied. USB however can function with or without mains power applied as it is host powered. As such the USB interface can be used when powered from the batteries.

The GPIB interface provides full facilities as described in IEEE Std. 488 parts 1 and 2.

The RS232 interface communicates directly with a standard COM port.

The USB interface enumerates as a Communications Class device and interacts with application software through a standard virtual COM port device driver on the PC. The instrument firmware can be updated in the field via the USB port; see the 'Maintenance' section for details.

The LAN interface is designed to meet LXI (Lan eXtensions for Instrumentation) version 1.4 LXI Core 2011. Remote control using the LAN interface is possible using the TCP/IP Sockets protocol. The instrument also contains a basic Web server which provides information on the unit and allows it to be configured from a web browser. Simple command line control from the browser is also possible.

14.1 **GPIB Interface**

The standard GPIB interface 24-way connector is located on the instrument rear panel. The pin connections are as specified in IEEE Std. 488.1-1987 and the instrument complies with both IEEE Std. 488.1-1987 and IEEE Std. 488.2-1987.

It provides full talker, listener, service request, serial poll and parallel poll capabilities. There are no device trigger or controller capabilities. The IEEE Std.488.1 interface subsets provided are:

SH1, AH1, T6, L4, SR1, RL2, PP1, DC1, DT0, C0, E2.

The GPIB address of the unit is set from the front panel: select the **{Utilities}** menu then **{Addr}**. The present GPIB address is displayed. If it needs to be changed, use the Navigator keys to set the desired address and then press **[OK]**.

The interface will operate with any commercial GPIB interface card, using the device drivers and support software provided by the manufacturer of that card.

14.2 **RS232 Interface**

The 9-way D-type serial interface connector is located on the instrument rear panel. It should be connected to a standard PC port preferably using a fully wired 9-way 1:1 male-female cable without any cross-over connections. Alternatively, a 3-way cable can be used, connecting only pins 2, 3 and 5 to the PC, but with links made in the connector at the PC end between pins 1, 4 and 6 and between pins 7 and 8, as shown in the diagram:

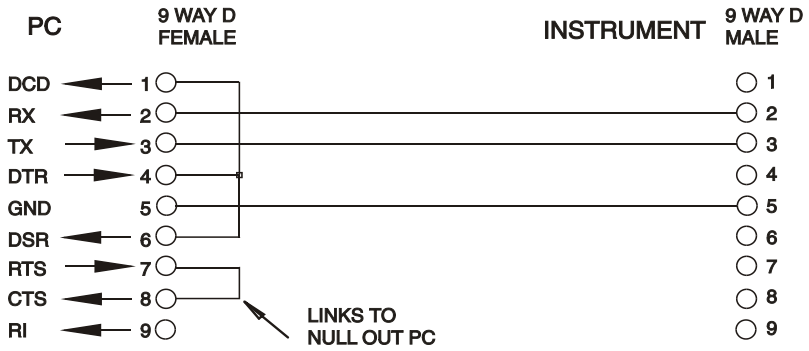

Most commercial cables provide these connections.

In addition to the transmit and receive data lines, the instrument passively asserts pins 1 (DCD) and 6 (DSR), actively drives pin 8 (CTS) and monitors pin 4 (DTR) from the PC. This allows the use of a fully wired 9-way cable.

The Baud Rate for this instrument is fixed at 9600; the other parameters are 8 data bits, no parity and one stop bit. Flow control uses the XON/XOFF protocol, but because of the low volume of data associated with this instrument it is very unlikely that flow control will actually be invoked.

14.3 USB Interface and Device Driver Installation

The instrument firmware can be updated in the field through the USB port. This does **not** need the driver described here. It requires a PC software utility provided by the manufacturer, and uses a HID driver that will already be installed on the PC. If that is the only USB functionality required, download the package containing the firmware update together with the PC utility from the manufacturer, and follow the instructions included.

Using the USB interface for remote control requires a Communications Device Class driver on the PC to provide a virtual COM port instance. In Windows a suitable driver is provided by Microsoft, but it is not installed by default. The data (.INF) file to control the installation is provided on the Product Documentation CD delivered with the unit; however the same driver is also used by many other instruments from this manufacturer and may already be known to the PC.

To install the driver for the first time, first switch the unit on, and then connect the USB port to the PC. The Windows plug and play functions should automatically recognise the attachment of new hardware to the USB interface and (possibly after searching the internet for some time) prompt for the location of a suitable driver. Follow the Windows prompts and point to the CD, then the sub-directory for this product, and then to the USB Driver sub-directory below that. The file is named USB_ARM_VCP_xxx**.**INF, where xxx is a version number. (A readme.pdf file will also be found in that directory if further assistance is needed.)

In some cases Windows will not complete this procedure (especially recent versions which search the internet first, looking for the unique Vendor ID and Product ID), in which case the instrument will show in Device Manager as “not working properly”. If this happens, select this device, right click and choose “update driver software...” and then “browse this computer for driver software...” and then locate the .INF file on the CD as described above.

Once Windows has installed the device driver it will assign a COM port number to this particular unit. This number will depend on previous COM port assignments on this PC, and it may be necessary to use Device Manager to discover it. Each instrument has a unique USB identifier which is remembered by the system, so it will receive the same COM port number whenever it is attached to the same PC (regardless of the physical interface socket used), even though the COM port will disappear while the instrument is disconnected or switched off. Other instruments will receive different COM port numbers.

Note that a different PC will not necessarily assign the same COM port number to a particular instrument (it depends on the history of installations), however Device Manager can be used to change the assignments given.

This virtual COM port can be driven by Windows applications (including a terminal emulator) in exactly the same way as any standard COM port, except that the Baud rate and other settings are unnecessary and are ignored. Some old applications might not function with COM port numbers 3 or 4, or above 9. In this case, use Device Manager to change the allocation given. Once it is installed, the driver will be maintained by Windows Update in the usual way.

14.4 LAN Interface

The LAN interface is designed to comply with the LXI standard version 1.4 LXI Core 2011 and contains the interfaces and protocols described below. For more information on LXI standards refer to www.lxistandard.org .

When powered up and attached to a network, the unit will by default attempt to obtain IP address and netmask settings via DHCP, or, if DHCP times out (after 30 seconds), via Auto-IP. In the very unlikely event that an Auto-IP address cannot be found a static IP address is assigned; the default is 192.168.0.100, but this can be changed on the web page. Connecting via a router is recommended as this is significantly quicker to assign an IP address; connecting directly to a PC will only begin to assign an Auto-IP address after the 30 second DHCP timeout.

Since it is possible to misconfigure the LAN interface, making it impossible to communicate with the instrument over LAN, a LAN Configuration Initialise (LCI) mechanism is provided via a push switch (marked **LAN reset)** accessible through a small hole in the rear panel. This restores the default configuration with DHCP enabled, so the unit will then follow the sequence described in the previous paragraph. Note that resetting the LAN interface removes any password protection.

The progress of establishing a LAN connection can be viewed by interpreting the LAN indicator shown on the display.

No LAN	If the unit cannot detect any connection to a LAN, e.g. the cable is unplugged. The **{LAN}** indicator is not displayed.
Configuring	The unit has detected a LAN connection but is not yet configured, e.g. is waiting for DHCP. The **{LAN}** indicator is displayed.
LAN OK	The LAN connection is now configured and the unit can communicate. The **{LAN}** indicator is displayed.
LAN FAULT	The unit has detected a problem with LAN connection, e.g. Its IP address is in use by another device. Communication is not possible The **{LAN}** indicator is not displayed.

14.4.1 LAN IP Address and Hostname

To communicate with the instrument through the LAN interface, the IP address (which was allocated during the connection procedure described above) must be known. Once connected and correctly configured the address can be obtained from the DHCP server, or by using the LXI Discovery Tool described below.

14.4.2 mDNS and DNS-SD Support

The instrument supports these multicast name resolution protocols, which allow a meaningful host name to be assigned to the unit without needing an entry in the database of a central nameserver. The desired hostname can be entered on the webpage (which will have to be accessed by IP address the first time); spaces are not allowed. The name then appears in the **.**local domain (e.g. my1908.local), if the accessing device is configured to support the protocol (which is the case with most modern PCs). The default name is t followed by the serial number.

14.4.3 ICMP Ping Server

The unit contains an ICMP server allowing the instrument to be ‘pinged’ using its IP address as a basic communication check, or by its host name if name resolution is working.

14.4.4 Web Server and Configuration Password Protection

The unit contains a basic web server. This provides information on the instrument and allows it to be configured. The Configure and Instrument Control pages can be password protected to deter unauthorised changes to the remote operation configuration; the default configuration is ‘no password’. The Configure page itself explains how to set the password. The password can be up to 15 characters long; note that the **User Name should be left blank**. The password and hostname will, however, be reset to the default (no password) if the rear panel **LAN reset** switch is used to reset all the LAN parameters to their factory default.

14.4.5 LAN Identify

The instrument's main web page has an 'Identify' function which allows the user to send a command to the instrument which causes the **{LAN}** indicator to flash until the command is cancelled.

14.4.6 LXI Discovery Tool

This tool can be used to display the IP addresses and other associated information of all connected devices that comply with the VXI-11 discovery protocol. It is a Windows PC application, which is provided on the supplied CD-ROM,that can be installed and run on the controlling PC, with the unit either connected directly to the PC network connector or via a router. Double clicking on any entry in the list of discovered devices will open the PC's web browser and display the Home page of that device. For a later version of the tool that supports discovery by both VXI-11 and mDNS visit www.lxistandard.org . There are also tools for LAN discovery included as part of the National Instruments Measurement and Automation Explorer package and the Agilent Vee application.

14.4.7 VXI-11 Discovery Protocol

The instrument has very limited support of VXI-11 which is sufficient for the discovery protocol and no more.

It implements a Sun RPC Port-mapper on TCP port 111 and UDP port 111 as defined in RFC1183. The calls supported are:

NULL, GET PORT and DUMP.

On TCP port 1024 a very simple VXI-11 protocol is implemented, sufficient only for instrument discovery. This implements the following calls:

CREATE LINK, DEVICE_WRITE, DEVICE_READ and DESTROY_LINK.

Once a link has been created anything written to the device is ignored and any attempt to read from the device returns the same identification string as the *IDN? query.

14.4.8 VISA Resource Name

Because of the limited support for VXI-11 (Discovery Protocol only), the instrument must be referred to by its raw socket information when used with software packages which communicate using a VISA resource name. For example, an instrument at IP address 192.168.0.100 would normally have a VISA resource name of "TCPIP0::192.168.0.100::inst0::INSTR" but for this instrument the name must be modified to read "TCPIP0::192.168.0.100::9221::SOCKET" where 9221 is the TCP port used by this instrument for control and monitoring, see below.

14.4.9 XML Identification Document URL

As required by the LXI standard, the instrument provides an XML identification document that can be queried via a GET at “http://IPaddress:80/lxi/identification” that conforms to the LXI XSD Schema (available at http://www.lxistandard.org/InstrumentIdentification/1.0) and the W3C XML Schema Standards (http://www.w3.org/XML/Schema). This document describes the instrument. The hostname can be used instead of the IP address if name resolution is working.

14.4.10 TCP Sockets

The instrument uses 1 socket on TCP port 9221 for instrument control and monitoring. Text commands are sent to this port as defined in ‘Remote Commands’ and any replies are returned via the same port. Any command string must contain one or more complete commands. Multiple commands may be separated with either semicolons “;” or line feeds. No final terminator is required, since the TCP frame implies a terminator, but one may be sent if desired.

---

15 Status Reporting

The standard status and error reporting model described in IEEE Std. 488.2 was designed for the GPIB interface and contains some features intended for use with the Service Request and Parallel Poll hardware capabilities of that interface, and to accommodate its semi-duplex operation. Although those facilities are of little use with other interfaces, this instrument makes the full set of capabilities available to all of the interfaces. All the remote interfaces share the same set of status and error registers.

The full set of error and status registers and the individual bits they contain is shown in the Status Model Diagram and described in detail below, but in brief the status is maintained using three primary registers the Input Trip Register, the Standard Event Status Register and the Execution

Error register. A summary is reported in the Status Byte Register, as selected by two masking registers – the Input Trip Enable register and the Standard Event Status Enable Register. Two further mask registers, the Service Request Enable register and the Parallel Poll Response Enable register, control operation of the GPIB hardware Service Request and Parallel Poll (and the associated **ist** message) respectively. It is recommended that, when controlling the unit through any interface other than GPIB, the controller program should simply read the primary status registers directly.

The instrument specific Input Trip Registers record events related to the electrical function of the multimeter and the user inputs applied.

The Standard Event Status Register, supported by the Execution Error and Query Error registers, records events concerned with command parsing and execution, and the flow of commands, queries and responses across the interface. These are mainly of use during software development, as a production test procedure should never generate any of these errors.

15.1 Input Trip Registers (ITR & ITE).

The Input Trip Register reports electrical conditions that have arisen during the operation of the multimeter. By its nature it is common to all interfaces. It reports events that have resulted in the unit unexpectedly disabling the internal current source and reverting the primary measurement to Vdc.

The Input Trip Register has a summary bit in the Status Byte Register, with an associated Enable Register to determine which, if any, bits contribute to that summary. All these registers are bit fields, where each bit is independent (so more than one may be set simultaneously) and has the significance detailed below.

15.1.1 Input Trip Register (ITR)

Bits 7-1 *Not used, permanently 0.*

Bit 0 **Over Voltage Protect:** Set when an overvoltage is applied between the **HI** and **LO** terminals in the following modes – Ohms (4 wire and 2 wire), Diode, Continuity, Capacitance and Temperature measurement.

The bits in the Input Trip register are set when the event they report occurs, and then remain set until read by the ITR? query. After the Response Message is sent any bits reporting conditions that no longer apply will be cleared; any bit reporting a condition that remains true will remain set.

The Input Trip Enable Register provides the mask between the Input Trip Register and the Status Byte Register. If any bit becomes ‘1’ in both registers, then the INTR bit (bit 1) will be set in the Status Byte Register. This enable register is set by the ITE <NRF> command to a value 0 - 255, and read back by the ITE? query (which will always return the value last set by the controller). On power-up the ITE register is set to 0 and ITR is cleared (but bits it contains may be set after initialisation in the unusual case of any of the conditions reported being true).

15.2 Standard Event Status Registers (ESR and ESE)

The Standard Event Status Register is defined by the IEEE Std. 488.2 GPIB standard. It is a bit field, where each bit is independent and has the following significance:

Bit 7 **Power On.** Set once the instrument is fully initialised and operating after either power up from the application of mains, or when the **[Operate]** key is pressed in standby. It is also set when first powered up on batteries although this is only useful on USB as all other remote interfaces are not available under battery power.

Bits 6, 3 & 1: *Not used, permanently 0.*

Bit 5 **Command Error.** Set when a syntax error is detected in a command or parameter. The parser is reset and parsing continues at the next byte in the input stream.

Bit 4 **Execution Error.** Set when a non-zero value is written to the Execution Error register, if a syntactically correct command cannot be executed for any reason.

Bit 2 **Query Error.** Set when a query error occurs, because the controller has not issued commands and read response messages in the correct sequence.

Bit 0 **Operation Complete.** Set in response to the ‘*OPC’ command.

The Standard Event Status Register is read and cleared by the *ESR? query, which returns a decimal number corresponding to the contents. On power-up or initialisation after standby it is set to 128, to report the power-on bit.

The Standard Event Status Enable Register provides a mask between the Event Status Register and the Status Byte Register. If any bit becomes '1' in both registers, then the ESB bit will be set in the Status Byte Register. This enable register is set by the *ESE <NRF> command to a value 0 - 255, and read back by the *ESE? query (which will always return the value last set by the controller). On power-up it is set to 0.

15.3 Execution Error Register (EER)

This instrument specific register contains a number representing the last command processing error encountered over this interface. The error numbers have the following meaning:

0 No error has occurred since this register was last read.

101 **Numeric Error:** the parameter value sent was outside the permitted range for the command in the present circumstances.

102 **Mode Error:** the secondary display measurement requested is not compatible with the primary measurement.

103 **Function Error:** the function (modifier) requested is not compatible with the primary measurement.

The Execution Error Register is read and cleared using the 'EER?' command. On power up this register is set to 0 for all interface instances.

There is no corresponding mask register: if any of these errors occurs, then bit 4 of the Standard Event Status Register will be set. This bit can be masked from any further consequences by clearing bit 4 of the Standard Event Status Enable Register.

15.4 Status Byte Register (STB) and GPIB Service Request Enable Register (SRE)

These two registers are implemented as required by the IEEE Std. 488.2.
Any bits set in the Status Byte Register which correspond to bits set in the Service Request Enable Register will cause the RQS/MSS bit to be set in the Status Byte Register, thus generating a Service Request on the bus.

The Status Byte Register is read either by the *STB? query, which will return MSS in bit 6, or by a Serial Poll which will return RQS in bit 6. The Service Request Enable register is set by the *SRE <NRF> command and read by the *SRE? query.

Bits 7, 3, 2 and 0: *Not used, permanently 0.*

Bit 6 **MSS/RQS**. This bit (as defined by IEEE Std. 488.2) contains alternatively the Master Status Summary message returned in response to the *STB? query, or the Requesting Service message returned in response to a Serial Poll.
The RQS message is cleared when polled, but the MSS bit remains set for as long as the condition is true.

Bit 5 **ESB.** The **Event Status** Bit. This bit is set if any bits set in the Standard Event Status Register correspond to bits set in the Standard Event Status Enable Register.

Bit 4 **MAV.** The **Message Available** Bit. This will be set when the instrument has a response message formatted and ready to send to the controller.
The bit will be cleared after the Response Message Terminator has been sent.

Bit 1 **INTR.** The **Input Trip** Bit. This bit is set if any bits set in the Input Trip Register correspond to bits set in the Input Trip Enable Register.

15.5 **GPIB Parallel Poll (PRE)**

Complete Parallel Poll capabilities are offered by this instrument as defined in IEEE Std. 488.1. The Parallel Poll Enable Register (which is set by the *PRE <NRF> command and read by the *PRE? query) specifies which bits in the Status Byte Register are to be used to form the **ist** local message. If any bit is '1' in both the STB and the PRE then **ist** is '1', otherwise it is '0'. The state of the **ist** message can also be read directly by the *IST? query.

The physical layer protocol of the Parallel Poll (determining which data line is to be driven and its logic sense) is configured by the PPC and PPE commands and released by the PPU and PPD commands in the manner defined by the standard. The instrument implements passive pull-up on the DIO lines during Parallel Poll.

15.6 **Query Error Register - GPIB IEEE Std. 488.2 Error Handling**

These errors are much more likely to occur on the semi-duplex GPIB interface, which requires the instrument to hold a response until addressed to talk by the controller. All the other interfaces provide full duplex communication, with buffering in the physical layer which will usually hold a response from the instrument until the controlling software reads it; there is no equivalent of the GPIB state 'addressed to talk', so the instrument is not aware of the actions of the controller

The IEEE 488.2 UNTERMINATED error arises if the instrument is addressed to talk and has nothing to say, because the response formatter is inactive and the input queue is empty. This will cause the Query Error bit to be set in the Standard Event Status Register, a value of 3 to be placed in the Query Error Register and the parser to be reset.

The IEEE 488.2 DEADLOCK error arises if the response formatter is waiting to send a response message and the input queue becomes full. This will cause the Query Error bit to be set in the Standard Event Status Register, a value of 2 to be placed in the Query Error Register and the response formatter to be reset, discarding the waiting response message. The parser will then start parsing the next <PROGRAM MESSAGE UNIT> from the input queue.

The IEEE 488.2 INTERRUPTED error arises if the response formatter is waiting to send a response message and a <PROGRAM MESSAGE TERMINATOR> has been read by the parser, or the input queue contains more than one END message. This will cause the Query Error bit to be set in the Standard Event Status Register, a value of 1 to be placed in the Query Error Register and the response formatter to be reset, discarding the waiting response message. The parser will then start parsing the next <PROGRAM MESSAGE UNIT> from the input queue.

15.7 **Power on Settings**

The following instrument status values are set at power on:

ITE	Input Trip Enable Register	= 0
EER	Execution Error Register	= 0
ESR	Standard Event Status Register	= 128 (pon bit set)
QER	Query Error Register †	= 0
ESE	Standard Event Status Enable Register †	= 0
STB	Status Byte Register	= 0
SRE	Service Request Enable Register †	= 0
PRE	Parallel Poll Response Enable Register †	= 0

† *Registers marked thus are normally only used through the GPIB interface.*

The Input Trip (ITR) Register will report any conditions which presently apply.

The instrument will be in local state with the keyboard active. The instrument parameters at power on are the same as at the last switch off.

15.8 **1908 Status Model**

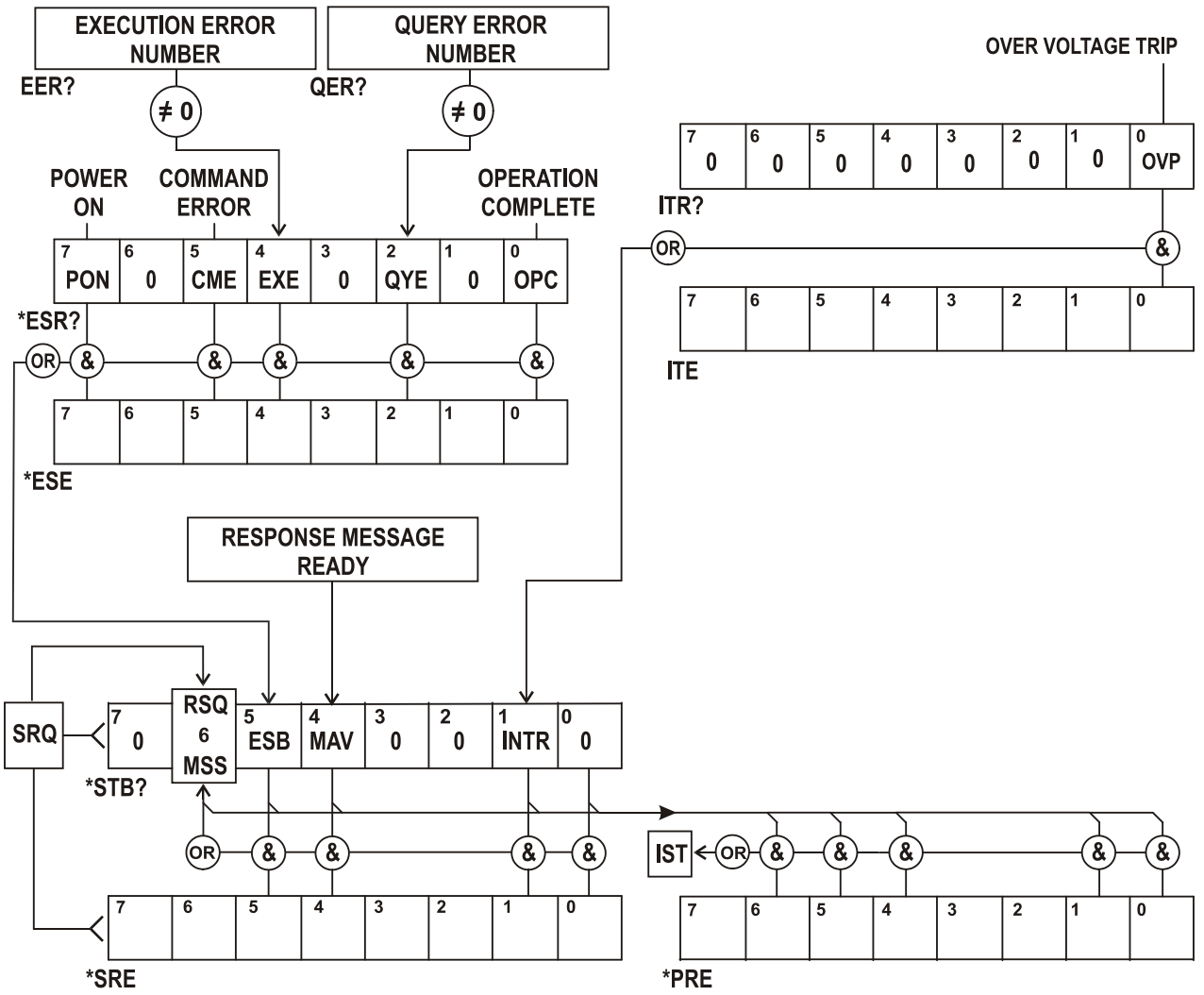

15.9 **Register Summary**

Set	Query	Name
†	ITR?	Input Trip Register
ITE	ITE?	Input Trip Enable Register
†	EER?	Execution Error Register
†	QER?	Query Error Register
†	*ESR?	Standard Event Status Register
*ESE	*ESE?	Standard Event Status Enable Register
	*STB?	Status Byte Register
*SRE	*SRE?	Status Byte Enable Register
*PRE	*PRE?	Parallel Poll Response Enable Register

† These registers are cleared after being queried, or by the *CLS command.

16 Remote Commands

16.1 General

16.1.1 Remote and Local Operation

At power-on the instrument will be in the local state, with normal keyboard operation possible. All remote interfaces are active and listening for a remote command. When any command is received from any interface the instrument will enter the remote state. In this state the keyboard is locked out, the display switches to the home screen, with the REM indicator displayed. The instrument may be returned to the local state by pressing **[Cancel]** (Local); however the remote state will be immediately re-entered if the instrument is addressed again or receives another command from any interface. It is the responsibility of the user to avoid any conflict if parameters are changed from the front panel while in the Local state.

16.1.2 Remote Command Handling

Each remote control interface has a separate input queue which is filled, under interrupt, in a manner transparent to all other instrument operations. The RS232 interface implements flow control by sending XOFF when the queue contains approximately 200 characters, and then XON when about 100 free spaces become available. All the other interfaces have standard automatic flow control mechanisms built into their physical layer communication protocol.

Commands are taken from the input queues by the parser as available. Commands and queries from each queue are executed in order, but the order of execution of commands from different interfaces is not defined and should not be relied upon. The parser will not start a new command until any previous command or query is complete. Responses are sent to the interface which issued the query. There is no internal output queue, so on the GPIB interface the response formatter will wait, indefinitely if necessary, until the complete response message has been read by the controller, before the parser is allowed to start the next command in the input queue. On all other interfaces the response message is immediately sent into buffers in the physical layer.

16.1.3 Remote Command Formats

Commands are sent as <PROGRAM MESSAGES> by the controller, each consisting of zero or more <PROGRAM MESSAGE UNIT> elements, separated (if there is more than one such element) by <PROGRAM MESSAGE UNIT SEPARATOR> elements, and finally a <PROGRAM MESSAGE TERMINATOR>.

The <PROGRAM MESSAGE UNIT SEPARATOR> is the semi-colon character ';' (3BH).

The <PROGRAM MESSAGE TERMINATOR>, which separates or terminates <PROGRAM MESSAGES>, is the new line character (0AH), but in the case of the GPIB interface the hardware END message may also be used, either with the last character of the message or with the new line.

A <PROGRAM MESSAGE UNIT> is any of the commands in the remote commands list, which must be sent in full as specified. A command must be separated from any parameters by <WHITE SPACE> (which is defined as the character codes 00H to 20H inclusive, excluding the new line character 0AH). No <WHITE SPACE> is permitted within any command identifier or parameter, but any other additional <WHITE SPACE> is ignored. Note that the Backspace character (07H) is treated as <WHITE SPACE>, so it cannot be used to delete incorrect characters, and will not hide the error.

The high bit of all characters is ignored and all commands are case insensitive. Commands that require a numeric parameter accept the free form <NRF> format; text parameters must be sent as Character Program Data <CPD> as specified.

<NRF> numbers must be in basic units, may have a decimal point and fractional part, and can include an exponent part if helpful. They are rounded to the precision supported, so 12, 12.00, 1.2e1, 120e-1 are all accepted as the number 12.

16.1.4 Command Timing

There are no dependent parameters, coupled parameters, overlapping commands, expression program data elements or compound command program headers.

All commands are separate and sequential, and are executed when parsed and immediately considered complete. To provide useful functionality, the Operation Complete bit (bit 0) in the Standard Event Status Register is only ever set by the *OPC command. Either the *OPC command or the *OPC? query can be used for device synchronisation due to the sequential nature of remote operations.

16.1.5 Response Formats

Responses from the instrument to the controller are sent as <RESPONSE MESSAGES>, which consist of one <RESPONSE MESSAGE UNIT> followed by a <RESPONSE MESSAGE TERMINATOR>, which is the carriage return character (0DH) followed by the new line character (0AH) with, in the case of GPIB only, the END message NL^END. This is shown as <RMT> in the descriptions below.

Each query produces a specific <RESPONSE MESSAGE> which is described in the entry for the query command in the remote commands list below. Most responses consist of a keyword followed by either text or a number in one of the following formats:

<NR1> An integer without a decimal point or a unit.
<NR2> A fixed point number with a fractional part but no exponent part.
<NR3> A floating point number with both a fractional part and an exponent part.
<CRD> Character Response Data, consisting of the text characters listed.
<ASCII data> A combination of numbers and text characters.

When helpful, numbers are followed by a units indication (which depends on the present measurement mode) to provide confirmation. The units used are: V DC, V AC, V AC+DC, A DC, A AC, A AC+DC, Hz, Ohms, F (Farads), V, dB, W, VA, %, F (Fahrenheit) and C (Celsius).

16.2 **Command List**

This section lists all the commands and queries implemented in this instrument. All numeric parameters are shown as <NRF> and may be sent as <NR1>, <NR2> or <NR3> as described above.

16.2.1 General Commands

READ? Returns the next reading from the main display immediately after the command has been parsed.

The syntax of the response is: <ASCII data><RMT>

Where <ASCII data> is a character string divided into 11-character plus up to 8-character fields. The first field is the measurement value and consists of the following:

Digit 1: space (for positive values) or a minus sign.

Digits 2 to 8: a 6 digit number plus decimal point in the format of the range selected for the measurement.

Digits 9 to 11: the exponent in the form e00, e-3, e03, etc., i.e. engineering units.

Any overload reading (i.e. > 120,000 counts) is returned as 'OVLOAD'. A calculation overflow (relevant to some function results) is returned as 'OVFLOW'.

The second field is the unit indication and will be one of the following:

V DC	V AC	V AC+DC
A DC	A AC	A AC+DC
Hz	Ohms	F (Farads)
V (Diode test)	C (Celsius)	F (Fahrenheit)
dB	W	VA
%		

Examples:

101.234e-3 V DC	(101.234mV)
-10.0012e00 V DC	(-10.0012V)
00.1234e00 V AC+DC	(0.1234V)
100.01e03 Hz	(100.01kHz)
01.010e-6 F	(1.01µF)

READ2? Returns the readings from the secondary display immediately after the command has been parsed. Then syntax is as for READ? Described above. If the secondary display is currently showing the range of the main (primary) display the response will be RANGE.

MODE? Returns the state of the main display, including the mode, range and whether the range is locked (manual) or autoranging.

The syntax of the response is: <ASCII data>,<ASCII data>,<ASCII data>,<RMT>

The response includes three ASCII data fields.

The first field contains the primary display Mode which includes:

VDC, VAC, V AC+DC, IDC, IAC, IAC+DC, OHMS, DIODE, CONT, FREQ, CAP, TEMPC, TEMPF.

The second field contains the range e.g. 1000mV.
The third and final field contains the range selection state either 'MAN' for manual range, or 'AUTO' for autoranging.

Each of the ASCII fields is separated by a comma.

MODE2? Returns the state of the secondary display, including the mode, range and whether the range is locked (manual) or autoranging.

The syntax of the response is: <ASCII data>,<ASCII data>,<ASCII data>,<RMT>

The response includes three ASCII data fields.

The first field contains the secondary display Mode which includes:

VDC, VAC, IDC, IAC, FREQ.

The second field contains the range e.g. 1000mV.

The third and final field contains the range selection state either 'MAN' for manual range, or 'AUTO' for autoranging. Manual range selection is only available when selecting the 10A range.

Each of the ASCII fields is separated by a comma.

FILTON Enables the 50/60Hz hardware filter. This filter only affects the Vdc and Ohms measurement modes.

FILTOFF Disables the 50/60Hz hardware filter. This filter only affects the Vdc and Ohms measurement modes.

SPEED <CPD> Sets the standard sampling speed of the instrument to either 4SPS or 20SPS.

The following <CPD> can be used to set the sampling speed:

<SLOW> sets the sampling speed to 4SPS.

<FAST> sets the sampling speed to 20SPS.

RTD <CPD> Sets the RTD temperature measurement connection to either 2 wire or 4 wire. The following <CPD> can be used to set the connection:

<2W> sets the measurement connection to 2 wire.

<4W> sets the measurement connection to 4 wire.

16.2.2 Main Display Commands

VDC <CPD> Sets the main display to dc Volts and optionally sets the range; if no range is specified the display defaults to autorange.

The following <CPD> can be used to set the range:

<100MV>,<1000MV>,<10V>,<100V>,<1000V>

VAC <CPD> Sets the main display to ac Volts and optionally sets the range; if no range is specified the display defaults to autorange.

The following <CPD> can be used to set the range:

<100MV>,<1000MV>,<10V>,<100V>,<750V>

VACDC <CPD> Sets the main display to ac+dc Volts and optionally sets the range; if no range is specified the display defaults to autorange.

The following <CPD> can be used to set the range:

<100MV>,<1000MV>,<10V>,<100V>,<750V>

IDC <CPD> Sets the main display to dc Amps and optionally sets the range; if no range is specified the display defaults to mA autorange.

The following <CPD> can be used to set the range:

<1MA>,<100MA>,<1000MA>,<10A>

IAC <CPD>	Sets the main display to ac Amps and optionally sets the range; if no range is specified the display defaults to mA autorange. The following <CPD> can be used to set the range: <1MA>,<100MA>,<1000MA>,<10A>
IACDC <CPD>	Sets the main display to ac+dc Amps and optionally sets the range; if no range is specified the display defaults to mA autorange. The following <CPD> can be used to set the range: <1MA>,<100MA>,<1000MA>,<10A>
OHMS <CPD>	Sets the main display to two wire Ohms and optionally sets the range; if no range is specified the display defaults to autorange. The following <CPD> can be used to set the range: <100>,<1000>,<10K>,<100K>,<1000K>,<10M>
2WOHMS <CPD>	Sets the main display to two wire Ohms and optionally sets the range; if no range is specified the display defaults to autorange. The following <CPD> can be used to set the range: <100>,<1000>,<10K>,<100K>,<1000K>,<10M>
4WOHMS <CPD>	Sets the main display to four wire Ohms and optionally sets the range; if no range is specified the display defaults to autorange. The following <CPD> can be used to set the range: <100>,<1000>,<10K>,<100K>,<1000K>,<10M>
CONT	Sets the main display to continuity test.
DIODE	Sets the main display to diode test.
TEMPC <CPD>	Sets the main display to Celsius temperature measurement and optionally sets the RTD probe type; if no probe is specified the existing probe is used. The following <CPD> can be used to set the RTD probe type: <PT100>,<PT1000>
TEMPF <CPD>	Sets the main display to Fahrenheit temperature measurement and optionally sets the RTD probe type; if no probe is specified the existing probe is used. The following <CPD> can be used to set the RTD probe type: <PT100>,<PT1000>
CAP <CPD>	Sets the main display to Capacitance and optionally sets the range; if no range is specified the display defaults to autorange. The following <CPD> can be used to set the range: <10NF>,<100NF>,<1UF>,<10UF>,<100UF>
FREQ <CPD>	Sets the main display to Frequency and optionally sets the range; if no range is specified the display defaults to autorange. The following <CPD> can be used to set the range: <100HZ>,<1000HZ>,<10KHZ>,<100KHZ>
AUTO	Sets the main display to autorange, except for Continuity or Diode check.
MAN	Sets the main display to manual, i.e. the current range is ‘locked’.

16.2.3 Dual Measurement Mode Commands

VDC2	Sets the secondary display to dc Volts (autoranging).
VAC2	Sets the secondary display to ac Volts (autoranging).
IDC2 <CPD>	Sets the secondary display to dc Amps and optionally selects mA (autoranging) or the 10A range; if no range is specified the existing range is used. The following <CPD> can be used: <1MA>,<100MA>,<1000MA>,<10A> If the main display is set to ac Amps the secondary range will be the same as the main display range.
IAC2 <CPD>	Sets the secondary display to ac Amps and optionally selects mA (autoranging) or the 10A range; if no range is specified the existing range is used. The following <CPD> can be used: <1MA>,<100MA>,<1000MA>,<10A> If the main display is set to dc Amps the secondary range will be the same as the main display range.
FREQ2	Sets the secondary display to frequency (autoranging). VAC or IAC must first have been selected in the main display.

16.2.4 First Level Modifier Commands

NULL	Nulls the main display and sets it to manual, i.e. the current range is held. The un-nulled reading will be shown in the secondary display if the meter is not in dual measurement mode, except for capacitance.
NULLOFF	Cancels Null operation.
HOLD	Holds the value in the main display. The normal, updated, reading will be shown in the secondary display if the meter is not in dual measurement mode, except for capacitance.
HOLD OFF	Cancels Hold mode.
DB <CPD>	Sets the main display to show the dB value of the Vac measurement (which must have first been selected in the main display) and optionally sets the reference impedance; if no impedance is specified the existing value is used. The following <CPD> can be used to set the impedance: <50>,<75>,<93>,<110>,<124>,<125>,<135>,<150>,<250>,<300>,<500>,<600>,<800>,<900>,<1000>,<1200>,<8000>.
DBOFF	Cancels DB mode.

16.2.5 Second Level Modifier Commands

DELTA <NRF>	Selects the Delta % function and optionally sets the reference value; if no reference value is specified the existing value is used. The percentage deviation shows in the secondary display.
DELTA?	Returns the Delta % value. The syntax of the response is: <ASCII data><RMT> Where <ASCII data> is a character string divided into two fields (value followed by %) exactly as for the standard READ? Response; see that command section for details. If Delta% is greater than 999.99% the response value will be <OVFLOW>; if the Delta% function is not running the response value will be zero.
LIMITS <NRF>,<NRF>	Selects the Limits function and optionally sets the limits (LO, HI); if no reference is specified the existing value is used. PASS, LO or HI is shown in the secondary display.
LIMITS?	Returns the result of the latest Limits comparison. The syntax of the response is: <ASCII data><RMT> Where <ASCII data> is either PASS, LOW, HIGH, or OFF. PASS indicates that the reading was between or equal to one (or both) of the limits. LOW indicates that the reading was less than the LO set limit. HIGH indicates that the reading was above the HI set limit. OFF indicates that the Limits function was not running.
MMON	Starts the Min-Max recording mode, initially setting Min and Max to the same value. If Min-Max mode is already running, Min and Max are reset to the same value and recording starts again.
MM?	Returns the recorded Min and Max values. The syntax of the response is: <ASCII data for Min><ASCII data for Max><RMT> Where each <ASCII data> is a character string divided into two fields (value followed by units) exactly as for the standard READ? response; see that command section for details. The two character strings are separated by 2 spaces.
AXB <NRF>,<NRF>	Starts the Ax+b scaling function and optionally sets the A and b parameters; if A and b are not sent the existing values are used.
AXB?	Returns the result of the Ax+b scaling function. The syntax of the response is: <ASCII data><RMT> Where each <ASCII data> is a character string in the same format as the first (value) field of the standard READ? response; see that command section for details. If Ax+b is not running a zero value will be returned.
WATTS <NRF>	Selects the Watts function and optionally sets the reference impedance; if no impedance is specified the existing value is used. Vac or Vdc must have been specified in the main display; Watts shows in the secondary display.
WATTS?	Returns the result of the Watts calculation. The syntax of the response is: <ASCII data><RMT> Where <ASCII data> is a character string divided into two fields (value followed by units) exactly as for the standard READ? response; see that command section for details. If the Watts function is not running a zero value will be returned.

VA — Sets the VA function; Vac or Vdc must first have been selected in the main display and the meter must be connected for both voltage and current measurement. VA shows in the secondary display.

VA? — Returns the result of the VA calculation.

The syntax of the response is: <ASCII data><RMT>

Where <ASCII data> is a character string divided into two fields (value followed by units) exactly as for the standard READ? response; see that command section for details. If the VA function is not running a zero value will be returned.

CANCEL — Cancels the second level modifier currently running.

16.2.6 Data Logging Commands

LOGON <CPD> — Sets Data Logger running and optionally sets the internal logger interval timer; when no interval is specified the existing value is used.

The following <CPD> can be used:

<ALL> Sets the interval timer to the sample speed (SPS rate).

<OFF> Disables the interval timer but still allows manual triggering.

Alternatively a value between 0 and 9999 can be set.

Setting the interval to 0 disables the timer but still allows the logger to be triggered manually (from the keyboard) or remotely by external trigger or by remote command (TRIG), see below.

LOG? — Returns the contents of all valid locations in the data logger store, starting at location 001.

The syntax of the response is: <ASCII data><RMT>

Where <ASCII data> consists of up to 500 complete results, separated by commas, each result comprising three fields. The first filed is the reading number, consisting of 3 digits followed by three spaces. The following two fields contain the measurement value and measurement units respectively, in exactly the same format as the response to the standard READ? command, see that command section for details.

There is a delay in the response to the LOG? Command that varies with the total number of stored readings to be returned. The more stored readings the longer the delay. The delay is approximately 25ms per reading.

TRIG — With the data logger on, a reading will be stored each time the TRIG command is set. Since the remote command is OR'ed with the internal timer, either both can be run together or the internal timer can be disabled by setting the interval to 0 seconds.

LOGCOUNT — Returns the total number of stored readings.

The syntax of the response is: <NR1><RMT>

Where <nr1> is a value between 1 and 500.

CANCEL — Stops the logger running.

LOGCLEAR — Cancels the logger function, if it is running, and clears the results from the logger memory.

16.2.7 Common Commands

*IDN?	Returns the instrument identification. The response is in the form <NAME>, <model>, <serial>, <version><RMT> where <NAME> is the manufacturer's name, <model> is the instrument type, <serial> is the interface serial number and <version> is the revision level of the firmware installed.
*RST	Resets the functional parameters of the instrument to the default settings as listed in the Factory Default Settings section. Does not affect any remote interface settings.
*OPC	Sets the Operation Complete bit (bit 0) in the Standard Event Status Register. This will happen immediately the command is executed because of the sequential nature of all operations.
*OPC?	Query Operation Complete status. The response is always 1<RMT> and is available immediately the command is executed because all commands are sequential.
*WAI	Wait for Operation Complete true. This command does nothing because all operations are sequential.
*TST?	The DMM has no self-test capability and the response is always 0<RMT>.
*TRG	The DMM has no trigger capability. The command is ignored in this instrument.

16.2.8 Status Commands

*CLS	Clear Status. Clears all status indications, including the Status Byte. Does not clear any Enable Registers.
ITR?	Query the Input Trip Register. The response format is <NR1><RMT>. Clears any bits that no longer apply.
ITE <NRF>	Set the Input Trip Enable Register to <NRF>
ITE?	Returns the value in the value in the Input Status Enable Register. The response is: <NR1><RMT>.
EER?	Query and clear Execution Error Register. The response format is <NR1><RMT>.
QER?	Query and clear Query Error Register. The response format is <NR1><RMT>.
*STB?	Report the value of the Status Byte. The response is: <NR1><RMT>. Because there is no output queue, MAV can only be read by a GPIB serial poll, not by this query, as any previous message must have already been sent.
*SRE <NRF>	Sets the Service Request Enable Register to <NRF>
*SRE?	Report the value in the Service Request Enable Register. The response is <NR1><RMT>.
*PRE <NRF>	Set the Parallel Poll Enable Register to the value <NRF>.
*PRE?	Report the value in the Parallel Poll Enable Register. The response is <NR1><RMT>.
*IST?	Returns the state of the **ist** local message as defined by IEEE Std. 488.2. The response is 0<RMT> if the local message is false, or 1<RMT> if true.

16.2.9 Interface Management Commands

LOCAL	Go to local. Any subsequent command will restore the remote state.
ADDRESS?	Returns the GPIB bus Address. The response is <NR1><RMT>.
IPADDR?	Returns the present IP address of the LAN interface, provided it is connected. If it is not connected, the response will be the static IP if configured to always use that static IP, otherwise it will be 0.0.0.0 if waiting for DHCP or Auto-IP. The response is nnn.nnn.nnn.nnn<RMT>, where each nnn is 0 to 255.
NETMASK?	Returns the present netmask of the LAN interface, provided it is connected. The response is nnn.nnn.nnn.nnn<RMT>, where each nnn is 0 to 255.
NETCONFIG?	Returns the first means by which an IP address will be sought. The response is <CRD><RMT> where <CRD> is DHCP, AUTO or STATIC.

The following commands specify the parameters to be used by the LAN interface. **Note:** a power cycle is required after these commands are sent before the new settings are used (or returned in response to the queries listed above). The instrument does not attempt to check the validity of the IP address or netmask in way other than checking that each part fits in 8 bits. The rear panel **LAN reset** switch will override these commands and restore the defaults as described earlier.

NETCONFIG <CPD>	Specifies the first means by which an IP address will be sought. <CPD> must be one of DHCP, AUTO or STATIC.
IPADDR <QUAD>	Sets the potential static IP address of the LAN interface (as on the webpage). The parameter must be strictly a dotted quad for the IP address, with each address part an <NR1> in the range 0 to 255, (e.g. 192.168.1.101).
NETMASK <QUAD>	Sets the netmask to accompany the static IP address of the LAN interface. The parameter must be strictly a dotted quad for the netmask, with each part an <NR1> in the range 0 to 255, (e.g. 255.255.255.0).

17 Default Settings

As supplied, all conditions are set to defaults as in the listing below.

The meter is returned to default settings by the system reset command from the Utilities menu (see section 12.8) or by the ∗RST remote command.

Defaults:

Measurement parameter set to DC Volts, single measurement mode.

Auto-ranging mode set.

All first level modifiers cancelled, including Ohms Null.

All second level modifiers cancelled.

Ax + b factors set to A = 1.0000 and b = 00000

Limits set to 0.0000

Delta % reference set to 10000

dB reference impedance set to 600Ω

Watts reference impedance set to 50Ω

Data logger set to Off and timer set to 0000 seconds (logger store contents preserved)

External Trigger set to Off

Speed set to slow (4 readings/sec)

Measurement update symbol (star) set to On

Beep sound set to Off

Measurement filter set to On

RTD probe type set to PT100

RTD measurement mode set to 4 wire

Bus address set to 1 (not by ∗RST)

Baud rate 9600 (fixed)

N. B. Calibration constants are unaffected by a system reset.

18 Graphical Interface PC software

1908-PC Link is a PC application that can be found in the 1908 folder on the CD-ROM provided with this instrument. It is an application that provides a graphical user interface (GUI) for remote control of the multimeter from a PC. Connection can be via USB, RS232, or LAN (Ethernet).

The GUI provides remote access to the instrument using a point-and-click interface arranged similarly to the actual instrument. Measurement function can be selected for both the main and secondary displays, together with the measurement range. The display includes an analog bar-graph with minimum and maximum reading markers.

A logger function enables both measurements to be recorded at set time intervals and displayed in both graphical and tabular views. The logged data can be exported to a CSV file.

The application also provides a means of downloading the contents of the internal logger of the meter itself, and exporting it to a CSV file.

19 Specifications

ACCURACY

Accuracies apply for 1 year 19°C to 25°C. Temperature coefficient outside these limits is <0.1 x quoted range accuracy per °C.

DC Volts

Range	Accuracy	Resolution	Input Impedance
100mV	0.02% ± 3 dig. (after null)	1uV	10.11MΩ
1000mV	0.02% ± 3 dig.	10uV	10.11MΩ
10V	0.02% ± 3 dig.	100uV	10.0MΩ
100V	0.02% ± 3 dig.	1mV	10.1MΩ
1000V	0.02% ± 3 dig.	10mV	10.11MΩ

Typical Input Impedance:	10MΩ//<1000pF, except for Vdc plus Vac measurement when the 1MΩ ac attenuator is in parallel with the 10MΩ dc attenuator.
Maximum Input:	1kV DC or AC peak, any range.
NMR:	>60dB at 50/60Hz.
1kΩ Unbalanced CMR:	>90dB at DC/50Hz/60Hz.

Recommended maximum peak AC plus DC voltage while measuring DC voltage

Range	AC_{pk}+DC
100mV, 1000mV	1.8V
10V	18V

Range	AC_{pk}+DC
100V	180V
1000V	1000V

The table shows the maximum peak AC (45Hz-50kHz) plus DC voltage that can be applied without affecting the accuracy of the DC measurement due to overload clamping.

These values only apply when the DC component does not exceed the range maximum and the analogue 50/60Hz rejection filter is enabled.

AC Volts (True RMS)

Range	Accuracy			Resolution
	45Hz - 10kHz	10kHz - 30kHz	30kHz - 50kHz	
100mV	0.2% ± 150 dig	1.5% ± 200 dig.	-	1µV
1000mV	0.2% ± 100 dig	0.5% ± 100 dig	2% ± 200 dig	10µV
10V	0.2% ± 100 dig	0.5% ± 100 dig	2% ± 200 dig	100uV
100V	0.2% ± 100 dig	0.5% ± 100 dig	2% ± 200 dig	1mV
750V	0.2% ± 100 dig	0.5% ± 100 dig	2% ± 200 dig	10mV

Accuracy specifications apply for readings between 10,000 and 120,000 counts. Maximum crest factor = 3 at nominal range maximum.

Input Impedance:	1MΩ//<1000pF
Maximum Input:	750V rms, 1000V peak; any range.
1kΩ Unbalanced CMR:	>60dB at DC/50Hz/60Hz

(AC + DC) Voltage Accuracy

Total measurement error will not exceed the sum of the separate ac and dc accuracy specifications plus 10 display counts.

Resistance

2-wire or 4-wire measurement.

Range	Accuracy	Resolution
100Ω	0.05% ± 8 dig.	1mΩ
1000Ω	0.05% ± 5 dig.	10mΩ
10kΩ	0.05% ± 5 dig.	100mΩ
100kΩ	0.05% ± 5 dig.	1Ω
1000kΩ	0.05% ± 5 dig.	10Ω
10MΩ	0.3% ± 2 dig.	100Ω

Maximum Input: 1000V DC or AC rms, any range.

Maximum Open Circuit Voltage: 3.5V

DC Current

Range	Accuracy	Resolution
10mA	0.05% ± 5 dig.	100nA
100mA	0.05% ± 5 dig.	1uA
1A	0.2% ± 5 dig.	10uA
10A	0.2% ± 5 dig to 5A	100uA
10A	0.5% ± 10 dig to 10A	100uA

Maximum Input: mA ranges - 1.6A DC or AC rms, 1000V, fuse protected.
10A range - 10A DC or AC rms, 1000V, fuse protected.

Typical Voltage Burden: 10mA range - <100mV
10A, 1A and 100mA ranges - <600mV

AC Current (True RMS)

Range	Accuracy (45Hz - 10kHz)	Resolution
10mA	0.35% ± 20 dig.	100nA
100mA	0.35% ± 20 dig.	1uA
1A	0.5% ± 20 dig.	10uA
10A	0.5% ± 20 dig to 5A	100uA
10A	1% ± 20 dig. to 10A	100uA

Accuracy specifications apply for readings between 10,000 and 120,000 counts. Additional error at crest factory = 3 typically 0.5%.

Maximum Input: mA ranges - 1.6A DC or AC rms, 1000V, fuse protected.
10A range - 10A DC or AC rms, 1000V, fuse protected.

Typical Voltage Burden: 10mA range - <100mV
10A, 1A and 100mA ranges - <600mV

(AC + DC) Current Accuracy

Total measurement error will not exceed the sum of the separate ac and dc accuracy specifications plus 10 display counts.

Frequency

Range	Accuracy	Resolution
100Hz	0.01% ± 1 dig.	0.01Hz
1000Hz		0.1Hz
10kHz		1Hz
100kHz		10Hz

Accuracy specifications for 100Hz range apply only at slow measurement speed of 4 readings per second.

Range: 10Hz to 100kHz

Input sensitivity: Better than 30mVrms (100mV range); better than 10% of range for all other Vac and Iac ranges.

Capacitance

Scale length: 1200 counts

Range	Accuracy	Resolution
10nF	2% ± 5 dig.	10pF
100nF		100pF
1uF		1nF
10uF		10nF
100uF	5% ± 5 dig.	100nF

Temperature

Linearised measurement for PT100 or PT1000 RTD probes, 2-wire or 4-wire measurement display in °C or °F.

RTD	Range	Accuracy	Resolution
PT100	-50 to 400°C	0.05% ± 0.5°C	0.1°C
PT1000	-50 to 400°C	0.05% ± 0.5°C	0.1°C

Accuracy specifications apply to multimeter only, they do not account for additional probe accuracy errors.

Continuity and Diode Test

Continuity: 1000Ω range selected; audible tone sounds for impedance <10Ω.

Diode Test: Test current approximately 1mA; displays voltages up to 1.2V.

Maximum Open Circuit Voltage: 3.5V

Maximum Input: 1000V DC or AC rms, any range.

TRIGGER

External Remote Trigger (TTL/CMOS)

Connection: Terminal block on rear panel.

Input: Input to the LED of an opto-isolator through 1kΩ resistor. Apply >+3V to trigger remote input. Max. Voltage 10V.

Output: Opto-isolated open collector output, conducts for 250ms on completion of input trigger. Max. off-state Voltage: 10V. On state sink current 2mA (typical).

DISPLAY

Display Type:	High contrast backlit LCD. Main display 5½ digits 16mm high, secondary display 6 digits 10mm high.
Scale Length:	5¼ digits (120,000 counts) in most modes.
Annunciators:	LCD annunciators for all ranges, functions and program modes.
Reading Rate:	Varies with function, selectable between 4 SPS and 20 SPS.
Overrange:	Displays OFL if input too great for range.
Overflow:	Displays -Or- if calculated result overflows display.

COMPUTING FUNCTIONS

Null (Relative)	Stores current reading and subtracts it from future readings.
Ω Null:	Additional non-volatile function for nulling test lead resistance.
Hold:	Reading is frozen
T-Hold (Touch & Hold):	Reading is frozen when stable.
dB:	Displays measurement in dBm relative to 600Ω or other user-entered impedance.
AC plus DC:	The RMS value of the ac plus dc parts of the signal is calculated and displayed.
% Deviation:	Displays % deviation from entered reference value.
Ax+b:	Linear scaling of results, with offset.
Limits:	Reading displayed with HI, LO, or PASS with respect to user-defined high and low limits.
Min/Max:	Minimum and maximum reading stored.
Power:	Calculates V^2/R and displays in Watts with respect to a user-defined impedance.
VA:	Calculates and displays Volts x Amps.
Data Logger:	Manual or automatic storage of 500 measurements. Storage interval 1s to 9999s or at the measurement sample rate, manually from keyboard, or by external triggering.

INTERFACES

Full digital remote control facilities are available through the RS232, LAN, USB and GPIB interfaces on programmable models. Host powered USB on non-programmable models.

RS232:	Standard 9-pin D-connector. Baud rate 9600.
USB:	Standard USB 2.0 hardware connection.
LAN:	Ethernet 100/10base-T hardware connection. 1.4 LXI Core 2011.
GPIB:	Conforms with IEEE488.1 and IEEE488.2.
Remote Command Processing Time:	Typically <100ms.

POWER REQUIREMENTS

AC Input:	230V or 115V AC ±10%, 50/60Hz, by internal adjustment; 20VA max.
Batteries:	Internal rechargeable Nickel Metal Hydride
Battery Life:	> 20 hours with the backlight enabled. Battery life can be increased to > 35 hours with the backlight disabled.

GENERAL

Operating Range:	+5°C to + 40°C, 20% to 80% RH
Storage Range:	–20°C to + 60°C
Environmental:	Indoor use at altitudes up to 2000m, Pollution Degree 2.
Safety & EMC:	Complies with EN61010-1, EN61010-2-030, EN61010-2-033 & EN61326-1. For details, request the EU Declaration of Conformity for this instrument via http://www.aimtti.com/support (serial no. needed).
Size:	250(W) x 97(H) x 295(D)mm in bench-top configuration 213.5(W) x 86.5(H) x 269(D)mm (2U/ ½ - rack) in rack-mount format
Weight:	3.2kg.



Thurlby Thandar Instruments Ltd.

Glebe Road • Huntingdon • Cambridgeshire • PE29 7DR • England (United Kingdom)

Telephone: +44 (0)1480 412451 • Fax: +44 (0)1480 450409

International web site: www.aimtti.com • UK web site: www.aimtti.co.uk

Email: info@aimtti.com