Single-Ended Cordsets

BCC M323-0000-10-001-VX8334-030
Order Code: BCC08MC

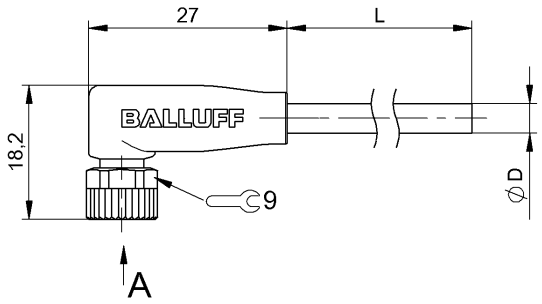

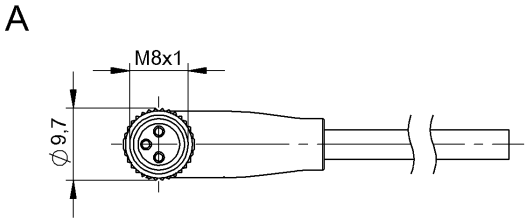

Basic features

Approval/Conformity	CE cULus EAC WEEE

Electrical connection

Bending radius min., fixed cable	5 x D
Bending radius min., flexible cable	10 x D
Cable	PVC gray, 3 m, drag chain compatible
Cable diameter D	4.50 mm ±0.15 mm
Cable, bending cycles min.	2 mil.
Conductor cross-section	0.34 mm²
Connection	M8x1-Female, angled, 3-pin, A-coded
Connector configuration	right-angle
Number of conductors	3
Number of pins	3
System	Molded

Electrical data

Operating voltage Ub	60 VDC / 60 VAC
Rated current (40 °C)	4.0 A

Environmental conditions

Cable temperature UL max., fixed routing	80 °C
Cable temperature UL max., flexible routing	80 °C
Cable temperature, drag chain	-5...60 °C
Cable temperature, fixed routing	-40...105 °C
Cable temperature, flexible routing	-5...105 °C
IP rating	IP67, IP69K

Material

Cable jacket, material	PVC
Material contact carrier	PUR
Material contacts	Bronze
Material cover nut	Die-cast zinc or nickel plated brass
Material grip	PUR

Mechanical data

Acceleration max., drag chain	5 m/s²
Cable jacket, color	gray
Cable length L	3.00 m
Cable properties	drag chain compatible
Horizontal travel permitted, drag chain	5 m
Tightening torque pigtail	0.4 Nm
Traverse speed max., drag chain	200 m/min
Vertical travel permitted, drag chain	2 m

Remarks

Cable construction acc. to UL-AWM Style 2517
Silicone-free
Flame resistance per IEC 60332-1-2
Enclosure rating per IEC 60529 or 20653, only in screwed state with the associated mating piece.

BCC M323-0000-10-001-VX8334-030
Order Code: BCC08MC

Connector Drawings

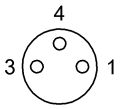

PIN 1: brown
PIN 3: blue
PIN 4: black

Wiring Diagrams

