# IF503A

## Inductive full-metal sensor

IFK3003BBPKG/AM/US104DPS/3G/3D

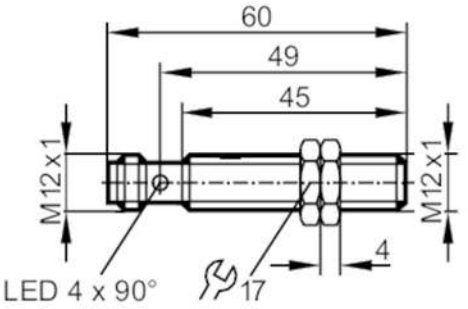


| | | |
|---|---|---|
| **Product characteristics** | | |
| Electrical design | | PNP |
| Output function | | normally open |
| Sensing range | [mm] | 3 |
| Housing | | threaded type |
| Dimensions | [mm] | M12 x 1 / L = 60 |
| **Application** | | |
| Special feature | | Gold-plated contacts; Increased sensing range; Full-metal housing |
| Pressure rating | [bar] | 100 |
| Note on pressure rating | | sensing face |
| **Electrical data** | | |
| Operating voltage | [V] | 10...30 DC |
| Current consumption | [mA] | < 20 |
| Protection class | | III |
| Reverse polarity protection | | yes |
| **Outputs** | | |
| Electrical design | | PNP |
| Output function | | normally open |
| Max. voltage drop switching output DC | [V] | 2.5 |
| Permanent current rating of switching output DC | [mA] | 100 |
| Switching frequency DC | [Hz] | 100 |
| Short-circuit protection | | yes |
| Overload protection | | yes |
| **Detection zone** | | |
| Sensing range | [mm] | 3 |
| Real sensing range Sr | [mm] | 3 ± 10 % |
| Operating distance | [mm] | 0...2.43 |
| Increased sensing range | | yes |
| **Accuracy / deviations** | | |
| Correction factor | | steel: 1 / stainless steel: 0.6 / brass: 0.7 / aluminium: 0.6 / copper: 0.3 |

# IF503A

## Inductive full-metal sensor

IFK3003BBPKG/AM/US104DPS/3G/3D

| | | | |
|---|---|---|---|
| Hysteresis | [% of Sr] | 1...20 | |
| Switch point drift | [% of Sr] | -10...10 | |
| **Operating conditions** | | | |
| Ambient temperature | [°C] | -40...60 | |
| Protection | | IP 67;  (when used outside the hazardous area: IP 65, IP 67, IP 68, IP 69K) | |
| **Tests / approvals** | | | |
| ATEX marking | | II 3G Ex ec IIC T6 Gc X; II 3D Ex tc IIIC T85°C Dc X | |
| EMC | | EN 61000-4-2 ESD | 4 kV CD / 8 kV AD |
| | | EN 61000-4-3 HF radiated | 10 V/m |
| | | EN 61000-4-4 Burst | 2 kV |
| | | EN 61000-4-6 HF conducted | 10 V |
| | | EN 55011 | class B |
| Impact resistance | | EN 60068-2-75 Ehc | 1 J |
| Vibration resistance | | EN 60068-2-6 Fc | 20 g (10...3000 Hz) / 50 sweep cycles, 1 octave per minute, in 3 axes |
| Shock resistance | | EN 60068-2-27 Ea | 100 g 11 ms half-sine; 3 shocks each in every direction of the 3 coordinate axes |
| Continuous shock resistance | | EN 60068-2-27 Ea | 40 g 6 ms; 4000 shocks each in every direction of the 3 coordinate axes |
| Fast temperature change | | EN 60068-2-14 Na | TA = -40°C; TB = 85°C; t1 = 30 min; t2 = 10 s 50 cycles |
| Salt spray test | | EN 60068-2-52 Kb | severity level 5 (4 test cycles) |
| MTTF | [years] | 1258 | |
| **Mechanical data** | | | |
| Weight | [g] | 54 | |
| Housing | | threaded type | |
| Mounting | | flush mountable | |
| Dimensions | [mm] | M12 x 1 / L = 60 | |
| Thread designation | | M12 x 1 | |
| Materials | | stainless steel (1.4404 / 316L); PEI; lock nuts: stainless steel | |
| Tightening torque | [Nm] | 15 | |
| Full-metal housing | | yes | |
| **Displays / operating elements** | | | |
| Display | | switching status | 4 x 90° LED, yellow |
| **Accessories** | | | |
| Items supplied | | lock nuts: 2 | |
| **Remarks** | | | |
| Pack quantity | | 1 pcs. | |

# IF503A

## Inductive full-metal sensor

**IFK3003BBPKG/AM/US104DPS/3G/3D**

### Electrical connection - plug

Connector: 1 x M12; coding: A; Contacts: gold-plated

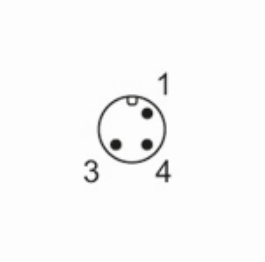


### Connection

