IGR202

Inductive full-metal sensor

IGK3006BANKG/AM/SC/US-104

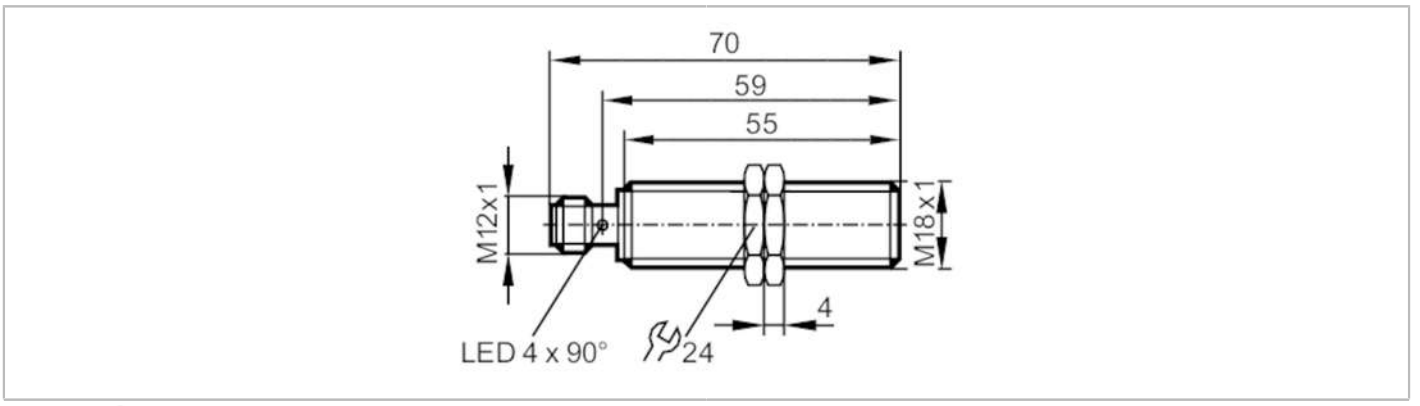

Product characteristics		
Electrical design		NPN
Output function		normally open
Sensing range	[mm]	6
Housing		threaded type
Dimensions	[mm]	M18 x 1 / L = 70
Application		
Special feature		Gold-plated contacts; Increased sensing range; Full-metal housing; Magnetic-field immune; anti-spatter
Application		Use in welding applications
Pressure rating	[bar]	100
Note on pressure rating		sensing face
Magnetic-field immune		yes; (pulse duration of the welding current: < 200 ms)
Electrical data		
Operating voltage	[V]	10...30 DC
Current consumption	[mA]	< 20
Protection class		III
Reverse polarity protection		yes
Outputs		
Electrical design		NPN
Output function		normally open
Max. voltage drop switching output DC	[V]	2.5
Permanent current rating of switching output DC	[mA]	100
Switching frequency DC	[Hz]	2
Short-circuit protection		yes
Type of short-circuit protection		pulsed
Overload protection		yes
Detection zone		
Sensing range	[mm]	6
Operating distance	[mm]	0...4.9

IGR202

Inductive full-metal sensor

IGK3006BANKG/AM/SC/US-104

Increased sensing range		yes	
Accuracy / deviations			
Correction factor		steel: 1 / stainless steel: 0.7 / brass: 0.7 / aluminium: 0.5 / copper: 0.2	
Hysteresis	[% of Sr]	1...20	
Operating conditions			
Ambient temperature	[°C]	0...85	
Protection		IP 67	
Tests / approvals			
EMC		EN 61000-4-2 ESD	4 kV CD / 8 kV AD
		EN 61000-4-3 HF radiated	10 V/m
		EN 61000-4-4 Burst	2 kV
		EN 61000-4-6 HF conducted	10 V
		EN 55011 emission	class B
Impact resistance			1 J
MTTF	[years]	1116	
Embedded software included		yes	
UL approval		Ta	-25...70 °C
		Enclosure type	Type 1
		power supply	Limited Voltage/Current
		UL Approval no.	A012
		File number UL	E174191
Mechanical data			
Weight	[g]	55	
Housing		threaded type	
Mounting		flush mountable	
Dimensions	[mm]	M18 x 1 / L = 70	
Thread designation		M18 x 1	
Materials		housing: stainless steel (1.4404 / 316L) anti-spatter; sensing face: stainless steel (1.4404 / 316L) anti-spatter; LED window: PEI; lock nuts: stainless steel (1.4404 / 316L) anti-spatter	
Tightening torque	[Nm]	20	
Full-metal housing		yes	
Displays / operating elements			
Display		switching status	4 x 90° LED, yellow
		operation	1 x LED, green
Accessories			
Items supplied		lock nuts: 2	
Remarks			
Pack quantity		1 pcs.	

IGR202

Inductive full-metal sensor

IGK3006BANKG/AM/SC/US-104

Electrical connection

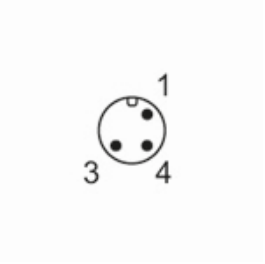

Connection

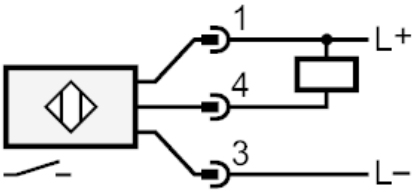

Electrical connection - plug

Connector: 1 x M12; Contacts: gold-plated

Diagrams and graphs

Installation

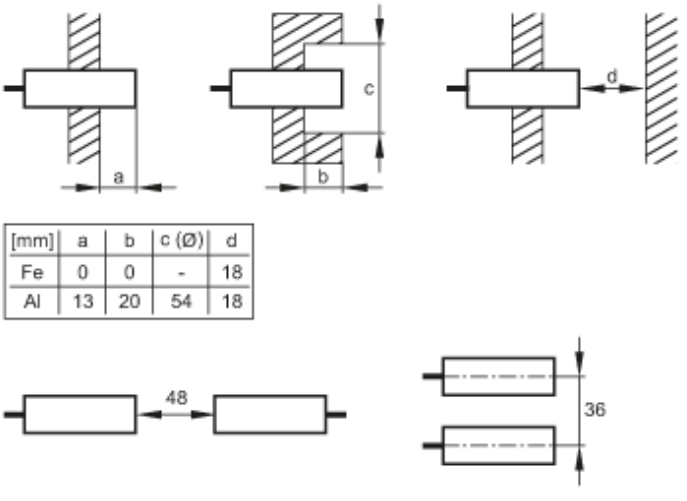

[mm]	a	b	c (Ø)	d
Fe	0	0	-	18
Al	13	20	54	18