Current Transducer CTSR series I_{PRN} = 300, 600 mA

Ref:CTSR 0.3-P; CTSR 0.6-P

For the electronic measurement of current: DC, AC, pulsed..., with galvanic separation between the primary circuit and the secondary circuit.



Features

- Closed loop (compensated) current transducer
- Voltage output
- Single supply voltage
- PCB mounting.

Advantages

- High accuracy
- Very low offset drift over temperature
- Wide aperture
- High overload capability
- High insulation capability
- Reference pin with two modes, Ref In and Ref Out
- Degauss and test functions.

Applications

- Residual current measurement
- Leakage current measurement in transformerless PV inverters
- First human contact protection of PV arrays
- Failure detection in power sources
- Symmetrical fault detection (e.g. after motor inverter)
- Leakage current detection in stacked DC sources
- Single phase or three phase nominal current measurement up to ±30 A per wire (DC or AC).

Standards

- EN 50178: 1997
- IEC 61010-1: 2010
- UL 508: 2010.

Application Domain

- Industrial
- Suitable to fulfil VDE 0126-1-1 and UL 1741.

12July2024/Version 9

LEM reserves the right to carry out modifications on its transducers, in order to improve them.

LEM International SA
Route du Nant-d'Avril, 152
1217 Meyrin
www.lem.com

Safety



Caution

If the device is used in a way that is not specified by the manufacturer, the protection provided by the device may be compromised.
Always inspect the electronics unit and connecting cable before using this product and do not use it if damaged.
Mounting assembly shall guarantee the maximum primary conductor temperature, fulfill clearance and creepage distance, minimize electric and magnetic coupling, and unless otherwise specified can be mounted in any orientation.



Caution, risk of electrical shock

This transducer must be used in limited-energy secondary circuits SELV according to IEC 61010-1, in electric/electronic equipment with respect to applicable standards and safety requirements in accordance with the manufacturer's operating specifications.

Use caution during installation and use of this product; certain parts of the module can carry hazardous voltages and high currents (e.g. power supply, primary conductor).
Ignoring this warning can lead to injury and or/or cause serious damage.
De-energize all circuits and hazardous live parts before installing the product.
All installations, maintenance, servicing operations and use must be carried out by trained and qualified personnel practicing applicable safety precautions.

This transducer is a build-in device, whose hazardous live parts must be inaccessible after installation.
This transducer must be mounted in a suitable end-enclosure.
Besides make sure to have a distance of minimum 30 mm between the primary terminals of the transducer and other neighboring components.

Main supply must be able to be disconnected.
Always inspect the flexible probe for damage before using this product.
Never connect or disconnect the external power supply while the primary circuit is connected to live parts.
Never connect the output to any equipment with a common mode voltage to earth greater than 30 V.
Always wear protective clothing and gloves if hazardous live parts are present in the installation where the measurement is carried out.
This transducer is a built-in device, not intended to be cleaned with any product. Nevertheless if the user must implement cleaning or washing process, validation of the cleaning program has to be done by himself.
When defining soldering process, please use no cleaning process only.



ESD susceptibility
The product is susceptible to be damaged from an ESD event and the personnel should be grounded when handling it.

Do not dispose of this product as unsorted municipal waste. Contact a qualified recycler for disposal.



Underwriters Laboratory Inc. recognized component

Absolute maximum ratings

Parameter	Symbol	Unit	Value
Maximum supply voltage	$U_{C\,max}$	V	7
Maximum primary conductor temperature	$T_{B\,max}$	°C	110
Maximum Primary withstand peak current (100 µs, 500 A/µs)	$\hat{I}_{P\,max}$	A	3300

Stresses above these ratings may cause permanent damage. Exposure to absolute maximum ratings for extended periods may degrade reliability.

UL 508: Ratings and assumptions of certification

File # E189713 Volume: 2 Section: 3

Standards

- CSA C22.2 NO. 14-10 INDUSTRIAL CONTROL EQUIPMENT - Edition 11 - Revision Date 2011/08/01
- UL 508 STANDARD FOR INDUSTRIAL CONTROL EQUIPMENT - Edition 17 - Revision Date 2010/04/15

Ratings

Parameter	Symbol	Unit	Value Version P	Value Version TP
Primary involved potential*		V AC/DC	600	1000
Max surrounding air temperature	T_A	°C	105	
Primary current	I_P	A	According to series primary currents	
Secondary supply voltage	U_C	V DC	5	
Output voltage	U_{out}	V	0 to 7	

* Enviromental: For use in Pollution degree 2.

Conditions of acceptability

When installed in the end-use equipment, consideration shall be given to the following:

1 - A suitable enclosure shall be provided in the end-use application.

2 - The insulation between the primary and the secondary sensing circuits were evaluated with 4250 V AC for CTSR 0.6-TP/SP and 2200 V AC for CTSR 0.6-P in dielectric voltage withstand test.

5 - CTSR series is intended to be mounted on the printed wiring board of the end-use equipment.

7 - The uninsulated live parts of primary feeder and secondary circuit clearance spacing of Model CTSR XX-P series shall maintain at least 5.5 mm apart.

8 - Primary feeder of the devices shall be connected after an overvoltage device or system which has been evaluated by the Standard for Transient Voltage Surge Suppressors, UL 1449.

Marking

Only those products bearing the UL or UR Mark should be considered to be Listed or Recognized and covered under UL's Follow-Up Service. Always look for the Mark on the product.

Insulation coordination

Parameter	Symbol	Unit	Value	Comment
RMS voltage for AC insulation test, 50 Hz, 1 min	U_d	kV	5.4	
Impulse withstand voltage 1.2/50 µs	U_{Ni}	kV	10.1	
Partial discharge RMS test voltage (q_m < 10 pC)	U_t	kV	1.65	
Clearance (pri. - sec.)	d_{Cl}	mm	11	Shortest distance through air
Creepage distance (pri. - sec.)	d_{Cp}	mm	11	Shortest path along device body
Comparative tracking index	CTI		600	
Application example	-	V	1000	Reinforced insulation, CAT III, PD2 non uniform field according to EN 50178
Application example	-	V	600	Reinforced insulation, CAT III, PD3 non uniform field according to EN 50178, IEC 61010

Environmental and mechanical characteristics

Parameter	Symbol	Unit	Min	Typ	Max	Comment
Ambient operating temperature	T_A	°C	−40		105	
Ambient storage temperature	$T_{A\,st}$	°C	−50		105	
Mass	m	g		28		

LEM reserves the right to carry out modifications on its transducers, in order to improve them.

LEM International SA
Route du Nant-d'Avril, 152
1217 Meyrin
www.lem.com

Electrical data CTSR 0.3-P

At T_A = 25 °C, U_C = +5 V, output voltage referred to U_{ref}, unless otherwise noted (see Min., Max., typical definition paragraph) in page 9.

Parameter	Symbol	Unit	Min	Typ	Max	Comment
Primary nominal residual RMS current	I_{PRN}	mA		300		
Primary residual current, measuring range	I_{PRM}	mA	−500		500	
Supply voltage	U_C	V	4.75	5	5.25	
Current consumption	I_C	mA		17.5	21.6	$+I_P$ (mA)/N_S With N_S = 1000 turns −40 ... 105 °C
Output voltage referred to GND (during Degauss cycle)	U_{out}	V		0.3	0.5	1)
Output voltage referred to U_{ref} (Test current)	U_{out}	V	0.7	1.2	1.7	1)
Reference voltage @ I_P = 0	U_{ref}	V	2.495	2.5	2.505	Internal reference
External reference voltage	U_{ref}	V	2.3		4	Internal reference of U_{ref} input = 499 Ω 1)
Electrical offset current referred to primary 2)	I_{OE}	mA	−24	7	24	
Temperature coefficient of U_{ref} @ I_P = 0	TCU_{ref}	ppm/K			±50	−40 ... 105 °C
Temperature coefficient of U_{OE} @ I_P = 0	TCU_{OE}	ppm/K			±570	ppm/K of 2.5 V −40 ... 105 °C
Nominal sensitivity	S_N	V/A		4		
Sensitivity error 2)	ε_S	%	−1.6	0.5	1.6	R_L > 500 kΩ
Temperature coefficient of S	TCS	ppm/K			±230	−40 ... 85 °C
					±400	−40 ... 105 °C
Linearity error	ε_L	% of I_{PRM}		0.5	1	
Magnetic offset current (1000 x I_{PRN}) referred to primary	I_{OM}	mA		17		
RMS noise voltage (1 Hz ... 10 kHz)	U_{no}	mV		6		R_L > 500 kΩ
Delay time to 10 % to the final output value for I_{PN} step	t_{D10}	µs		7		R_L > 500 kΩ, di/dt > 5 A/µs
Delay time to 90 % to the final output value for I_{PN} step	t_{D90}	µs		50		R_L > 500 kΩ, di/dt > 5 A/µs
Frequency bandwidth (−1 dB)	BW	kHz		3.5		R_L > 500 kΩ
Error 3)	ε	%			1.9	= $(\varepsilon_S^2 + \varepsilon_L^2)^{1/2}$

Notes:
1) See “Application information” section.
2) Only with a primary nominal residual current, see paragraph “Primary nominal residual current and primary nominal current”.
3) Total error @ T_A and I_P: $\varepsilon_{tot}(T_A) = (\varepsilon^2 + (TCS \times 100 \times (T_A - 25))^2 + (TCU_{OE} \times 2.5 \times (T_A - 25)/S_N \times 100/I_P)^2)^{1/2}$.

LEM reserves the right to carry out modifications on its transducers, in order to improve them.

LEM International SA
Route du Nant-d'Avril, 152
1217 Meyrin
www.lem.com

Typical performance characteristics CTSR 0.3-P

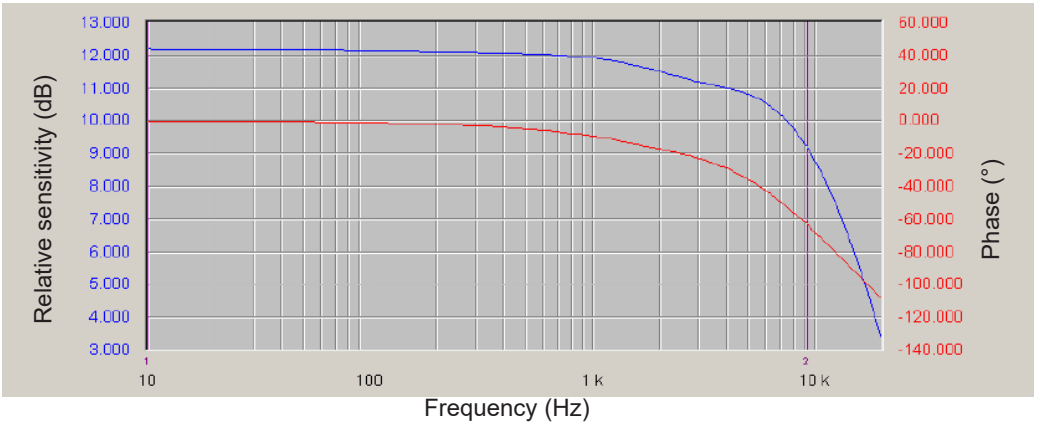

Figure 1: Frequency response

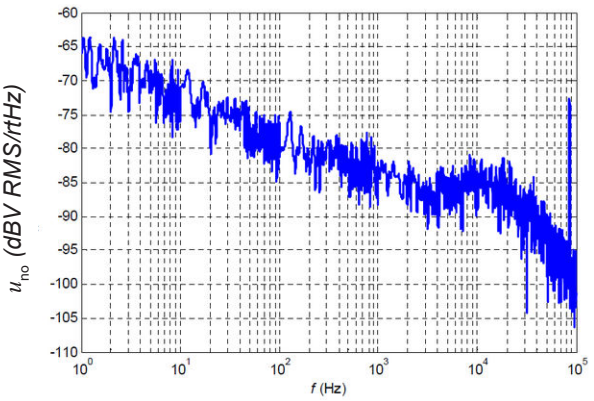

Figure 2: Noise voltage spectral density

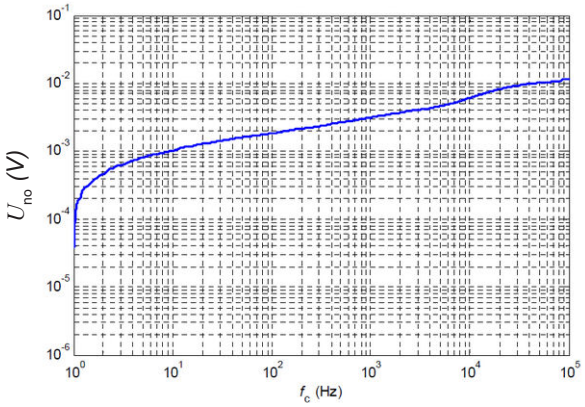

Figure 3: RMS noise voltage

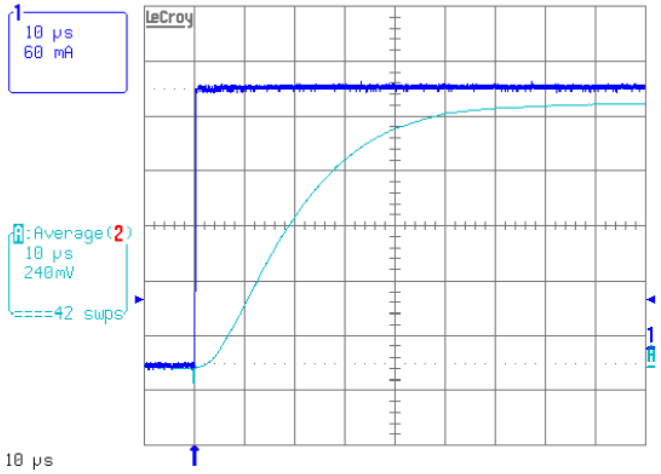

Figure 4: Typical step response

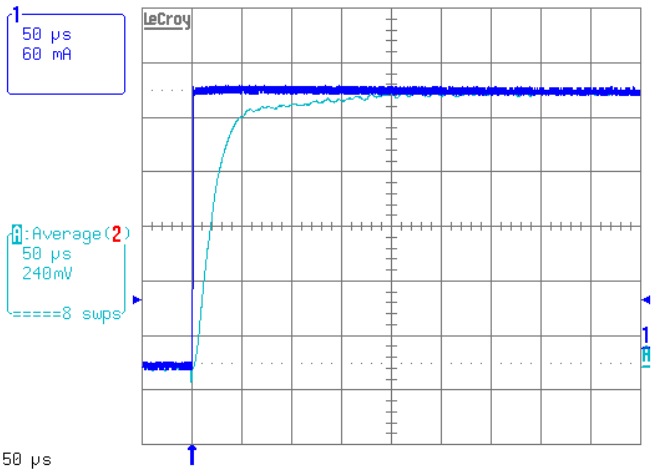

Figure 5: Typical step response

LEM reserves the right to carry out modifications on its transducers, in order to improve them.

LEM International SA
Route du Nant-d'Avril, 152
1217 Meyrin
www.lem.com

Electrical data CTSR 0.6-P

At T_A = 25 °C, U_C = +5 V, output voltage referred to U_{ref}, unless otherwise noted (see Min., Max., typical definition paragraph) in page 9.

Parameter	Symbol	Unit	Min	Typ	Max	Comment
Primary nominal residual RMS current	I_{PRN}	mA		600		
Primary residual current, measuring range	I_{PRM}	mA	−850		850	
Supply voltage	U_C	V	4.75	5	5.25	
Current consumption	I_C	mA		17.5	21.6	$+I_P$ (mA)/N_S With N_S = 1000 turns −40 ... 105 °C
Output voltage referred to GND (during Degauss cycle)	U_{out}	V		0.3	0.5	1)
Output voltage referred to U_{ref} (Test current)	U_{out}	V	0.001	0.75	1.1	1)
Reference voltage @ I_P = 0	U_{ref}	V	2.495	2.5	2.505	Internal reference
External reference voltage	U_{ref}	V	2.3		4	Internal reference of U_{ref} input = 499 Ω 1)
Electrical offset current referred to primary 2)	I_{OE}	mA	−24	4.2	24	
Temperature coefficient of U_{ref} @ I_P = 0	TCU_{ref}	ppm/K			±50	−40 ... 105 °C
Temperature coefficient of U_{OE} @ I_P = 0	TCU_{OE}	ppm/K			±520	ppm/K of 2.5 V −40 ... 105 °C
Nominal sensitivity	S_N	V/A		2.476		
Sensitivity error 2)	ε_S	%	−0.7	0.3	0.7	R_L > 500 kΩ
Temperature coefficient of S	TCS	ppm/K			±100	−40 ... 105 °C
Linearity error	ε_L	% of I_{PRM}		0.4	1.3	
Magnetic offset current (1000 x I_{PRN}) referred to primary	I_{OM}	mA		17		
RMS noise voltage (1 Hz ... 10 kHz)	U_{no}	mV		4		R_L > 500 kΩ
Delay time to 10 % to the final output value for I_{PN} step	t_{D10}	µs		5		R_L > 500 kΩ, di/dt > 5 A/µs
Delay time to 90 % to the final output value for I_{PN} step	t_{D90}	µs		30		R_L > 500 kΩ, di/dt > 5 A/µs
Frequency bandwidth (−1 dB)	BW	kHz		9.5		R_L > 500 kΩ
Error 3)	ε	%			1.5	= $(\varepsilon_S^2 + \varepsilon_L^2)^{1/2}$

Notes:
1) See “Application information” section.
2) Only with a primary nominal residual current, see paragraph “Primary nominal residual current and primary nominal current”.
3) Total error @ T_A and I_P: $\varepsilon_{tot}(T_A) = (\varepsilon^2 + (TCS \times 100 \times (T_A - 25))^2 + (TCU_{OE} \times 2.5 \times (T_A - 25)/S_N \times 100/I_P)^2)^{1/2}$.

LEM reserves the right to carry out modifications on its transducers, in order to improve them.

LEM International SA
Route du Nant-d'Avril, 152
1217 Meyrin
www.lem.com

Typical performance characteristics CTSR 0.6-P

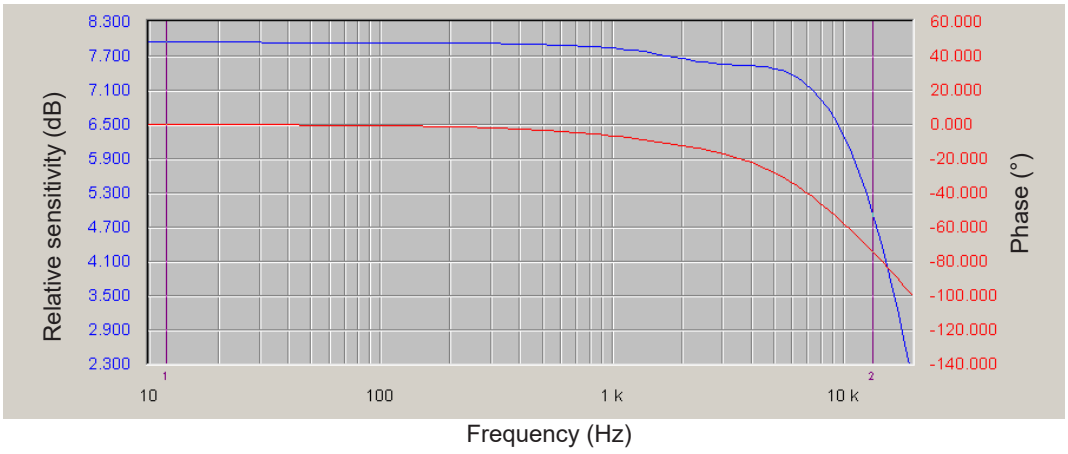

Figure 6: Frequency response

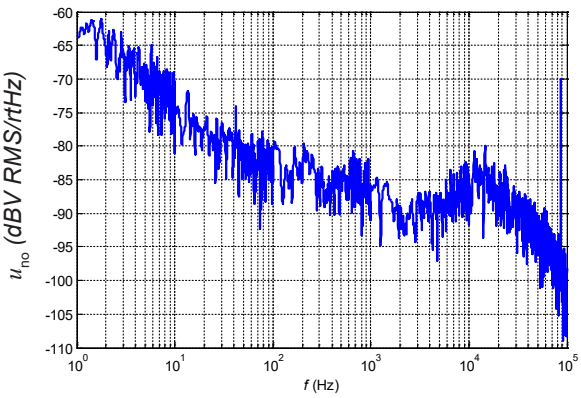

Figure 7: Noise voltage spectral density

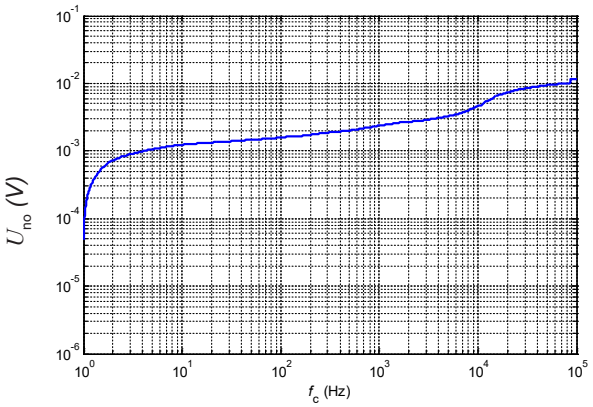

Figure 8: RMS noise voltage

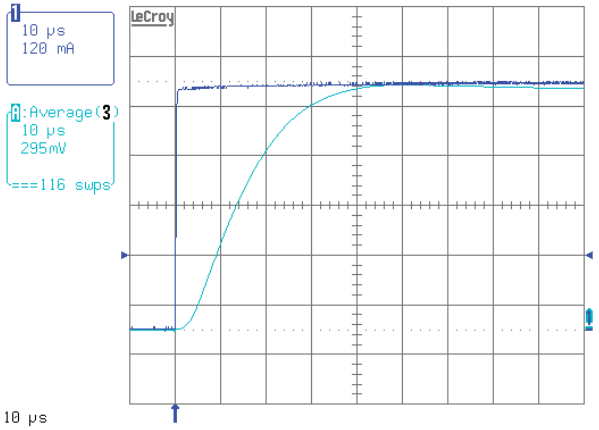

Figure 9: Typical step response

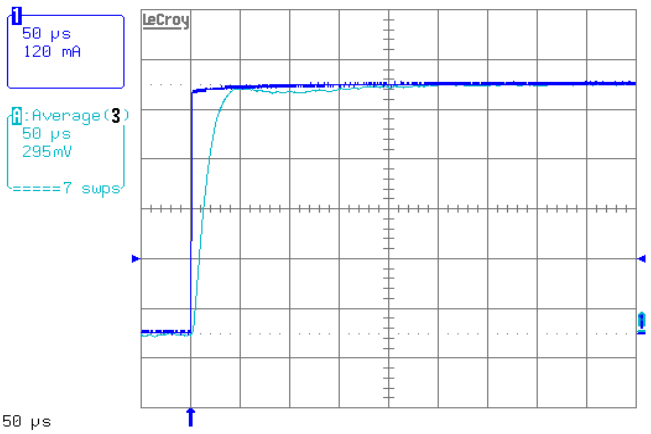

Figure 10: Typical step response

LEM reserves the right to carry out modifications on its transducers, in order to improve them.

LEM International SA
Route du Nant-d'Avril, 152
1217 Meyrin
www.lem.com

Definition of typical, minimum and maximum values

Minimum and maximum values for specified limiting and safety conditions have to be understood as such as well as values shown in “typical” graphs.
On the other hand, measured values are part of a statistical distribution that can be specified by an interval with upper and lower limits and a probability for measured values to lie within this interval.
Unless otherwise stated (e.g. “100 % tested”), the LEM definition for such intervals designated with “min” and “max” is that the probability for values of samples to lie in this interval is 99.73 %.
For a normal (Gaussian) distribution, this corresponds to an interval between −3 sigma and +3 sigma. If “typical” values are not obviously mean or average values, those values are defined to delimit intervals with a probability of 68.27 %, corresponding to an interval between -sigma and +sigma for a normal distribution.
Typical, maximal and minimal values are determined during the initial characterization of a product.

LEM reserves the right to carry out modifications on its transducers, in order to improve them.

LEM International SA
Route du Nant-d'Avril, 152
1217 Meyrin
www.lem.com

Application information

Filtering, decoupling CTSR transducer

Supply voltage U_C (5 V):

The CTSR transducers have internal decoupling capacitors, but in the case of a power supply track on the application PCB having a high impedance, it is advised to provide local decoupling, 100 nF or more, located close to the transducer.

Reference U_{ref}

Ripple present on the U_{ref} pin can be filtered with a low value of capacitance because of the internal 499 ohm series resistance. The CTSR transducers have an internal capacitor of 22 nF between U_{ref} pin and Gnd pin and the maximum filter capacitance value which could be added is 1 µF. Adding a larger decoupling capacitor will increase the activation delay of degauss.

Output U_{out}

The CTSR transducers have an internal low pass filter 470 ohm/22 nF; if a decoupling capacitor is added on U_{out} pin, the bandwidth and the response time will be affected. In case of short circuit, the transducer CTSR can source or sink up to a maximum of 10 mA on its output U_{out}.

Using an external reference voltage

If the U_{ref} pin of the transducer is not used it could be either left unconnected or filtered according to the previous paragraph "Reference U_{ref}".

The U_{ref} pin has two modes Ref out and Ref In:

- In the Ref out mode the 2.5 V internal precision reference is used by the transducer as the reference point for bipolar measurements; this internal reference is connected to the U_{ref} pin of the transducer through a 499 ohms resistor. It tolerates sink or source currents up to ±5 mA, but the 499 ohms resistor prevents this current to exceed these limits.
- In the Ref In mode, an external reference voltage is connected to the U_{ref} pin; this voltage is specified in the range 2.3 to 4 V and is directly used by the transducer as the reference point for measurements. The external reference voltage U_{ref} must be able:
  - o either to source a typical current of $\frac{U_{ref} - 2.5}{499}$, the maximum value will be 3 mA when U_{ref} = 4 V.
  - o or to sink a typical current of $\frac{2.5 - U_{ref}}{499}$, the maximum value will be 0.4 mA when U_{ref} = 2.3 V.

The following graphs show how the measuring range of the transducer depends on the external reference voltage value U_{ref} (U_C = 5 V).

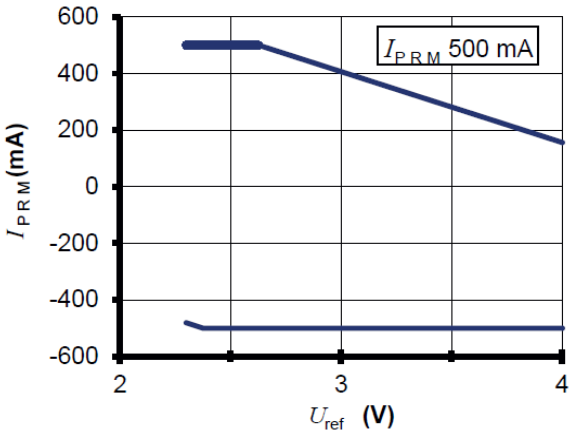

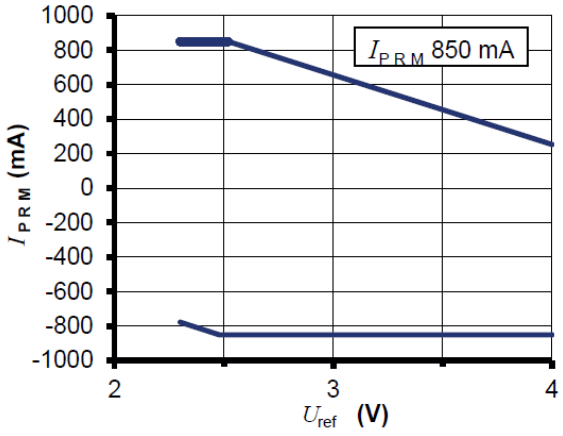

Upper limit: I_P = 500 mA	(U_{ref} = 2.3 ... 2.625 V)	Upper limit: I_P = 850 mA	(U_{ref} = 2.3 ... 2.52 V)
Upper limit: I_P = −250*U_{ref} + 1156.25	(U_{ref} = 2.625 ... 4 V)	Upper limit: I_P = −403.88*U_{ref} + 1867.93	(U_{ref} = 2.52 ... 4 V)
Lower limit: I_P = −250*U_{ref} + 93.75	(U_{ref} = 2.3 ... 2.375 V)	Lower limit: I_P = −403.88*U_{ref} + 151.45	(U_{ref} = 2.3 ... 2.48 V)
Lower limit: I_P = −500 mA	(U_{ref} = 2.375 ... 4 V)	Lower limit: I_P = −850 mA	(U_{ref} = 2.48 ... 4 V)

LEM reserves the right to carry out modifications on its transducers, in order to improve them.

LEM International SA
Route du Nant-d'Avril, 152
1217 Meyrin
www.lem.com

Primary nominal residual current and primary nominal current

The primary nominal residual current is the sum of the instantaneous values of all currents flowing through the aperture of the transducer.
The primary nominal current is the current flowing through any conductor placed into the aperture of the transducer.
The presence of a primary nominal current DC or AC leads to an additional uncertainty.
For example, with a primary nominal current of 30 A the uncertainty referred to primary is typical 4.3 mA.

CTSR transducer in Test mode

When the U_{ref} pin is forced at a low level voltage between 0 and 1 V and is maintained at this level, the output voltage U_{out} of CTSR transducer exhibits a fixed value (see specification) as if it measured a primary test current.
The activation time of test mode is min 30 ms. The CTSR transducer can be maintained in test mode as long as needed for checking that it is fully operating.

CTSR transducer in Degauss mode

The CTSR transducers go in degauss mode automatically at each power on or on demand by using the U_{ref} pin.
At power on:
A degauss is automatically generated at each power on of the CTSR transducer; during degaussing the output voltage U_{out} is maintained at 0.3 V typ. (max 0.5 V). After c.a. 110 ms, the output voltage U_{out} is released and takes the normal operation level in relation with the measured primary current.
Using U_{ref} pin:
When the pin U_{ref} is released from the Low level voltage defined in the Test mode above, there is a rising edge on U_{ref} which generates an automatic degauss.
The activation of degauss takes typically 40 µs after releasing U_{ref} pin, then degauss lasts typically 110 ms.

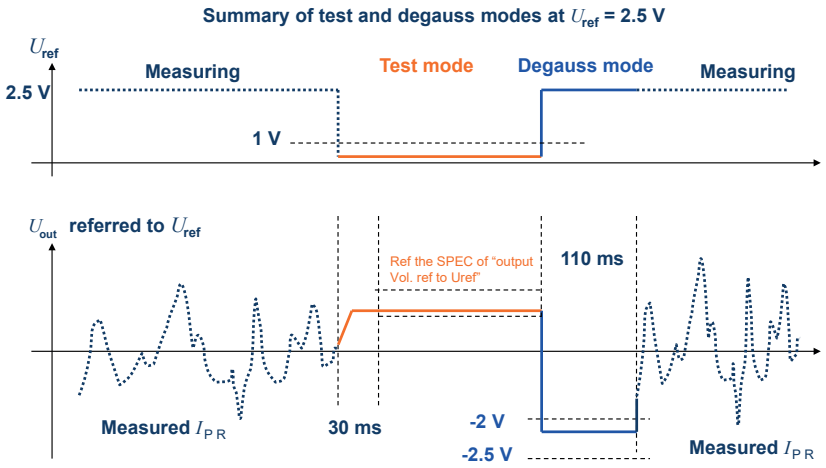

Insulation around the CTSR transducer housing

Due to the joint between the case and the cover of the CTSR transducer, there is some insulation distance to respect when primary conductors pass around the CTSR housing.
The figure below shows the joint and the apertures where the clearance between the secondary part inside the CTSR transducer and the surface of the housing is 3 mm (label E).

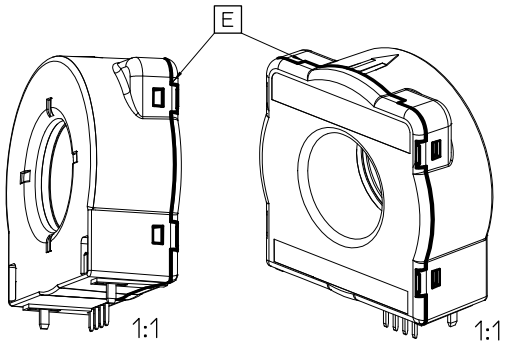

LEM reserves the right to carry out modifications on its transducers, in order to improve them.

LEM International SA
Route du Nant-d'Avril, 152
1217 Meyrin
www.lem.com

PCB footprint

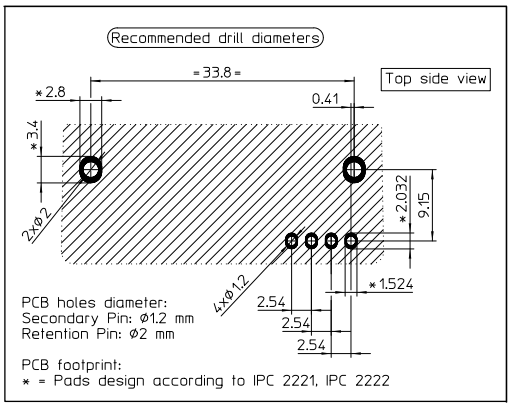

Assembly on PCB

- Recommended PCB hole diameter — 1.2 mm for secondary pin
  2 mm for retention pin
- Maximum PCB thickness — 2.4 mm
- Wave soldering profile — maximum 260 °C, 10 s
  No clean process only

The two retention pins inserted into the case of the transducer are electrically isolated by the housing. Because one of them is close to the secondary connector, it is recommended to connect both to the secondary side GND or +U_C.
Consequently any primary conductor must be placed in the PCB at the requested isolation distance regarding these secondary sides (see also paragraph “Insulation around the CTSR transducer housing”).

LEM reserves the right to carry out modifications on its transducers, in order to improve them.

LEM International SA
Route du Nant-d'Avril, 152
1217 Meyrin
www.lem.com

Dimensions (in mm, general tolerance ±0.3 mm)

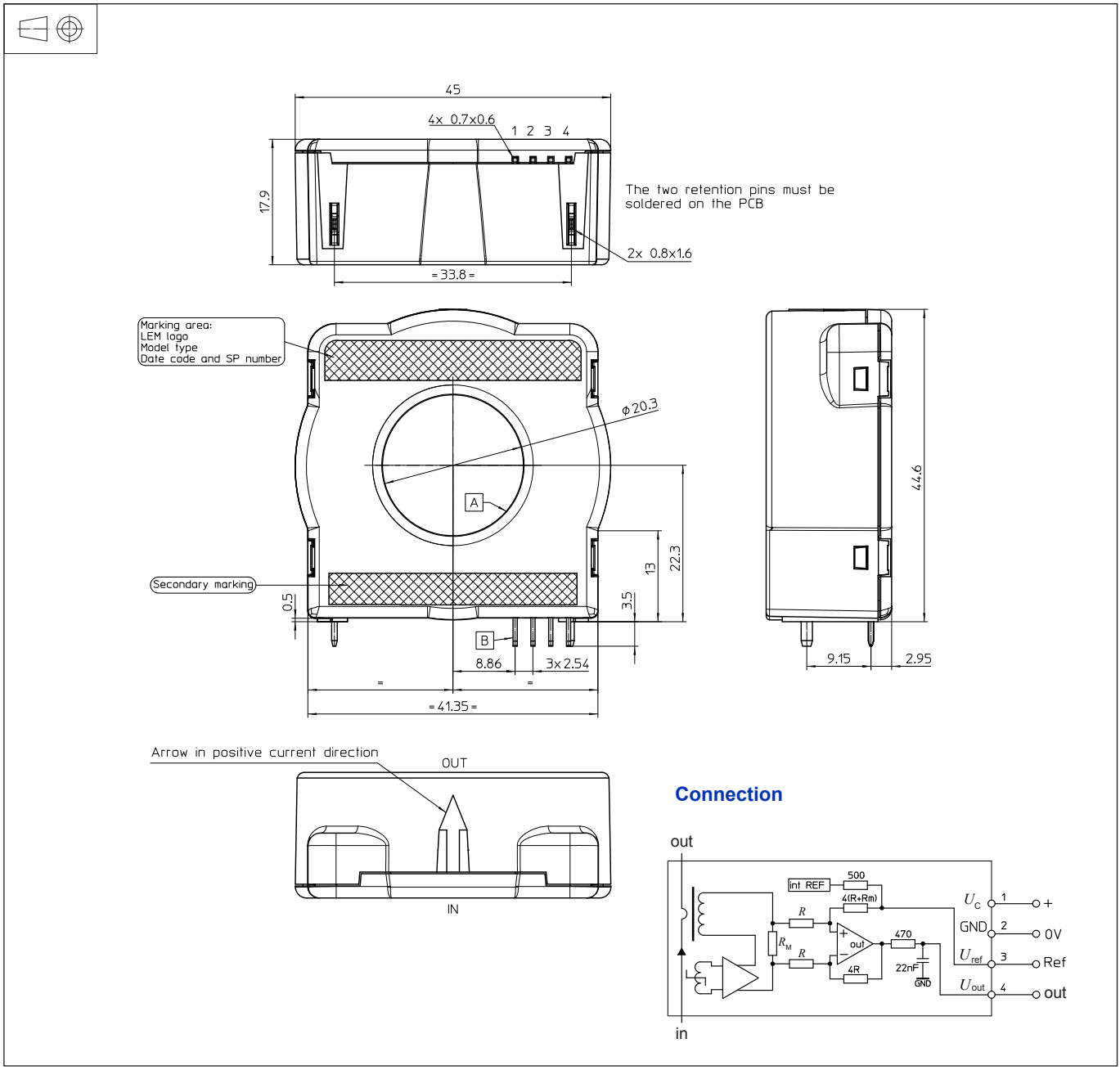

LEM reserves the right to carry out modifications on its transducers, in order to improve them.

LEM International SA
Route du Nant-d'Avril, 152
1217 Meyrin
www.lem.com