Specifications

Eaton 283838

Catalog Number: 283838

Eaton xEnergy Main LV systems LV switchgear. Plinth, HxWxD=200x425x800mm, gray

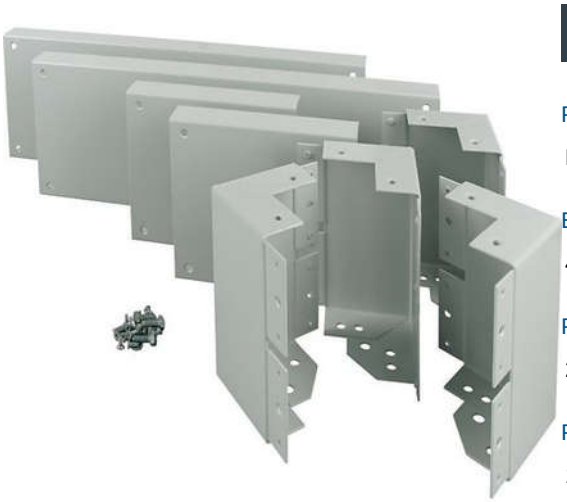

General specifications

Product Name	**Catalog Number**
Eaton xEnergy Main LV switchgear	283838
EAN	**Product Length/Depth**
4015082838386	820 mm
Product Height	**Product Width**
210 mm	220 mm
Product Weight	**Compliances**
14 kg	RoHS conform

Powering Business Worldwide

Product specifications

Used with

Control centres XVTL

Accessory

Type

Accessory

Control centres XVTL

Accessory/spare part type

Plinths

Color

Gray

Unit type

Accessories

Load capacity - max

1500 kg

RAL-number

7035

Suitable for enclosure building length/depth

800 mm

Suitable for enclosure building width

425 mm

Suitable for length/depth

800 mm

Suitable for width

425 mm

Material

Steel

Model

Base complete

Impact strength

IK10

Resources

Brochures

eaton-xenergy-main-brochure-2021-br019030-en-us.pdf

Catalogs

eaton-xenergy-main-catalogue-kat_xenergy_143171_en-gb.pdf



Eaton Corporation plc
Eaton House
30 Pembroke Road
Dublin 4, Ireland
Eaton.com

© 2024 Eaton. All Rights Reserved.

Eaton is a registered trademark.

All other trademarks are property of their respective owners.



Eaton.com/socialmedia