EMC-Power Line Filters for 1-Phase Systems

FMAB Series, all-purpose filters to Protection Class I, conform to EN 133200, UL 1283 and IEC 60950

Nominal current:	12 – 30 A @ 40 °C
Rated voltage U_R (U_{max}):	125/250 VAC 50/60 Hz
Attenuation:	High
Leakage current:	for Industrial applications
Test voltages:	L/N → E 2.7 kVDC, 2 sec
	L → N 1.7 kVDC, 2 sec *
Climatic category:	25/100/21 acc. to IEC 60068-1
50% saturation typ.:	2 to 3 x I_N @ 20 °C
Inrush current:	1.5 x I_N 1 min. per hour
MTBF @ 40 °C / U_R (U_{max}):	> 200'000 h acc. To MIL-HB-217 F

* without resistor

Approvals:



The SCHURTER high current filter family FMAB was specially developed for the following industrial applications:

- Frequency Converters
- Stepper Motor drives
- UPS-Systems
- Inverters

International approvals centers (i.e. UL) today demand high filter performance with regard to attenuation and loading characteristics. During the design, special considerations were made for applications that require high attenuation at the specified maximum load or where asymmetrical loading of the filter occur independently from line impedance at the installation site. The implemented filter range wholly conforms to the requirements of the international standards EN 133200, UL 1283, IEC 60950 and VDE 0565

The filter series are deally suited for applications with EN 55011, EN 55014 and EN 55022 requirements.

- Standard version include insulated safety screw terminals.
- Key features of the high current filter range include:
  - easy, space saving installation
  - high symmetrical and aymmetrical mode attenuation (from 10 kHz to 300 MHz)
- To maximize the filter performance in the application, the following EMC-rules should be considered:
  - physical separation of filter input and output lines
  - physical separation of the interference source itself
  - dedicated earth connection for the filter (min. 10 mm²)

Optional Version:

- Wire lead connections instead of the screw terminals

Contact Schurter for minimum order quantity

Circuit diagram

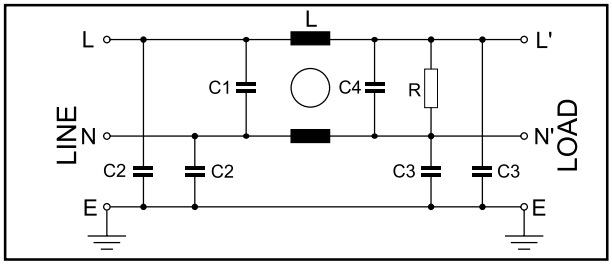

Order Numbers and Technical Data

Type **FMAB**	I_N (1) @ ϑa 40 °C	U_R (Umax)	L_N (2)	Resistance L-L'	Power dissipation total	Leakage current (3) @ 250 V / 50 Hz	C1 (X2)	C2 (Y2)	C3 (Y2)	C4 (X2)	R	Case	Terminal blocks
			-30%/+50%	± 15%	± 15%		± 20%	± 20%	± 20%	± 20%			
	[A]	[VAC]	[mH]	[mΩ]	[W]	[mA]	[µF]	[nF]	[nF]	[µF]	[MΩ]		[mm²]
5500.2064	12	250	2 x 10	14.2	4	< 5.2	2.2	10	47	1.0	1	24-2	4
5500.2065	20	250	2 x 3.5	5.8	4.6	< 5.2	2.2	10	47	1.0	1	24-2	4
5500.2066	30	250	2 x 1.5	2.4	4.3	< 5.6	2.2	15	47	1.0	1	24-6	6

(1) Current derating over 40°C : $I = I_N \times \sqrt{(100-\vartheta a)/60}$

(2) Nominal inductance measured according to EN 138100, see introduction of this catalog, paragraph 3.4

(3) Measured according to IEC 60950 5.2.3 Annex D, see introduction of this catalog, paragraph 3.5

Insertion loss

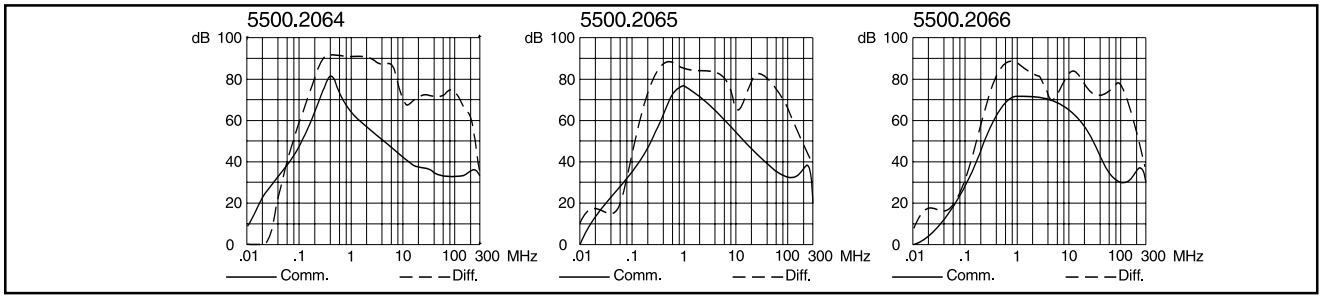

EMC-Power Line Filters for 1-Phase Systems

FMAB and FMBB Series, Cases

Case 16-2

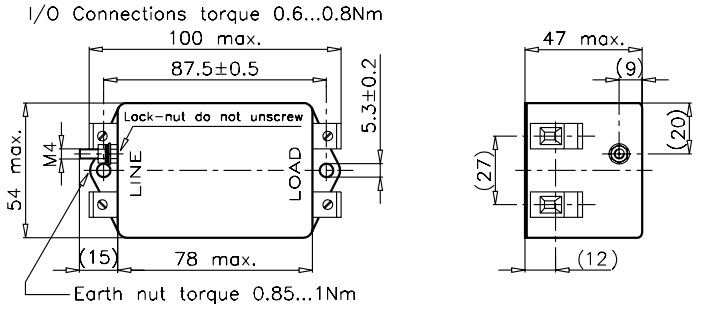

Case 24-2

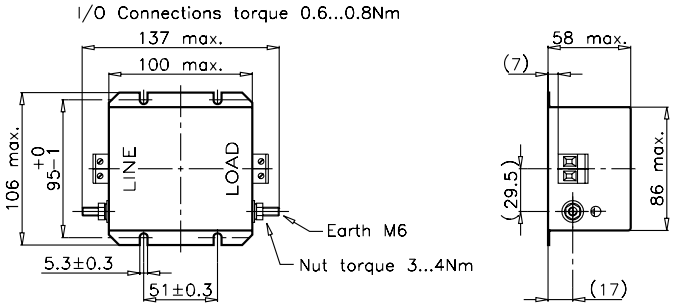

Case 24-6

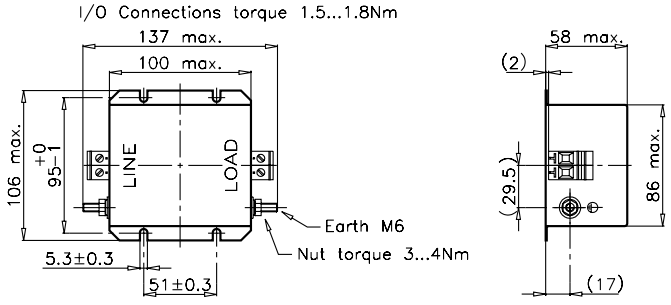

Case 31-2

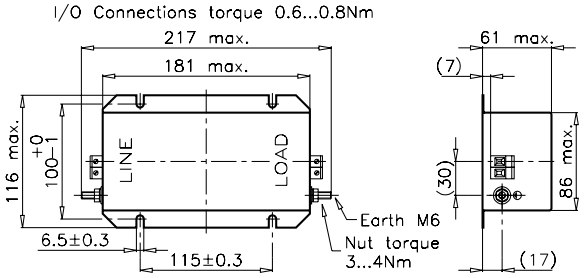

Case 31-6

