SG22PA300

SURGE PROTECTION DEVICE TYPE 2 WITH PLUG-IN CARTRIDGE, RATED DISCHARGE CURRENT IN (8/20MS) 20KA PER POLE, 2P



Product designation			Surge protection device (SPD)
Product type designation			SG2
Operating voltage type			AC
Application			AC Power lines
Number of poles			2P
Number of DIN modules			2
SPD according to IEC/EN 61643-11			YES
Electrical features			
IEC Maximum continuous voltage Uc		V	300
IEC Maximum discharge current Imax 8/20 (L-N/N-PE)		kA	50
IEC Rated discharge current (IEC) In 8/20 (L-N/N-PE)		kA	20
IEC Voltage protection level Up (L-N/N-PE)		kV	<1.5
Temporary overvoltage (TOV) resistance Ut (L-N for 5s)		V	337
IEC Follow current If (N-PE) rms		A	No
Tripping time ta (L-N/N-PE)		ns	<25
Thermal insulation protection			YES
IEC Backup protection fuse with supply fuse >315A (L-N/N-PE)		Class/A	315A / 250A Gg
IEC Maximum short circuit current at 50Hz		kA	25 / 50
Status indicator - operating / end of life			Frontal indication
Ambient conditions			
Operating temperature			
	min	°C	-40
	max	°C	85
Max altitude		m	2000
Mechanical features			
Fixing			DIN rail
Conductor section Flexible max (IEC)		mm²	25
Conductor section Rigid max (IEC)		mm²	35
Weight		g	252
Relay output for remote status indication			
Rated current at			
	48V DC	A	0.5

Dimensions

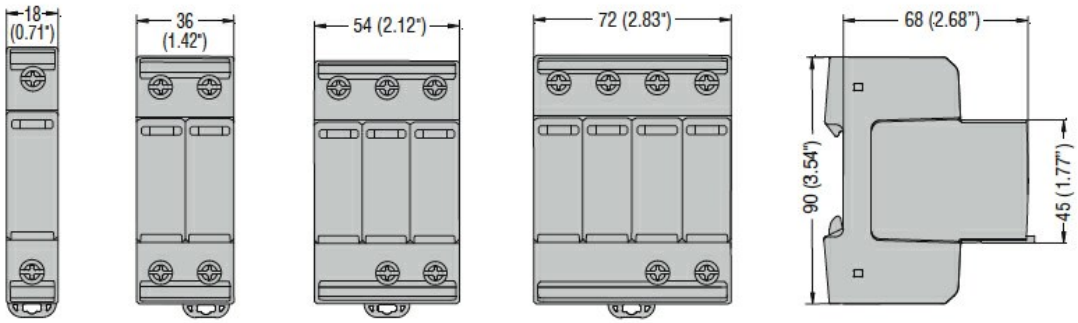

Wiring diagrams

The characteristics described in this document are subject to updates or modifications at any time. The descriptions, technical and functional information, illustrations and instructions in this brochure are purely illustrative, and are consequently not contractually binding

SG22PA300

SURGE PROTECTION DEVICE TYPE 2 WITH PLUG-IN CARTRIDGE, RATED DISCHARGE CURRENT IN (8/20MS) 20KA PER POLE, 2P

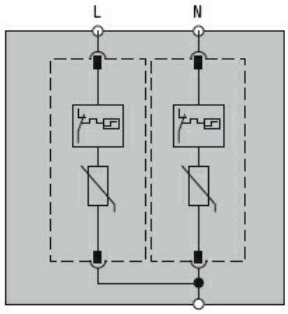

Certifications and compliance

Compliance

IEC/EN 61643-11

Certificates

EAC

The characteristics described in this document are subject to updates or modifications at any time. The descriptions, technical and functional information, illustrations and instructions in this brochure are purely illustrative, and are consequently not contractually binding