# IG0349

## Inductive sensor

IGB2005-BBOA/SL/LS-100AK/RT

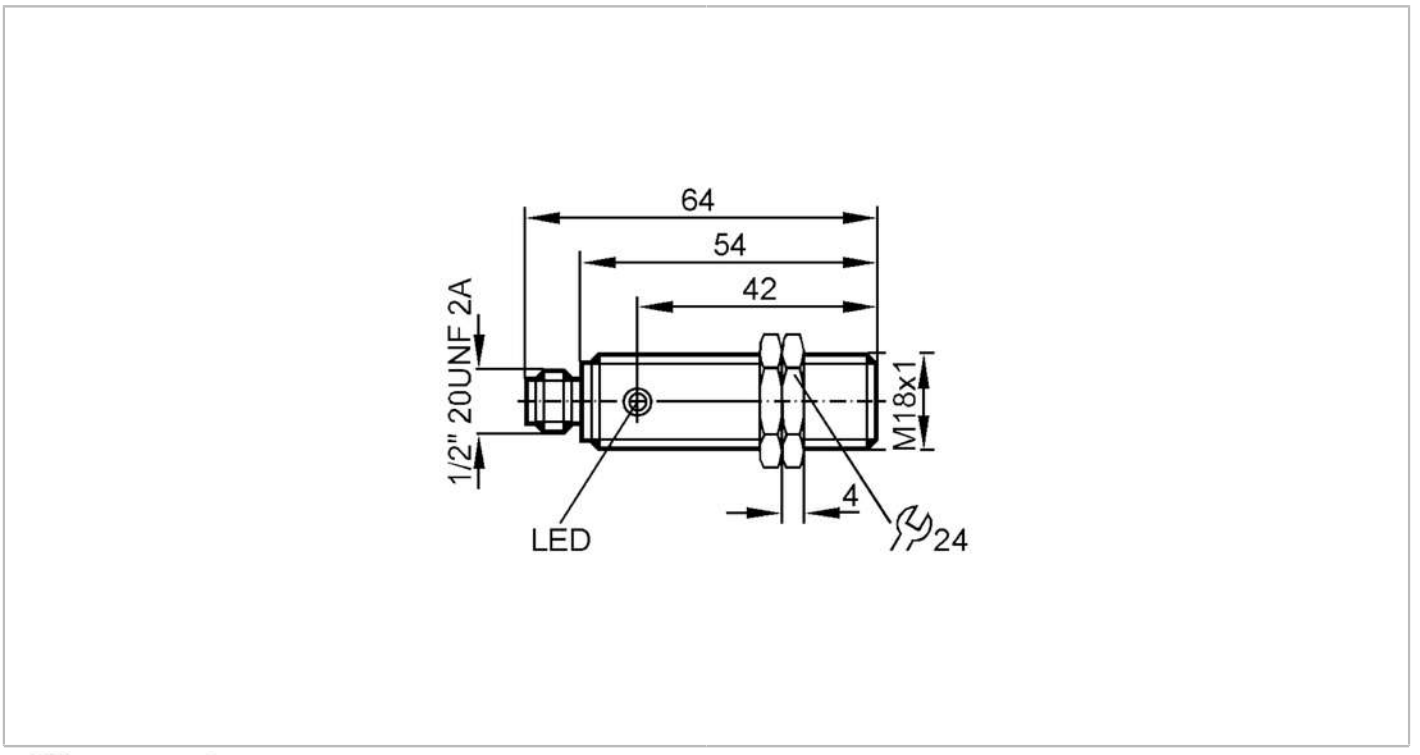


| | | |
|---|---|---|
| **Product characteristics** | | |
| Output function | | normally closed |
| Sensing range | [mm] | 5 |
| Housing | | threaded type |
| Dimensions | [mm] | M18 x 1 |
| **Electrical data** | | |
| Operating voltage | [V] | 20...250 AC/DC |
| Protection class | | I |
| Reverse polarity protection | | no |
| **Outputs** | | |
| Output function | | normally closed |
| Max. voltage drop switching output DC | [V] | 6 |
| Max. voltage drop switching output AC | [V] | 6.5 |
| Minimum load current | [mA] | 5 |
| Max. leakage current | [mA] | 2.5 (250 V AC) / 1.3 (110 V AC) / 0.8 (24 V DC) |
| Permanent current rating of switching output AC | [mA] | 250;  (350 (...50 °C)) |
| Permanent current rating of switching output DC | [mA] | 100 |
| Short-time current rating of switching output | [mA] | 2200;  (20 ms / 0,5 Hz) |
| Switching frequency AC | [Hz] | 25 |
| Switching frequency DC | [Hz] | 100 |

# IG0349

## Inductive sensor

IGB2005-BBOA/SL/LS-100AK/RT

| | | | |
|---|---|---|---|
| Short-circuit proof | | | no |
| Overload protection | | | no |
| **Detection zone** | | | |
| Sensing range | [mm] | | 5 |
| Real sensing range Sr | [mm] | | 5 ± 10 % |
| Operating distance | [mm] | | 0...4.05 |
| **Accuracy / deviations** | | | |
| Correction factor | | | steel: 1 / stainless steel: 0.7 / brass: 0.5 / aluminium: 0.4 / copper: 0.3 |
| Hysteresis | [% of Sr] | | 3...15 |
| Switch point drift | [% of Sr] | | -10...10 |
| **Operating conditions** | | | |
| Ambient temperature | [°C] | | -25...80 |
| Protection | | | IP 67 |
| **Tests / approvals** | | | |
| EMC | | EN 60947-5-2 | |
| | | EN 55011 | class B |
| MTTF | [years] | | 609 |
| UL approval | | Ta | 0...40 °C |
| | | Enclosure type | Type 1 |
| | | power supply | Hazardous voltage |
| | | File number UL | E174191 |
| **Mechanical data** | | | |
| Weight | [g] | | 63 |
| Housing | | | threaded type |
| Mounting | | | flush mountable |
| Dimensions | [mm] | | M18 x 1 |
| Thread designation | | | M18 x 1 |
| Materials | | | brass white bronze coated; PC |
| **Displays / operating elements** | | | |
| Display | | switching status | 1 x LED, red |
| **Electrical connection** | | | |
| Required protection | | | miniature fuse to IEC60127-2 sheet 1; ≤ 2 A; fast acting |
| **Accessories** | | | |
| Items supplied | | | lock nuts: 2 |
| **Remarks** | | | |
| Remarks | | | Recommendation: Check the safe functioning of the unit after a short circuit. |
| Pack quantity | | | 1 pcs. |

# IG0349

## Inductive sensor

**IGB2005-BBOA/SL/LS-100AK/RT**

## Electrical connection - plug

Connector: 1 x 1/2"; coding: C

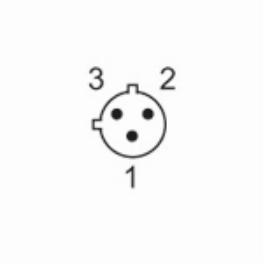


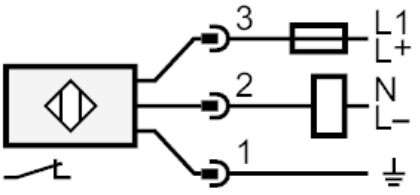


Note miniature fuse to IEC60127-2 sheet 1 ≤ 2 A fast acting