Belt sander - 10 x 330 mm



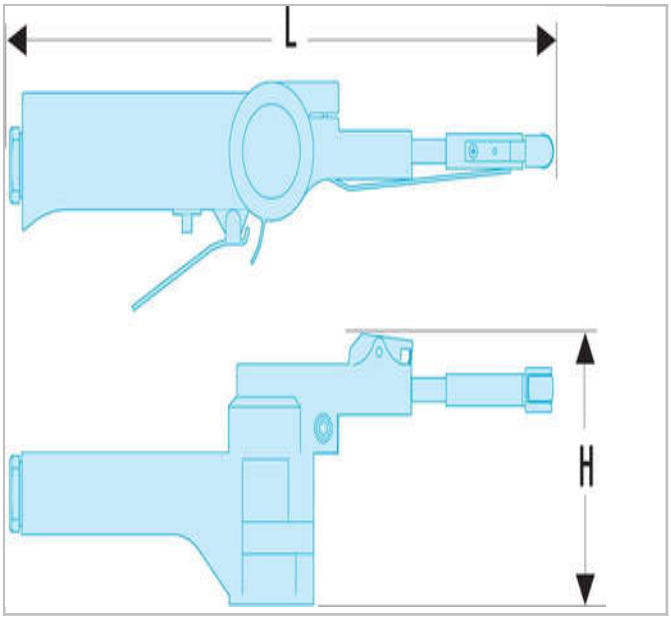

Description:

● Handle rotates enabling the operator to always have the best grip.
● Easy and fast changing of belts with the quick change arm.
● Feather teasing trigger for great control.
● Starter pack with tool delivered with 3 abrasives: 2 x P120 and 1 x P80.
● Long and Narrow 10 mm arm to get in the most confined spaces.

© FACOM 2020

	Height H [mm]	Length L [mm]	Vibration Level [m/s2]	Maximum Speed [rpm]	Weight [Kg]
V.402F	83.0	283.0	<2,5 (K=0,63)	16000.0	16000.0

© FACOM 2020