

3606 3606

EQUAL TUBE TO TUBE CONNECTOR

maximum working pressure	bar	MPa	psi
	20	2,0	290

working temperature	°C (Celsius)	F (Farenheit)	K (Kelvin)
	From -20 to 120	From -4 to 248	From 253 to 393

body	nickel-plated brass
'O'-rings	Fluoroelastomer FKM (FPM)

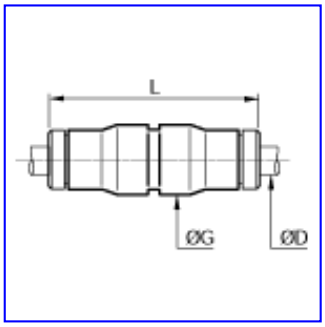

3606 3606

EQUAL TUBE TO TUBE CONNECTOR

for metric tubing

Part No	ØD (mm)	ØG (mm)	L (mm)	(kg)
3606 04 00	4	10,0	30,5	0,009
3606 06 00	6	12,0	36,5	0,016
3606 08 00	8	15,0	37,5	0,020
3606 10 00	10	17,5	47,5	0,033
3606 12 00	12	19,5	50,0	0,042
3606 14 00	14	21,5	52,5	0,049