Design / LED Double Flash/Multi-Tone Sounder 444

LED Flash/Sounder BWM 32 tne 230VAC RD



Part No.: 444.100.68

MECHANICAL DATA	
Length	112 mm
Width	109 mm
Height	150 mm
Materials	PC PC/ABS
Dome colour	Red
Housing colour	Black
Protection category	IP65
Connection	Spring-type terminal
cross-sectional area maximum	2,50mm² / 14AWG
Cable entry	Membrane grommet
Cable entry minimum	d = 1 mm
Cable entry maximum	d = 13 mm
Type of fixing	Base mounting Wall mounting
Working temperature minimum	-30°C
Working temperature maximum	+50°C
Weight with packaging	540 g
Product weight	470 g

ELECTRICAL DATA	
Operating voltage	230V
Operating voltage type	AC
Operating voltage frequency	50Hz
Operating voltage tolerance	+/- 10%
Rated operational voltage	230 VAC
Rated operational current	60 mA
Rated inrush current	500 mA
Protection class	Protection class 2
Pollution degree	3
Overvoltage category	II
Isolation voltage	Ui = 250V; Uimp = 2.500V

OPTICAL DATA	
Light source	LED
Light colour	Red
Optical signal image	Flash
Flash frequency	1 Hz
Flash output	2 J

! For additional installation and mounting information, refer to the appropriate user guide at www.werma.com. This printed copy is for information only and is subject to alteration.

Design / LED Double Flash/Multi-Tone Sounder 444

LED Flash/Sounder BWM 32 tne 230VAC RD

Service life optical	50,000 h maximum
ACUSTICAL DATA	
Volume (max) at 1m distance	114,0 dB (A)
Acoustic signal image	Multi-tone
Number of tones	32 tone
Acoustic service life	5,000 h minimum
APPROVAL DATA	
Conforms with CE	Yes
WEEE	Yes
Conforms with ATEX-directive	No
Conforms with CCC	Yes
Conforms with UL	No
Conforms with FCC	No
Conforms with IC	No
EAC certificate available	Yes
Conforms with UKCA (Importer)	Yes (WERMA (UK) Ltd.)
Conforms with AS-I	No
ICAO Certification	No
Conforms with DNV	No
Conforms with RoHS CN	No
Conforms with VdS	No

! For additional installation and mounting information, refer to the appropriate user guide at www.werma.com. This printed copy is for information only and is subject to alteration.

Design / LED Double Flash/Multi-Tone Sounder 444

LED Flash/Sounder BWM 32 tne 230VAC RD

DRAWING

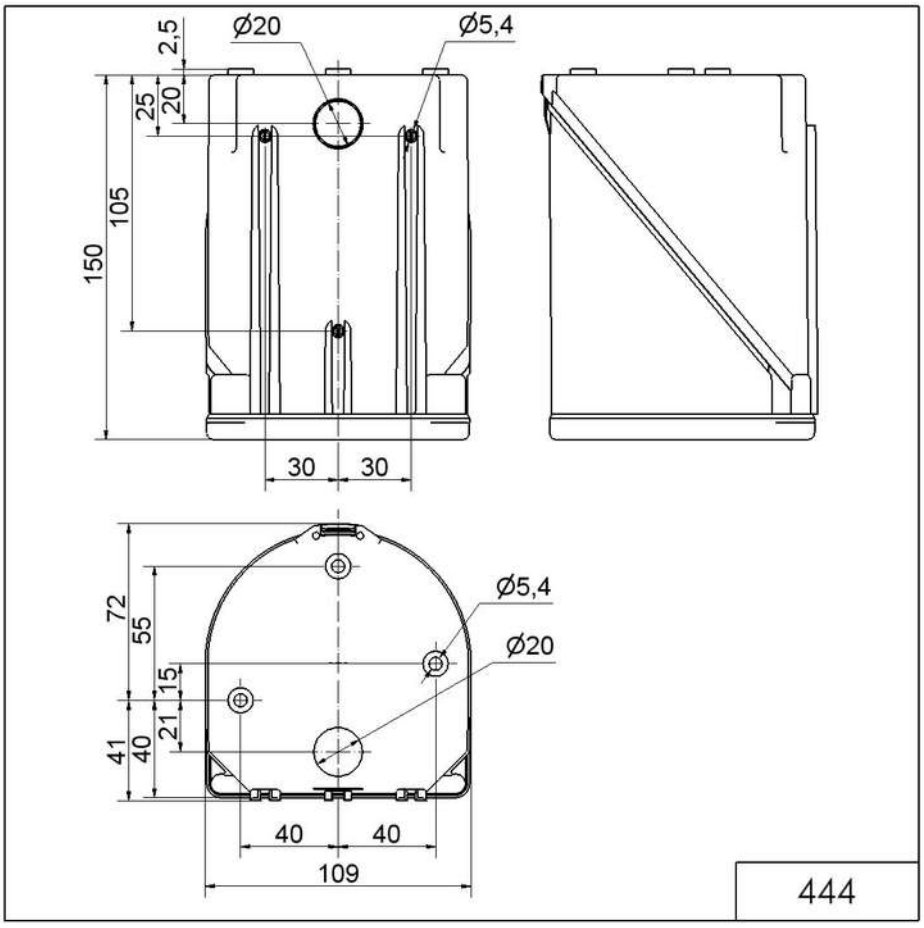

! For additional installation and mounting information, refer to the appropriate user guide at www.werma.com. This printed copy is for information only and is subject to alteration.