

Model Number

DK12-11/124/136

Print mark contrast sensor
with M12, 5-pin metal connector

Features

- Diffuse mode sensor for recording any print mark
- TEACH-IN, static and dynamic
- 50 µs response time, suitable for extremely rapid scanning processes
- 3 emitter colors: green, red and blue

Dimensions

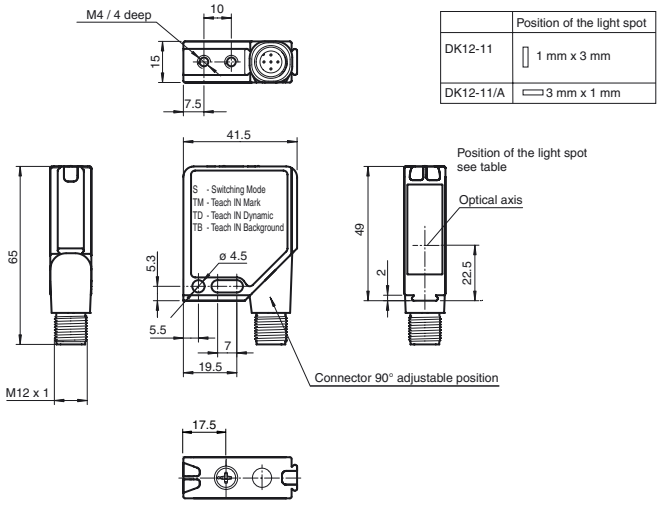

	Position of the light spot
DK12-11	1 mm x 3 mm
DK12-11/A	3 mm x 1 mm

Electrical connection

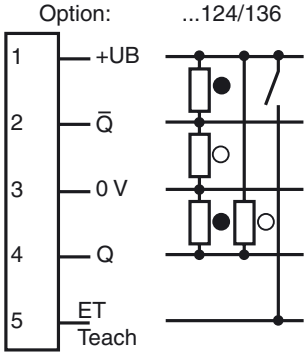

○ = Backround
● = Mark

Pinout

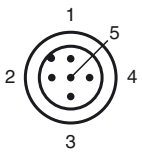

Indicators/operating means

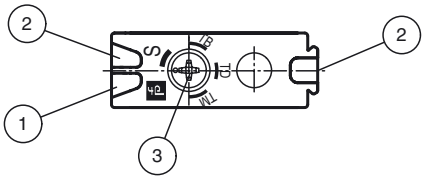

1	Operating display green
2	Switch state yellow
3	Teach-In switch

Release date: 2013-09-24 10:07 Date of issue: 2013-10-15 132616_eng.xml

Technical data

General specifications		
Sensor range		11 mm ± 2 mm
Light source		3 LEDs (R,G,B)
Light type		Visible green/red/blue, modulated light
Light spot representation		1 mm x 3 mm , light spot parallel to housing
Angle deviation		max. ± 3°
Teach-In		static and dynamic Teach-In
Functional safety related parameters		
$MTTF_d$		750 a
Mission Time (T_M)		20 a
Diagnostic Coverage (DC)		60 %
Indicators/operating means		
Operation indicator		LED green, statically lit Power on , short-circuit : LED green flashing (approx. 4 Hz)
Function indicator		2 LEDs yellow, light up in case of detection
Teach-In indicator		Teach-In mark: LED green/yellow equiphase flashing; 2,5 Hz . Teach-In background: LED green/yellow non equiphase flashing; 2,5 Hz . Teach-In dynamic: LED green/yellow equiphase flashing; 1.0 Hz . Teach Error:LED green/yellow non equiphase flashing; 8.0 Hz .
Control elements		Teach-In rotary switch for Switching operation, Teach-In mark, Teach-In background and dynamic Teach-In
Electrical specifications		
Operating voltage	U_B	10 ... 30 V DC
Ripple		10 %
No-load supply current	I_0	≤ 80 mA
Input		
Function input		Ext. Teach-In input (ET)
Output		
Switching type		light/dark on
Signal output		2 push-pull (4 in 1) outputs, complementary, short-circuit proof, reverse polarity protected
Switching voltage		max. 30 V DC
Switching current		max. 100 mA
Switching frequency	f	10 kHz
Response time		50 µs
Ambient conditions		
Ambient temperature		-20 ... 60 °C (-4 ... 140 °F)
Storage temperature		-40 ... 75 °C (-40 ... 167 °F)
Mechanical specifications		
Protection degree		IP67
Connection		Metal connector, M12, 5-pin, 90° rotatable
Material		
Housing		Frame: nickel plated, die cast zinc, Laterals: glass-fiber reinforced plastic PC
Optical face		Plastic pane
Mass		60 g
Compliance with standards and directives		
Standard conformity		
Product standard		EN 60947-5-2:2007 IEC 60947-5-2:2007
Approvals and certificates		
Protection class		II, rated voltage ≤ 250 V AC with pollution degree 1-2 according to IEC 60664-1
UL approval		cULus Listed , Class 2 power source
CCC approval		CCC approval / marking not required for products rated ≤36 V

Release date: 2013-09-24 10:07 Date of issue: 2013-10-15 132616_eng.xml

Refer to "General Notes Relating to Pepperl+Fuchs Product Information".
Pepperl+Fuchs Group www.pepperl-fuchs.com
USA: +1 330 486 0001 fa-info@us.pepperl-fuchs.com
Germany: +49 621 776 4411 fa-info@de.pepperl-fuchs.com
Singapore: +65 6779 9091 fa-info@sg.pepperl-fuchs.com
PEPPERL+FUCHS SENSING YOUR NEEDS

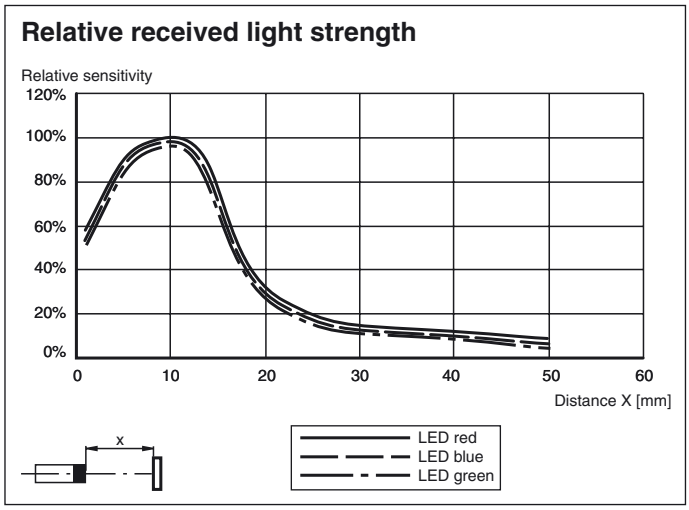

Curves/Diagrams

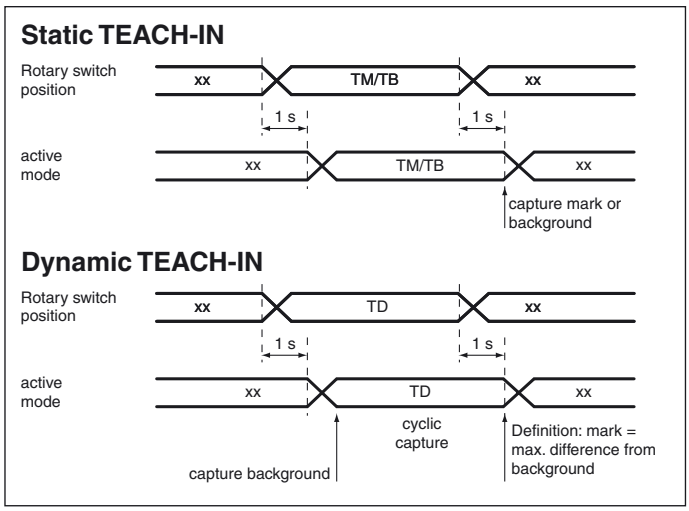

Adjustment

In the case of reflecting or shiny object surfaces, the sensor must be tilted by approx. 10° against the material surface.

Teach-In via rotary switch

Teach-In via rotary switch in four settings: Switch mode, Teach-In Mark, Teach-In Background and Dynamical Teach-In.

A change of the switch setting needs to pass a 1 second time lock. That means that the switch must be for at least 1 second in the new position before the sensor accepts the required mode (indicated by the flashing sequence of the indication LEDs).

Statical Teach-In

Statical Teach-In mode (TM/TB) allows the teach of mark and background at the same time (one after the other but independently of the order) or separately. There is no need to teach always both mark and background.

Setting TM (Teach-In Mark)

Teach-In starts with a continuous value capturing. The object's colour may change. When the switch position changes, the last captured value will be saved as the marks value. During the "Teach-In Mark" mode, the green and the yellow LEDs are flashing simultaneously (f = 2.5 Hz).

Setting TB (Teach-In Background)

Same function as described above (TM setting).
During the "Teach-In Background" mode the green and the yellow LEDs are flashing alternating (f = 2.5 Hz).

Dynamical Teach-In

Setting TD (Teach-In Dynamic)

The Teach-In procedure starts and a continuous value capturing is carried out. The first captured signals after entering the "Dynamical Teach-In" mode are interpreted by the sensor as the background. The maximum signal variation during the entire "Teach-In Dynamic" mode will be interpreted as the print mark.

Release date: 2013-09-24 10:07 Date of issue: 2013-10-15 132616_eng.xml

During the "Teach-In Dynamic" mode the green and the yellow LEDs are flashing simultaneously (f = 1.0 Hz).

Switch mode (normal operation)

Setting S (Switching Mode)

This switch setting terminates the actual Teach-In mode. Signal evaluation for each of the 3 emitter colours for both mark and background is now performed.

a.) Teach-In successfully finished --> switch mode:
Selection of the most suitable emitter colour for the evaluated contrast.
The switching level is set to the centre between mark and background signal.
The switching outputs Q1/PNP and Q2/NPN are activated when the teached mark is detected.

b.) Alarm function:
In case of too weak contrast for all 3 emitter colours, all emitters will be deactivated. The yellow and the green LEDs are flashing alternating with a frequency of approx. 8.0 Hz. The sensor returns to the switch mode (normal operation) after 7 seconds without changing the saved values.

External Teach-In input

The desired operating mode is set in switch position S by connecting a high pulse of a certain width:

Teach-In Dynamic (TD)	420 ms ... 450 ms
Teach-In Background (TB)	320 ms … 350 ms
Teach-In Mark (TM)	220 ms ... 250 ms
Switching Mode (S)	120 ms … 150 ms

The description of the individual operating modes corresponds to the Teach-In via rotary switch.

During the external Teach-In the function of the rotary switch is deactivated.

An external Teach-In procedure must be completed with a signal for requesting the Switching Mode (S).

Release date: 2013-09-24 10:07 Date of issue: 2013-10-15 132616_eng.xml

Refer to “General Notes Relating to Pepperl+Fuchs Product Information”.
Pepperl+Fuchs Group www.pepperl-fuchs.com
USA: +1 330 486 0001 fa-info@us.pepperl-fuchs.com
Germany: +49 621 776 4411 fa-info@de.pepperl-fuchs.com
Singapore: +65 6779 9091 fa-info@sg.pepperl-fuchs.com
PEPPERL+FUCHS SENSING YOUR NEEDS