Tapered roller bearings, single row

Principal dimensions			Basic load ratings		Speed ratings		Designation
			dynamic	static	Reference speed	Limiting speed	
d	D	T	C	C0			* SKF Explorer bearing
mm			kN		r/min		-
38,1	65,088	18,034	42,9	57	7500	11000	LM 29749/710/QCL7CVA60

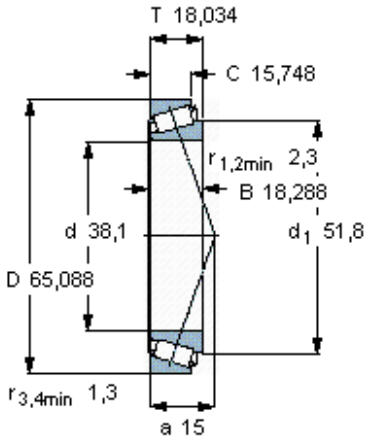

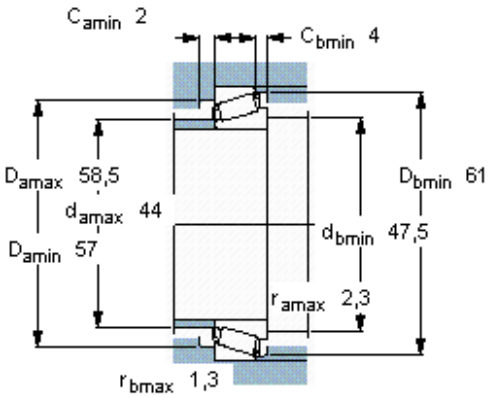

Calculation factors

e 0,33

Y 1,8

Y_0 1