FY 55 TF

Compliance with standard	ISO
Housing material	Cast iron
Sealing solution	Standard seals with additional flingers

Dimensions

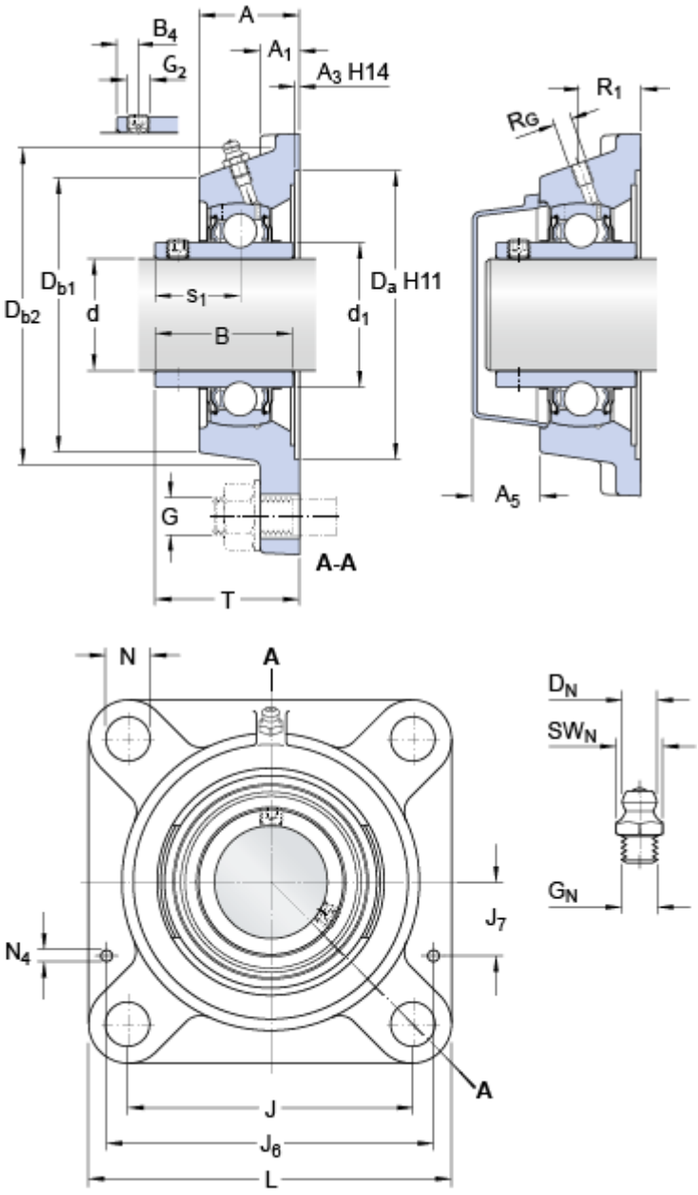

d		55	mm
d_1	≈	69.06	mm
A		47.5	mm
A_1		16	mm
A_3		3.2	mm
A_5		37.5	mm
B		55.6	mm
B_4		9	mm
D_a		150.8	mm
D_{b1}		122	mm
D_{b2}		134	mm
J		130	mm
L		162	mm
N		18	mm
s_1		33.4	mm
T		64.4	mm

Grease fitting

D_N	6.5	mm
SW_N	7	mm
G_N	1/4-28 SAE-LT	

Threaded hole

R_G	1/4-28 UNF	
R_1	32	mm

Dowel pins

	J_6	148	mm
	J_7	45	mm
	N_4	4	mm

Calculation data

Basic dynamic load rating	C	43.6	kN
Basic static load rating	C_0	29	kN
Fatigue load limit	P_u	1.25	kN
Limiting speed		3600	r/min
with shaft tolerance h6			

Mass

Mass bearing unit		3.2	kg

Mounting information

Thread grub screw	G_2	M10x1	
Hexagonal key size for grub screw	N	5	mm
Recommended tightening torque for grub screw		16.5	N·m
Recommended diameter for attachment bolts, mm	G	16	mm
Recommended diameter for attachment bolts, inch	G	0.625	in

Included products

Housing	FY 511 M
Bearing	YAR 211-2F

Associated products

End cover	ECY 211