RULAND MANUFACTURING COMPANY, INC.
EST. 1937

MSPC



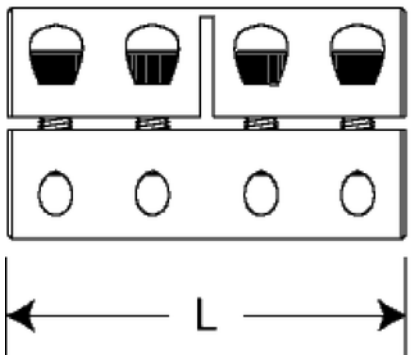

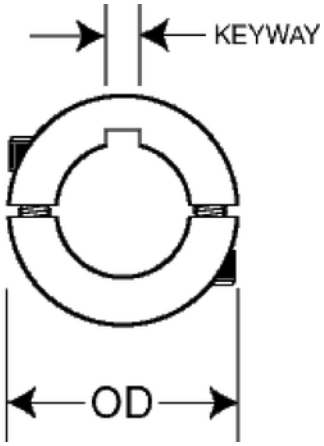

- 3-piece styles available
- Precision honed bore on straight bore couplings
- Does not mar the shaft
- NYPATCH® Anti-vibration hardware
- Additional Step Bores available
- Bore tolerance: +.051mm - .000mm
- Opposing hardware on 2-piece styles

PART NUMBER STEEL	PART NUMBER STAINLESS STEEL	BORE B1 (mm)	BORE B2 (mm)	OD (mm)	LENGTH L (mm)	KEYWAY K1 (mm)	KEYWAY K2 (mm)	FORGED CLAMP SCREW
MSPC-6-6-F	MSPC-6-6-SS	6	6	18	30	2X2	2X2	M3X8
MSPC-8-7-F	MSPC-8-7-SS	8	7	24	35	2X2	2X2	M3X10
MSPC-8-8-F	MSPC-8-8-SS	8	8	24	35	2X2	2X2	M3X10
MSPC-9-9-F	MSPC-9-9-SS	9	9	24	35	3X3	3X3	M3X10
MSPC-10-9-F	MSPC-10-9-SS	10	9	29	45	3X3	3X3	M4X12
MSPC-10-10-F	MSPC-10-10-SS	10	10	29	45	3X3	3X3	M4X12
MSPC-12-9-F	MSPC-12-9-SS	12	9	29	45	4X4	3X3	M4X12
MSPC-12-12-F	MSPC-12-12-SS	12	12	29	45	4X4	4X4	M4X12
MSPC-14-12-F	MSPC-14-12-SS	14	12	34	50	5X5	4X4	M5X16
MSPC-14-14-F	MSPC-14-14-SS	14	14	34	50	5X5	5X5	M5X16
MSPC-15-14-F	MSPC-15-14-SS	15	14	34	50	5X5	5X5	M5X16
MSPC-15-15-F	MSPC-15-15-SS	15	15	34	50	5X5	5X5	M5X16
MSPC-16-16-F	MSPC-16-16-SS	16	16	34	50	5X5	5X5	M5X16
MSPC-20-19-F	MSPC-20-19-SS	20	19	42	65	6X6	6X6	M6X16
MSPC-20-20-F	MSPC-20-20-SS	20	20	42	65	6X6	6X6	M6X16
MSPC-25-24-F	MSPC-25-24-SS	25	24	45	75	8X7	8X7	M6X16
MSPC-25-25-F	MSPC-25-25-SS	25	25	45	75	8X7	8X7	M6X16
MSPC-30-28-F	MSPC-30-28-SS	30	28	53	83	8X7	8X7	M6X18

MSPC-30-30-F	**MSPC-30-30-SS**	**30**	**30**	**53**	**83**	**8X7**	**8X7**	**M6X18**
MSPC-35-35-F	**MSPC-35-35-SS**	**35**	**35**	**67**	**95**	**10X8**	**10X8**	**M8X25**
MSPC-40-40-F	**MSPC-40-40-SS**	**40**	**40**	**77**	**108**	**12X8**	**12X8**	**M8X25**
MSPC-50-50-F	**MSPC-50-50-SS**	**50**	**50**	**85**	**124**	**14X9**	**14X9**	**M10X25**