E12232

Mounting adapter for tie-rod/integrated profile cylinders

ADAPT TIE ROD/PROFILE

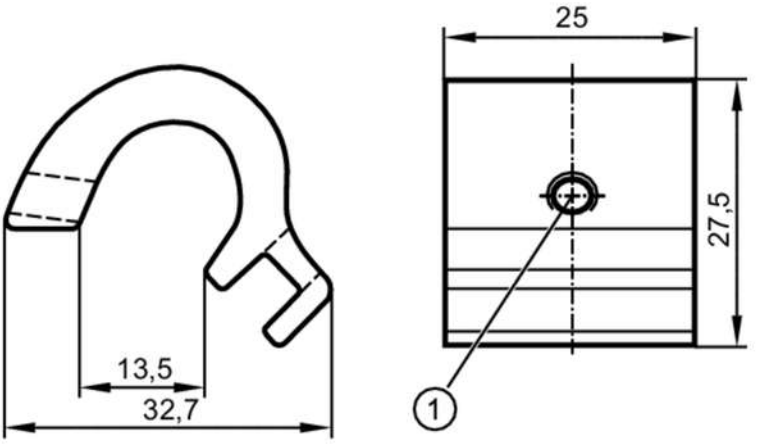

1 Mounting screw SW 2

Application		
Design		for types MKT, for types MKT
Mechanical data		
Weight	[g]	20.2
Materials		Adapter: aluminium; screw: stainless steel
Tightening torque	[Nm]	0.5
Clamping range	[mm]	9...13.5
Remarks		
Pack quantity		1 pcs.