CONSOLE CS
CS BRACKET

GS
PG

legrand® | CABLE MANAGEMENT

FT0160-0	03 / 16

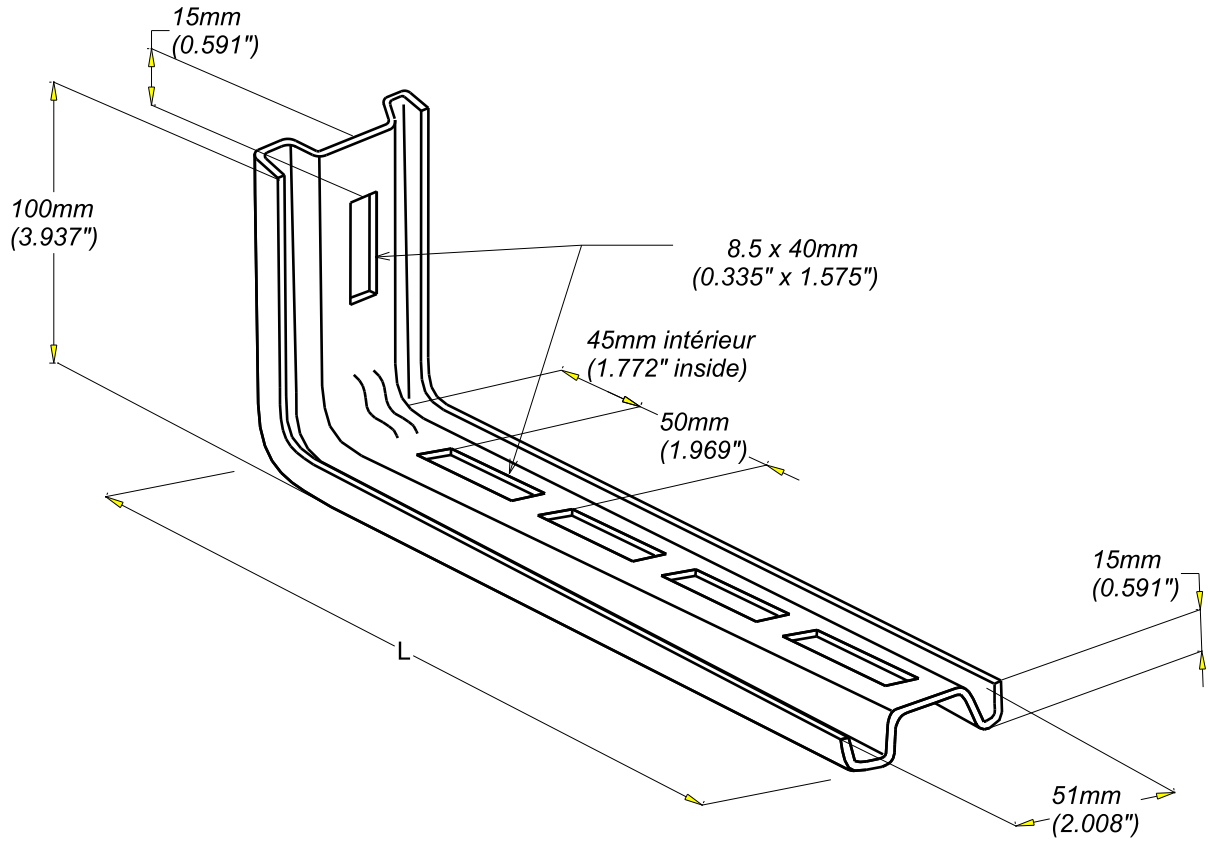

REF	CODE	POIDS (Kg)	/ *WEIGHT* (lb)	L (mm)	/ *L* (inch)	Ep. (mm)	/ *Th.* (inch)
CS 100	002 700	0.188	*0.415*	170	*6.69*	1.5	*0.06*
CS 200	002 710	0.346	*0.763*	260	*10.24*	2	*0.08*
CS 300	002 720	0.560	*1.235*	360	*14.17*	2.5	*0.1*

	NORME / *STANDARD*
MATIERE / *MATERIAL*	
DX51 D Z275 MAC	EN 10346
PROTECTION / *COATING*	
GS / *PG*	

Propriété exclusive de LEGRAND, ne peut être ni copié, ni transmis à des tiers sans autorisation écrite.
Exclusive property of LEGRAND, shouldn't be reproduced or transmitted to any people without written authorization.