lumbergautomation
A BELDEN BRAND



Product: RKWU 12-256

M23 Power Single-Ended Cordset: Female, angled, 12-pin, black body, 120 V AC/DC, 8 A; PUR black cable, 8x0.5 mm² + 3x1.0 mm²

Product Description

M23 Power Single-Ended Cordset: Female, angled, 12-pin, black body, 120 V AC/DC, 8 A; PUR black cable, 8x0.5 mm² + 3x1.0 mm²

Technical Drawing

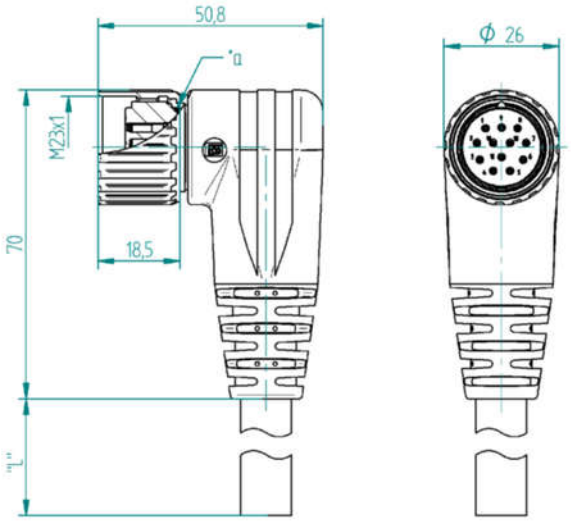

Typ/ *type*	Kontaktbelegung/ *contact assignment*	
	Polzahl/ *number of poles*	Farbkennung/ *color code*
RKWU	12	1 = weiß / white 2 = grün / green 3 = gelb / yellow 4 = grau / grey 5 = grau-rosa / *grey-pink* 6 = rot-blau / *red-blue* 7 = weiß-grün / white-green 8 = braun-grün / *brown-green* 9 = blau / blue ┐ Brücke / bridge 10 = blau / blue ┘ 11 = braun / *brown* 12 = gelb / grün / yellow / green

Legende/ cutlinde
*a O-Ring/ *o-ring*
"L" Standardlänge der Steuerleitung/ *standard length of cable*

Technical Specifications

Technical Data

Product Family:	Power Connector
Product Sub Family:	M23 Power
Brand:	Lumberg Automation
Connector Type:	Cordset, single ended
Type of Contact / Gender:	female
Connector Design:	angled
Number of Pins:	12
Shielding:	Unshielded
Attachment Type:	Coupling Nut
Rated Voltage:	125 V
Rated Impulse Voltage:	1.5 kV
Operating Voltage:	120 V AC/DC
Rated Current:	8 A
Insulation Resistance:	> 10^9 Ohm
Mating Cycles:	≤ 100
Ambient Temperature (Operation):	-25°C to +80°C
Protection Degree / IP Rating:	IP67
Pollution Degree:	3 acc. to DIN EN 60664-1 (VDE 0110-1)
Clearance / Creepage Distance:	acc. to DIN EN 60664-1 (VDE 0110-1)
Overvoltage Category:	II acc. to DIN EN 60664-1 (VDE 0110-1)

Materials

Contact Base Material:	8 x CuSn/4 x CuZn
Contact Plating:	Cu/Au
Contact Bearer Material:	PA 66
Contact Bearer Color:	black
Flammability Class (Contact Bearer):	UL 94-HB
Molded Body Material:	TPU
Molded Body Color:	black
Flammability Class (Molded Body):	UL 94-HB
Attachment Material:	CuZn, nickel-plated
O-Ring Material:	FKM

Cable Data

Cable Number:	256
Number of Wires:	11
Minimal Bending Radius (Fixed Inst):	> 5 x D
Minimal Bending Radius (Flexible Inst):	> 10 x D
Cycles (Bending):	> 2 M
Conductor material:	Cu
Cable Jacket Material:	PUR
Cable Jacket Color:	black
Cable Diameter D:	Ø 9.30 ±0.20 mm
Wire Insulation Material:	PP
Insulated Wire Diameter:	8x Ø1.45 mm + 3x Ø1.95 mm
Ambient Temperature (Fixed Installation):	-50°C to +80°C
Ambient Temperature (Flex Installation):	-25°C to +80°C
Ambient Temperature (Drag Chain Inst):	-25°C to +60°C
UL Cable Type:	AWM: 20549
Flammability Class (Cable Jacket):	DIN EN 60332-2-2, VDE 0482-332-2-2, IEC 60332-2-2, CSA FT-2; flame-retardant

Safety & Environmental Compliance

RoHS Compliant:	yes

Resistances

Halogenfree:	DIN EN 50267-2-1, IEC 60754-1, VDE 0482-267-2-1

Notes

Protection Degree / IP Rating Note:	* only if mounted and locked in combination with Hirschmann / Lumberg connector.
Note Derating:	* Notice derating
Note:	Do not connect / disconnect under load.
Particularities:	When the connector is unlocked and in risk of pollution the connector has to be covered with a protective cap ≥ IP54.

Variants

Item #	Item Description	Cable Length
83967	RKWU 12-256/2 M	2 m
60692	RKWU 12-256/5 M	5 m
60689	RKWU 12-256/10 M	10 m
27345	RKWU 12-256/15 M	15 m
60691	RKWU 12-256/20 M	20 m
61144	RKWU 12-256/25 M	25 m
61145	RKWU 12-256/30 M	30 m
106928	RKWU 12-256/35 M	35 m
73331	RKWU 12-256/40 M	40 m
9401	RKWU 12-256/45 M	45 m
934636549	RKWU 12-256/50 M	50 m
16862	RKWU 12-256/55 M	55 m
104392	RKWU 12-256/60 M	60 m
6304	RKWU 12-256/65 M	65 m
17581	RKWU 12-256/70 M	70 m
15934	RKWU 12-256/80 M	80 m
15935	RKWU 12-256/90 M	90 m

© 2019 Belden, Inc

All Rights Reserved.

Although Belden makes every reasonable effort to ensure their accuracy at the time of this publication, information and specifications described here in are subject to error or omission and to change without notice, and the listing of such information and specifications does not ensure product availability.

Belden provides the information and specifications herein on an "ASIS" basis, with no representations or warranties, whether express, statutory or implied. In no event will Belden be liable for any damages (including consequential, indirect, incidental, special, punitive, or exemplary damages) whatsoever, even if Belden has been advised of the possibility of such damages, whether in an action under contract, negligence or any other theory, arising out of or in connection with the use, or inability to use, the information or specifications described herein.

All sales of Belden products are subject to Belden's standard terms and conditions of sale.

Belden believes this product to be in compliance with all applicable environmental programs as listed in the data sheet. The information provided is correct to the best of Belden's knowledge, information and belief at the date of its publication. This information is designed only as a general guide for the safe handling, storage, and any other operation of the product itself or the one that it becomes a part of. The Product Disclosure is not to be considered a warranty or quality specification. Regulatory information is for guidance purposes only. Product users are responsible for determining the applicability of legislation and regulations based on their individual usage of the product.