DATASHEET - EASY-E4-UC-12RCX1



Control relays, easyE4 (expandable, Ethernet), 12/24 V DC, 24 V AC, Inputs Digital: 8, of which can be used as analog: 4, Outputs Digital: 4 relais, screw terminal

Powering Business Worldwide

Part no.	**EASY-E4-UC-12RCX1**
Catalog No.	**197212**
EL-Nummer (Norway)	**4500547**

Delivery program

Basic function			easyE4 basic device
Description			Electronic control relay with diagnostic LEDs with Ethernet interface Expandable with the easyE4 series of digital input/output expansions with easy-E4-CONNECT1 connector (Item Y7-197225) Rated operating voltage 12V DC, 24V DC or 24V AC 8 digital inputs, No. of these can be used as analog inputs - 4 Digital outputs: 4 relays Screw terminals Delivery with customized user program is possible via Item (Y7) -2010781 EASY-COMBINATION
Inputs			
Digital			8
of which can be used as analog			4
Additional features			
Real time clock			#
Expansions			Expandable networkable (Ethernet)
Supply voltage			12/24 V DC 24 V AC
Software			EASYSOFT-SWLIC/easySoft 7

Technical data

General

Standards			EN 61000-6-2 EN 61000-6-3 IEC 60068-2-6 IEC 60068-2-27 IEC 60068-2-30 IEC 61131-2 EN 61010 EN 50178
Dimensions (W x H x D)		mm	71.5 x 90 x 58
Weight		kg	0.2
Mounting			Top-hat rail IEC/EN 60715, 35 mm or screw fixing using fixing brackets ZB4-101-GF1 (accessories)
Connection type			screw terminal
Ethernet			
Connections			RJ45 plug, 8-pin
Cable			CAT5

Terminal capacities

Screw terminals			
Solid		mm^2	0.2/4 (AWG 22 - 12)
Flexible with ferrule		mm^2	0.2 - 2.5
Standard screwdriver		mm	3.5 x 0.8
Max. tightening torque		Nm	0.6

Display

Status indicator (LED)			Power/RUN Ethernet

Climatic environmental conditions

Operating ambient temperature		°C	-25 to 55, cold as per IEC 60068-2-1, heat as per IEC 60068-2-2
Condensation			Take appropriate measures to prevent condensation

Storage	ϑ	°C	-40 - +70
relative humidity		%	in accordance with IEC 60068-2-30, IEC 60068-2-78 5 - 95
Air pressure (operation)		hPa	795 - 1080

Ambient conditions, mechanical

Protection type (IEC/EN 60529, EN50178, VBG 4)			IP20
Vibrations		Hz	In accordance with IEC 60068-2-6 constant amplitude 0.15 mm: 10 - 57 constant acceleration 2 g: 57 - 150
Mechanical shock resistance (IEC/EN 60068-2-27) semi-sinusoidal 15 g/11 ms		Impacts	18
Drop to IEC/EN 60068-2-31	Drop height	mm	50
Free fall, packaged (IEC/EN 60068-2-32)		m	0.3
Mounting position			Vertical or horizontal

Electromagnetic compatibility (EMC)

Overvoltage category/pollution degree			III/2
Electrostatic discharge (ESD)			
applied standard			according to IEC EN 61000-4-2
Air discharge		kV	8
Contact discharge		kV	6
Electromagnetic fields (RFI) to IEC EN 61000-4-3		V/m	0.8 - 1.0 GHz: 10 1.4 - 2 GHz: 3 2.0 - 2.7 GHz: 1
Radio interference suppression			EN 61000-6-3 Class B
Burst		kV	according to IEC/EN 61000-4-4 Supply cables: 2 Signal cables: 2
power pulses (Surge)			according to IEC/EN 61000-4-5 1 kV (supply cables, symmetrical) 2 kV (supply cables, asymmetrical)
Immunity to line-conducted interference to (IEC/EN 61000-4-6)		V	10

Insulation resistance

Clearance in air and creepage distances			nach EN 50178, EN 61010-2-201, UL61010-2-201, CSA-C22.2 NO. 61010-2-201
Insulation resistance			per EN 50178, EN 61010-2-201, UL61010-2-201, CSA-C22.2 NO. 61010-2-201

Back-up of real-time clock

Back-up of real-time clock			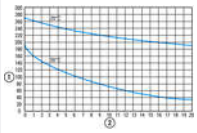
			① Backup time (hours) with fully charged double layer capacitor ② Service life (years)
Accuracy of real-time clock to inputs		s/day	typ. ± 2 (± 0.2 h/Year)
			depending on ambient air temperature fluctuations of up to ± 5 s/day (± 0.5 h/year) are possible

Repetition accuracy of timing relays

Accuracy of timing relays (of values)		%	± 0.02
Resolution			
Range “S”		ms	5
Range “M:S”		s	1
Range “H:M”		min	1

Power supply

Rated operational voltage	U_e	V	12/24 DC (-15/+20%) 24 AC (-15/+10%)
Permissible range	U_e		10.2 - 28.8 V DC 20.4 - 26.4 V AC
Residual ripple		%	≦ 5
Siemens MPI, (optional)			yes
Frequency		Hz	50/60 (± 5%)
Input current			max. 200 mA at 12 V DC max. 125 mA at 24 V DC
Voltage dips		ms	≤ 20 ms at 24 V AC 10 ms at 24 V DC 1 ms at 12 V DC
Fuse		A	≧ 1A (T)

Heat dissipation at 24 V DC		W	3

Digital inputs 12 V DC

Number			8
Potential isolation			from power supply: no to the memory card: no to Ethernet: yes between inputs: no from the outputs: yes to expansion devices: yes
Rated operational voltage	U_e	V DC	12
Input voltage		V DC	Condition 0: ≦ 5 (I1 - I8) Condition 1: ≧ 8 (I1 - I8)
Input current at signal 1		mA	1.75 mA (I1 - I4) 0.9 mA (I5 - I8)
Deceleration time		ms	20 (0 -> 1/1 -> 0, Debounce ON) type 0.015 (0 -> 1/1 -> 0, Debounce OFF)
Cable length		m	100 (unshielded)
Frequency counter			
Note			Notes on this, see under Digital inputs 24 V DC
Incremental counter			
Note			Notes on this, see under Digital inputs 24 V DC
Rapid counter inputs			
Note			Notes on this, see under Digital inputs 24 V DC

Digital inputs 24 V DC

Number			8
Inputs can be used as analog inputs			4 (I5, I6, I7, I8)
Potential isolation			from power supply: no to the memory card: no to Ethernet: yes between inputs: no from the outputs: yes to expansion devices: yes
Rated operational voltage	U_e	V DC	24
Input voltage		V DC	Signal 0: ≦ 5 (I1 - I8) Condition 1: ≧ 15 (I1 - I8)
Input current at signal 1		mA	3.3 (I1 – I4) 1.8 (I5 – I8)
Deceleration time		ms	20 (0 -> 1/1 -> 0, Debounce ON) type 0.015 (0 -> 1/1 -> 0, Debounce OFF)
Cable length		m	100 (unshielded)
Frequency counter			
Number			4 (I1, I2, I3, I4)
Counter frequency		kHz	≦ 10
Pulse shape			Square
Pulse pause ratio			1:1
Cable length		m	≦ 20 (screened)
Incremental counter			
Number of counter inputs			2 (I1 + I2, I3 + I4)
Value range			-2147483648 to +2147483647
Counter frequency		kHz	≦ 10
Pulse shape			Square
Signal offset			90°
Pulse pause ratio			1:1
Cable length		m	≦ 20 (screened)
Rapid counter inputs			
Number			4 (I1, I2, I3, I4)
Value range			-2147483648 to +2147483647
Counter frequency		kHz	≦ 10
Pulse shape			Square
Pulse pause ratio			1:1
Cable length		m	≦ 20 (screened)

Digital inputs 24 V AC

Number			8
Potential isolation			from power supply: no to the memory card: no to Ethernet: yes between inputs: no from the outputs: yes to expansion devices: yes
Rated operational voltage	U_e	V AC	24
Input voltage (AC = sinusoidal)	U_e	V	Status 0: ≦ 5 (I1 - I8) Condition 1: ≧ 14 (I1 - I8)
Rated frequency		Hz	50/60
Input current at signal 1		mA	I1 - I4: 3.5 (at 24 VAC/DC) I5 - I8: 1.8 (at 24 VAC/DC)
Deceleration time		ms	45/38 (0 -> 1/1 -> 0, debounce ON 50/60Hz) type 25/21 (0 - > 1/1 -> 0, debounce OFF 50/60Hz)
Cable length		m	40 (unshielded)

Analog inputs

Number			4 (I5, I6, I7, I8)
Potential isolation			from power supply: no to the memory card: no to Ethernet: yes between inputs: no from the outputs: yes to expansion devices: yes
Input type			DC voltage
Signal range			0-10 V DC
Resolution			12 Bit (value 0 - 4095)
Input impedance		kΩ	13.3
Accuracy of actual value			
two devices from series		%	± 3 , ± 0.12 V
Within a single device		%	± 2, ± 0.12 V
Conversion time, analog/digital		ms	each CPU cycle
Input current		mA	< 1
Cable length		m	≦ 30, screened

Relay outputs

Number			4
Outputs in groups of			1
Parallel switching of outputs for increased output			Not allowed
Protection of an output relay			Miniature circuit-breaker B16 or slow-blow 8 A fuse
Potential isolation			Safe isolation according to EN 50178: 300 V AC Basic isolation: 600 V AC from power supply: yes From the inputs: yes between outputs: yes to Ethernet: yes to expansion devices: yes
Contacts			
Conventional thermal current (10 A UL)		A	8
Recommended for load: 12 V AC/DC		mA	> 500
Rated impulse withstand voltage U_{imp} of contact coil		kV	6
Rated operational voltage	U_e	V AC	240
Rated insulation voltage	U_i	V AC	240
Safe isolation according to EN 50178		V AC	300 between coil and contact 300 between two contacts
Making capacity			
AC--15, 250 V AC, 3 A (600 ops./h)	Operations		300000
DC-13, L/R ≦ 150 ms, 24 V DC, 1 A (500 S/h)	Operations		200000
Breaking capacity			
AC-15, 250 V AC, 3 A (600 Ops./h)	Operations		300000
DC-13, L/R ≦ 150 ms, 24 V DC, 1 A (500 S/h)	Operations		200000
Filament bulb load			
1000 W at 230/240 V AC	Operations		25000
500 W at 115/120 V AC	Operations		25000

Fluorescent lamp load			
Fluorescent lamp load 10 x 58 W at 230/240 V AC			
With upstream electrical device	Operations		25000
Uncompensated	Operations		25000
Fluorescent lamp load 1 x 58 W at 230/240 V AC, conventional, compensated	Operations		25000
Switching frequency			
Mechanical operations		x 10^6	10
Switching frequency		Hz	10
Resistive load/lamp load		Hz	2
Inductive load		Hz	0.5
UL/CSA			
Uninterrupted current at 240 V AC		A	10
Uninterrupted current at 24 V DC		A	8
AC			
Control Circuit Rating Codes (utilization category)			B 300 Light Pilot Duty
Max. rated operational voltage		V AC	300
max. thermal continuous current cos φ = 1 at B 300		A	5
max. make/break cos φ ≠ capacity 1 at B 300		VA	3600/360
DC			
Control Circuit Rating Codes (utilization category)			R 300 Light Pilot Duty
Max. rated operational voltage		V DC	300
Max. thermal uninterrupted current at R 300		A	1
Max. make/break capacity at R 300		VA	28/28

Ethernet

Data transfer rate		Mbit/s	10/100
Connections			RJ45 plug, 8-pin
Cable			CAT5

Design verification as per IEC/EN 61439

Technical data for design verification			
Static heat dissipation, non-current-dependent	P_{vs}	W	3
Operating ambient temperature min.		°C	-25
Operating ambient temperature max.		°C	55
IEC/EN 61439 design verification			
10.2 Strength of materials and parts			
10.2.2 Corrosion resistance			Meets the product standard's requirements.
10.2.3.1 Verification of thermal stability of enclosures			Meets the product standard's requirements.
10.2.3.2 Verification of resistance of insulating materials to normal heat			Meets the product standard's requirements.
10.2.3.3 Verification of resistance of insulating materials to abnormal heat and fire due to internal electric effects			Meets the product standard's requirements.
10.2.4 Resistance to ultra-violet (UV) radiation			Meets the product standard's requirements.
10.2.5 Lifting			Does not apply, since the entire switchgear needs to be evaluated.
10.2.6 Mechanical impact			Does not apply, since the entire switchgear needs to be evaluated.
10.2.7 Inscriptions			Meets the product standard's requirements.
10.3 Degree of protection of ASSEMBLIES			Meets the product standard's requirements.
10.4 Clearances and creepage distances			Meets the product standard's requirements.
10.5 Protection against electric shock			Does not apply, since the entire switchgear needs to be evaluated.
10.6 Incorporation of switching devices and components			Does not apply, since the entire switchgear needs to be evaluated.
10.7 Internal electrical circuits and connections			Is the panel builder's responsibility.
10.8 Connections for external conductors			Is the panel builder's responsibility.
10.9 Insulation properties			
10.9.2 Power-frequency electric strength			Is the panel builder's responsibility.
10.9.3 Impulse withstand voltage			Is the panel builder's responsibility.
10.9.4 Testing of enclosures made of insulating material			Is the panel builder's responsibility.
10.10 Temperature rise			The panel builder is responsible for the temperature rise calculation. Eaton will provide heat dissipation data for the devices.

10.11 Short-circuit rating			Is the panel builder's responsibility.
10.12 Electromagnetic compatibility			Is the panel builder's responsibility.
10.13 Mechanical function			The device meets the requirements, provided the information in the instruction leaflet (IL) is observed.

Technical data ETIM 7.0

PLC's (EG000024) / Logic module (EC001417)		
Electric engineering, automation, process control engineering / Control / Programmable logic control (SPS) / Logic module (ecl@ss10.0.1-27-24-22-16 [AKE539014])		
Supply voltage AC 50 Hz	V	20.4 - 28.8
Supply voltage AC 60 Hz	V	20.4 - 28.8
Supply voltage DC	V	10.2 - 28.8
Voltage type of supply voltage		AC/DC
Switching current	A	8
Number of analogue inputs		4
Number of analogue outputs		0
Number of digital inputs		8
Number of digital outputs		4
With relay output		Yes
Number of HW-interfaces industrial Ethernet		1
Number of interfaces PROFINET		0
Number of HW-interfaces RS-232		0
Number of HW-interfaces RS-422		0
Number of HW-interfaces RS-485		0
Number of HW-interfaces serial TTY		0
Number of HW-interfaces USB		0
Number of HW-interfaces parallel		0
Number of HW-interfaces Wireless		0
Number of HW-interfaces other		1
With optical interface		No
Supporting protocol for TCP/IP		Yes
Supporting protocol for PROFIBUS		No
Supporting protocol for CAN		No
Supporting protocol for INTERBUS		No
Supporting protocol for ASI		No
Supporting protocol for KNX		No
Supporting protocol for MODBUS		Yes
Supporting protocol for Data-Highway		No
Supporting protocol for DeviceNet		No
Supporting protocol for SUCONET		No
Supporting protocol for LON		No
Supporting protocol for PROFINET IO		No
Supporting protocol for PROFINET CBA		No
Supporting protocol for SERCOS		No
Supporting protocol for Foundation Fieldbus		No
Supporting protocol for EtherNet/IP		No
Supporting protocol for AS-Interface Safety at Work		No
Supporting protocol for DeviceNet Safety		No
Supporting protocol for INTERBUS-Safety		No
Supporting protocol for PROFIsafe		No
Supporting protocol for SafetyBUS p		No
Supporting protocol for other bus systems		No
Radio standard Bluetooth		No
Radio standard WLAN 802.11		No
Radio standard GPRS		No
Radio standard GSM		No
Radio standard UMTS		No

IO link master		No
Redundancy		No
With display		No
Degree of protection (IP)		IP20
Basic device		Yes
Expandable		Yes
Expansion device		No
With timer		Yes
Rail mounting possible		Yes
Wall mounting/direct mounting		Yes
Front build in possible		Yes
Rack-assembly possible		No
Suitable for safety functions		No
Category according to EN 954-1		-
SIL according to IEC 61508		None
Performance level acc. EN ISO 13849-1		None
Appendant operation agent (Ex ia)		No
Appendant operation agent (Ex ib)		No
Explosion safety category for gas		None
Explosion safety category for dust		None
Width	mm	71.5
Height	mm	90
Depth	mm	58

Approvals

Degree of Protection		IEC: IP20, UL/CSA Type: -

Dimensions

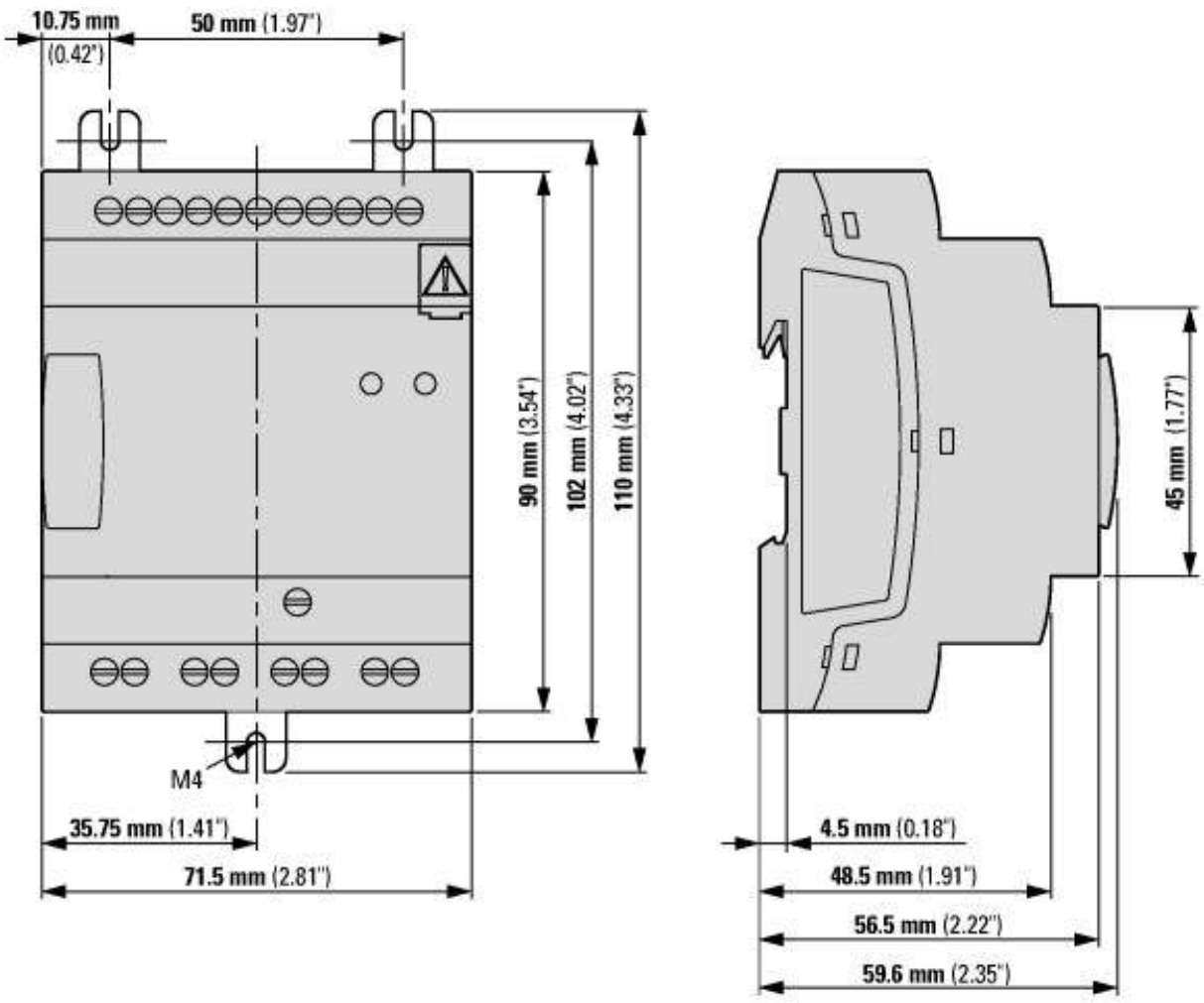

Assets (links)

Declaration of CE Conformity

00003208

© 05/2019 by Eaton Industries GmbH