ISSUE DATE: 06/20/2014

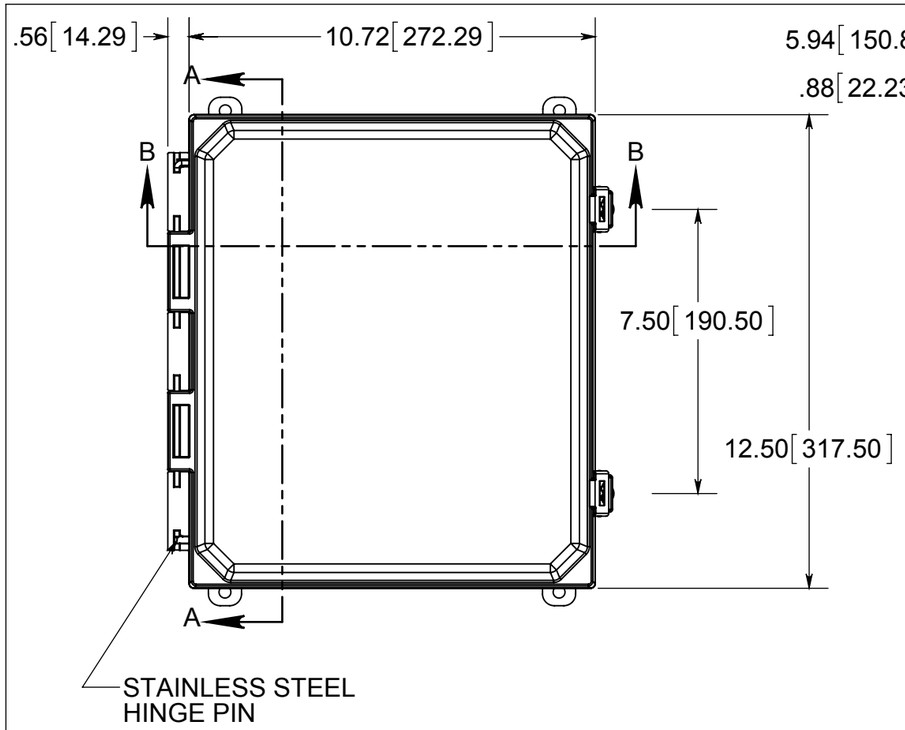

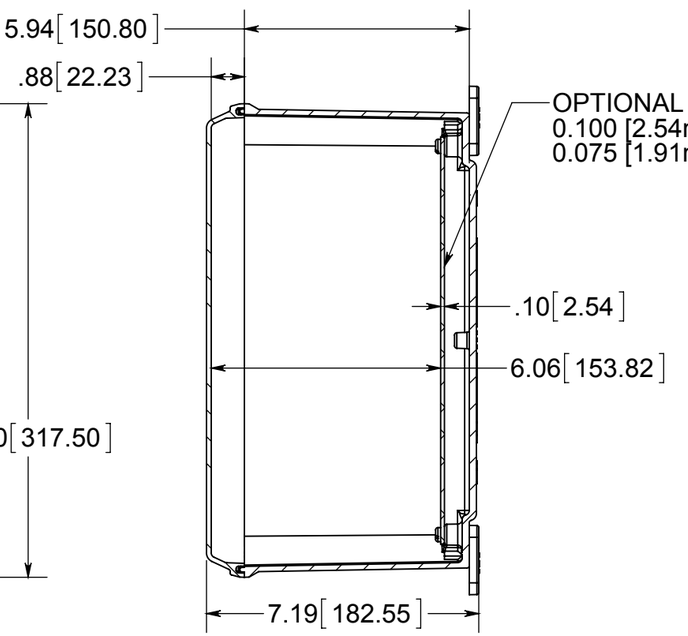

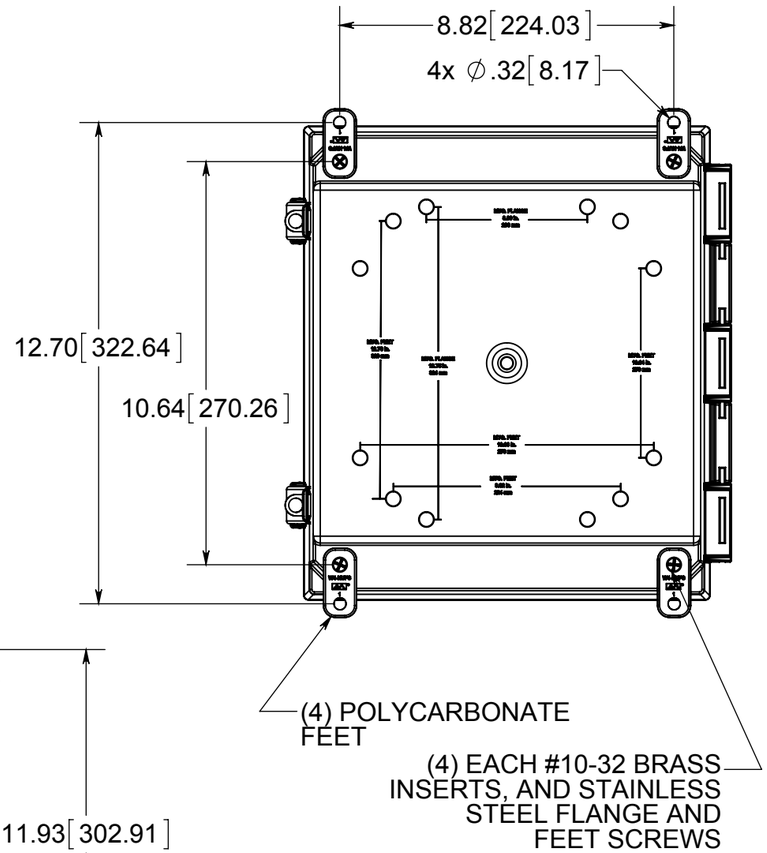

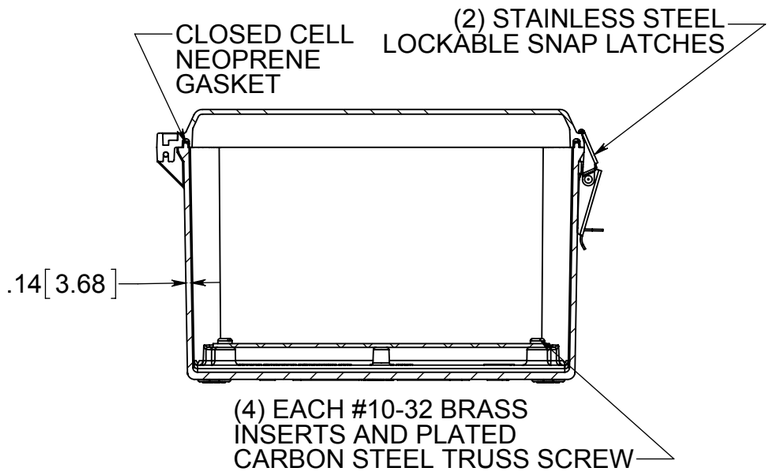

FRONT VIEW
WITH COVER REMOVED
AND BACK PANEL DISPLAYED

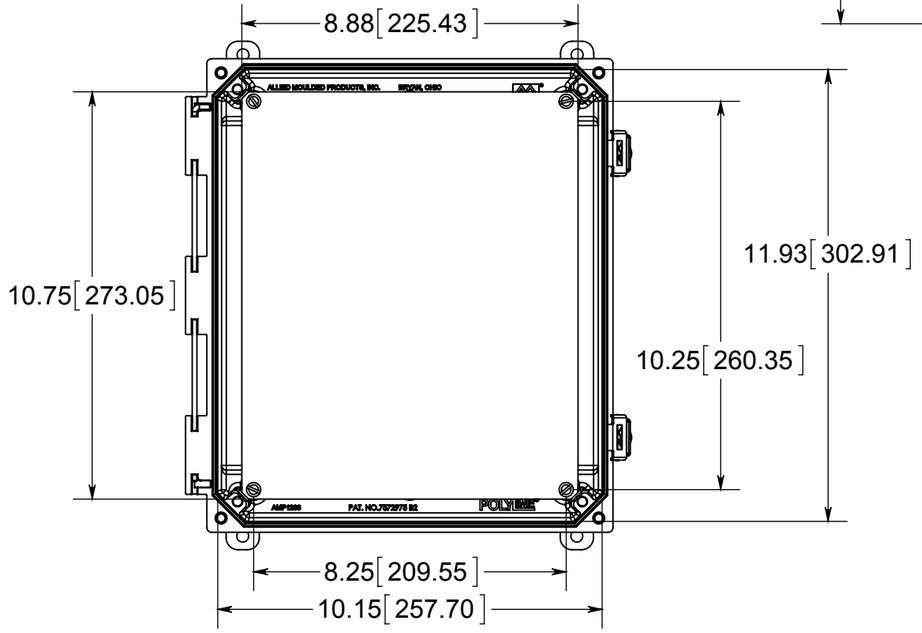

MATERIAL:
BOX- INJECTED POLYCARBONATE
STANDARD COVER- INJECTED POLYCARBONATE
CLEAR COVER - INJECTED POLYCARBONATE

PART No. PCJ12106L

for more information visit
www.hammfg.com
Data subject to change without notice

Drawing Not to Scale