TI01040F/00/EN/10.20
71486056
2020-07-31

Technical Information
Micropilot FMR51, FMR52

Free space radar

Level measurement in liquids





Application

- Continuous, non-contact level measurement of liquids, pastes and slurries
- Horn antenna (FMR51); flush mounted, completely filled PTFE horn antenna (FMR52)
- Maximum measuring range: 70 m (230 ft)
- Process temperature: −196 to +450 °C (−321 to +842 °F)
- Process pressure: −1 to +160 bar (−14.5 to +2 320 psi)
- Accuracy: ± 2 mm
- International explosion protection certificates; WHG; marine approvals
- Linearity protocol (3-point, 5-point)

Your benefits

- Reliable measurement even for changing product and process conditions
- HistoROM data management for easy commissioning, maintenance and diagnostics
- Highest reliability due to Multi-Echo Tracking
- SIL2 according to IEC 61508, SIL3 in case of homogeneous or heterogeneous redundancy
- Seamless integration into control or asset management systems
- Intuitive user interface in national languages
- *Bluetooth*® wireless technology for commissioning, operation and maintenance via free iOS / Android app SmartBlue
- Easy proof test for SIL and WHG
- Heartbeat Technology™

Endress+Hauser
People for Process Automation

Table of contents

Important document information 4
Document function 4
Symbols used 4

Terms and abbreviations 5

Registered trademarks 6

Function and system design 7
Measuring principle 7

Input 9
Measured variable 9
Measuring range 9
Operating frequency 14
Transmission power 14

Output 15
Output signal 15
Signal on alarm 16
Linearization 16
Galvanic isolation 16
Protocol-specific data 16

Power supply 21
Terminal assignment 21
Device plugs 29
Supply voltage 30
Power consumption 32
Current consumption 32
Power supply failure 33
Potential equalization 33
Terminals 33
Cable entries 33
Cable specification 33
Overvoltage protection 34

Performance characteristics 35
Reference operating conditions 35
Maximum measured error 35
Measured value resolution 36
Response time 36
Influence of ambient temperature 36
Influence of gas phase 36
Gas phase compensation with external pressure sensor (PROFIBUS PA, FOUNDATION Fieldbus) 37

Installation 38
Installation conditions 38
Process conditions 41
Mounting cladded flanges 42
Free-space installation in vessel 43
Installation in stilling well 46
Installation in the bypass 49
Container with heat insulation 51

Environment 52
Temperature range 52
Temperature limit 52
Storage temperature 60
Climate class 61
Altitude according to IEC61010-1 Ed.3 61
Degree of protection 61
Vibration resistance 61
Cleaning the antenna 61
Electromagnetic compatibility (EMC) 61

Process 62
Process temperature, process pressure 62

Mechanical construction 65
Dimensions 65
Weight 74
Materials: Housing GT18 (stainless steel, corrosion-resistant) 75
Materials: GT19 housing (plastic) 76
Materials: GT20 housing (die-cast aluminum, powder-coated) 77
Materials: antenna and process connection 78
Materials: Weather protection cover 80

Operability 81
Operating concept 81
Local operation 82
Operation with remote display and operating module FHX50 82
Operation via Bluetooth® wireless technology 83
Remote operation 84
Integration in tank gauging system 87
SupplyCare inventory management software 88

Certificates and approvals 91
CE mark 91
RoHS 91
RCM-Tick marking 91
Ex approval 91
Dual seal according to ANSI/ISA 12.27.01 91
Functional safety 91
WHG 91
Hygienic compatibility 91
NACE MR 0175 / ISO 15156 92
NACE MR 0103 92
Pressure equipment with allowable pressure ≤ 200 bar (2 900 psi) 92
Marine approval 92
Radio standard EN 302729 92
Radio standard EN 302372 93
FCC 93
Industry Canada 93
Japanese radio approval 94
CRN approval 94
Test, certificate 96
Hard-copy product documentation 96
Other standards and guidelines 97

Ordering information 98
Ordering information 98
3-point linearity protocol 99
5-point linearity protocol 100
Customer-specific configuration 101
Tagging (TAG) 101
Services 101

Application packages 102
Heartbeat Diagnostics 102
Heartbeat Verification 103
Heartbeat Monitoring 104

Accessories 105
Device-specific accessories 105
Communication-specific accessories 111
Service-specific accessories 112
System components 112

Supplementary documentation 112
Brief Operating Instructions (KA) 112
Operating Instructions (BA) 112
Safety Instructions (XA) 112

Important document information

Document function

These Operating Instructions provide all of the information that is required in various phases of the life cycle of the device including:
- Product identification
- Incoming acceptance
- Storage
- Installation
- Connection
- Operation
- Commissioning
- Troubleshooting
- Maintenance
- Disposal

Symbols used

Safety symbols

DANGER
This symbol alerts you to a dangerous situation. Failure to avoid this situation will result in serious or fatal injury.

WARNING
This symbol alerts you to a dangerous situation. Failure to avoid this situation can result in serious or fatal injury.

CAUTION
This symbol alerts you to a dangerous situation. Failure to avoid this situation can result in minor or medium injury.

NOTICE
This symbol contains information on procedures and other facts which do not result in personal injury.

Electrical symbols

Direct current

Alternating current

Direct current and alternating current

Ground connection
A grounded terminal which, as far as the operator is concerned, is grounded via a grounding system.

Protective earth (PE)
Ground terminals that must be connected to ground prior to establishing any other connections.
The ground terminals are located on the inside and outside of the device.
- Interior ground terminal; protective earth is connected to the mains supply.
- Exterior ground terminal; device is connected to the plant grounding system.

Symbols for certain types of information and graphics

Permitted
Procedures, processes or actions that are permitted

Preferred
Procedures, processes or actions that are preferred

Forbidden
Procedures, processes or actions that are forbidden

Tip
Indicates additional information

Reference to graphic

▶
Notice or individual step to be observed

1., 2., 3.
Series of steps

↳
Result of a step

1, 2, 3, ...
Item numbers

A, B, C, ...
Views

⚠ **Hazardous area**
Indicates the hazardous area

⚠ **Safe area (non-hazardous area)**
Indicates the non-hazardous area

Terms and abbreviations

BA
Document type "Operating Instructions"

KA
Document type "Brief Operating Instructions"

SD
Document type "Special Documentation"

XA
Document type "Safety Instructions"

PN
Nominal pressure

FieldCare
Scalable software tool for device configuration and integrated plant asset management solutions

DeviceCare
Universal configuration software for Endress+Hauser HART, PROFIBUS, FOUNDATION Fieldbus and Ethernet field devices

DTM
Device Type Manager

DD
Device Description for HART communication protocol

ε_r (Dk value)
Relative dielectric constant

PLC
Programmable logic controller (PLC)

CDI
Common Data Interface

Operating tool

The term "operating tool" is used in place of the following operating software:
- FieldCare / DeviceCare, for operation via HART communication and PC
- SmartBlue (app), for operation using an Android or iOS smartphone or tablet

MBP
Manchester Bus Powered

PDU
Protocol Data Unit

Registered trademarks

HART®
Registered trademark of the FieldComm Group, Austin, Texas, USA

PROFIBUS®
Registered trademark of the PROFIBUS User Organization, Karlsruhe, Germany

FOUNDATION™ Fieldbus
Registration-pending trademark of the FieldComm Group, Austin, Texas, USA

Modbus®
Registered trademark of SCHNEIDER AUTOMATION, INC.

Bluetooth®
The *Bluetooth®* word mark and logos are registered trademarks owned by the Bluetooth SIG, Inc. and any use of such marks by Endress+Hauser is under license. Other trademarks and trade names are those of their respective owners.

Apple®
Apple, the Apple logo, iPhone, and iPod touch are trademarks of Apple Inc., registered in the U.S. and other countries. App Store is a service mark of Apple Inc.

Android®
Android, Google Play and the Google Play logo are trademarks of Google Inc.

KALREZ®, VITON®
Registered trademarks of DuPont Performance Elastomers L.L.C., Wilmington, DE USA

TRI-CLAMP®
Registered trademark of Ladish & Co., Inc., Kenosha, USA

Function and system design

Measuring principle

The Micropilot is a "downward-looking" measuring system, operating based on the time-of-flight method (ToF). It measures the distance from the reference point R (process connection of the measuring device) to the product surface. Radar pulses are emitted by an antenna, reflected off the product surface and received again by the radar system.

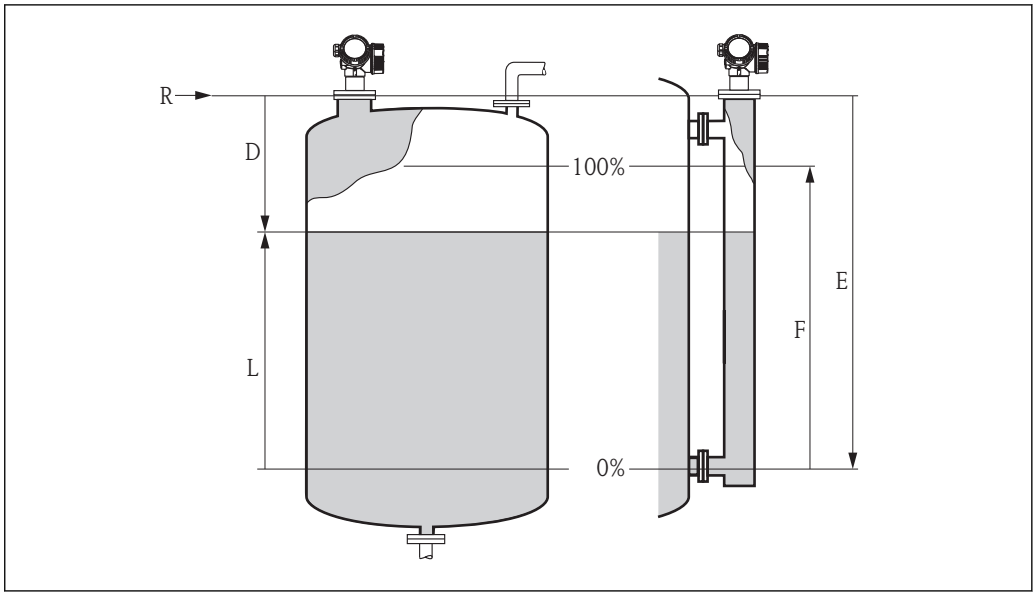

1 *Setup parameters of the Micropilot*

R Reference point of the measurement (lower edge of the flange or threaded connection)
E Empty calibration (= zero)
F Full calibration (= span)
D Measured distance
L Level (L = E - D)

Input

The reflected radar impulses are received by the antenna and transmitted into the electronics. A microprocessor evaluates the signals and identifies the level echo caused by the reflection of the radar pulses at the product surface. The unambiguous signal identification is accomplished by the PulseMaster® eXact software together with the Multi-echo tracking algorithms, based on over 30 years of experience with time-of-flight technology.

The distance D to the product surface is proportional to the time of flight t of the impulse:

$D = c \cdot t/2$,

with c being the speed of light.

Based on the known empty distance E, the level L is calculated:

$L = E - D$

The Micropilot is equipped with functions to suppress interference echoes. The user can activate these functions. Together with the multi-echo tracking algorithms they ensure that interference echoes, e.g. from from internal fixtures and struts, are not interpreted as level echoes.

Output

The Micropilot is configured by entering the empty distance "E" (= zero), the full distance "F" (= span) and application parameters which automatically adapt the device to the process conditions. For models with a current output, the factory adjustment for zero point "E" and span "F" is 4 mA and 20 mA. For digital outputs and the display module, the factory adjustment for zero point "E" and span "F" is 0 % and 100 %.

A linearization function with max. 32 points, based on a table entered either manually or semi-automatically, can be activated locally or remotely. This function provides a measurement in engineering units and a linear output signal for spherical and horizontal cylindrical vessels and vessels with a conical outlet.

Product life cycle

Planning
- Universal measuring principle
- Measurement is independent of product properties
- Hardware and software developed according to SIL IEC 61508

Procurement
- As the global market leader in level measurement, Endress+Hauser guarantees the security of your investment
- Worldwide support and service

Installation
- No special tools are required
- Protection against reverse polarity
- Modern, detachable terminals
- Main electronics protected by a separate connection compartment

Commissioning
- Fast, menu-guided commissioning in only a few steps onsite or from the control room
- Plain text display in local language reduces the risk of error or confusion
- Direct local access to all parameters
- Printed Brief Operating Instructions in the device onsite

Operation
- Multi-echo tracking: Reliable measurement thanks to self-learning echo search algorithms taking into account the short-term and long-term history and plausibility of the detected signals to suppress interference echoes.
- In accordance with NAMUR NE107

Maintenance
- HistoROM: Data backup for device settings and measured values
- Exact device and process diagnostics to assist fast decisions with clear information regarding remedial action
- Intuitive, menu-guided operating concept in local language saves costs for training, maintenance and operation
- Cover of the electronics compartment can also be opened in the hazardous area

Retirement
- Order code translation for subsequent models
- RoHS-compliant (Restriction of certain Hazardous Substances), unleaded soldering of electronic components
- Environmentally friendly recycling approach

Input

Measured variable

The measured variable is the distance between the reference point and the product surface.

The level is calculated based on "E", the empty distance entered.

Optionally, the level can be converted to other variables (volume, mass) by linearization (32 points).

Measuring range

Maximum measuring range

FMR51	Maximum measuring range
Standard version	40 m (131 ft)
Application package "Advanced dynamics"	70 m (230 ft)

FMR52	Maximum measuring range
Standard version	40 m (131 ft)
Application package "Advanced dynamics"	60 m (197 ft)

Usable measuring range

The usable measuring range depends on the antenna size, the medium's reflective properties, the installation position and any possible interference reflections.

The media groups and the possible measuring range are described as a function of the application and media group in the following section. If the dielectric constant of the medium is not known, to ensure a reliable measurement assume the medium belongs to group B.

Media groups

Media group	ε_r	Example
A	1.4 to 1.9	Non-conductive liquids, e.g. liquid gas [1]
B	1.9 to 4	Non-conductive liquids, e.g. gasoline, oil, toluene, etc.
C	4 to 10	E.g. concentrated acid, organic solvents, ester, aniline, alcohol, acetone.
D	> 10	Conductive liquids, aqueous solutions, diluted acids and bases

1) Treat ammonia gas (NH_3) like "group A" media.

For dielectric constants (DC values) of many media commonly used in various industries refer to:
- the Endress+Hauser DC manual (CP01076F)
- the Endress+Hauser "DC Values App" (available for Android and iOS)

<table>
<tr><th>Device</th><th colspan="4">Storage vessel</th></tr>
<tr><td rowspan="2"></td><td colspan="4">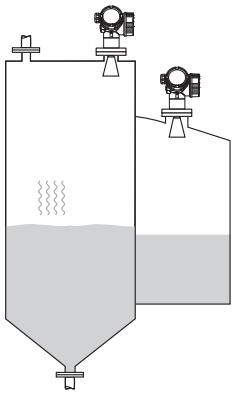
A0018833
Calm surface (e.g. bottom filling, filling via immersion tube or rare filling from above)</td></tr>
<tr><td colspan="4">Antenna size</td></tr>
<tr><td>FMR51</td><td>40 mm (1½ in)</td><td>50 mm (2 in)</td><td>80 mm (3 in)</td><td>100 mm (4 in)</td></tr>
<tr><td>FMR52</td><td>-</td><td>50 mm (2 in)</td><td>80 mm (3 in)</td><td>-</td></tr>
<tr><td></td><td>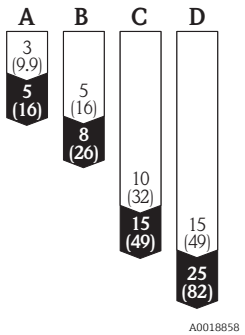

A0018858</td><td>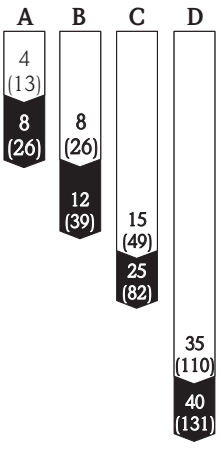

A0018859</td><td>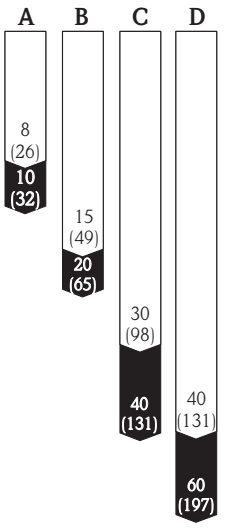

A0018860</td><td>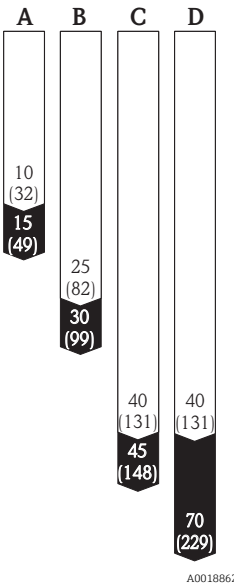

A0018862</td></tr>
<tr><td colspan="4">Measuring range [m (ft)]</td></tr>
</table>

Legend

▯	Measuring range of standard version
▮	Measuring range with "Advanced dynamics" application package (product structure: feature 540 "Application packages", option EM "Advanced dynamics")

Device	Buffer vessel			
	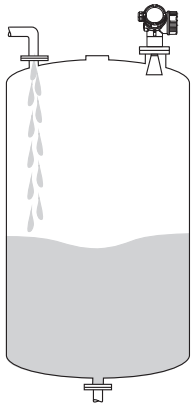 A0018835 Moving surface (e.g. continuous free filling from above, mixing jets)			
	Antenna size			
FMR51	40 mm (1½ in)	50 mm (2 in)	80 mm (3 in)	100 mm (4 in)
FMR52	-	50 mm (2 in)	80 mm (3 in)	-
	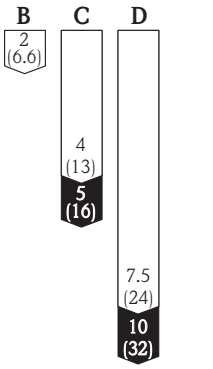 A0018863	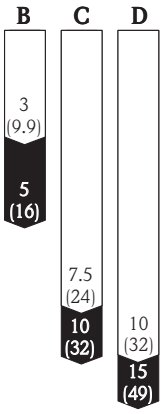 A0018864	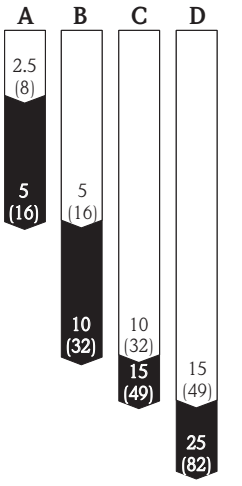 A0018865	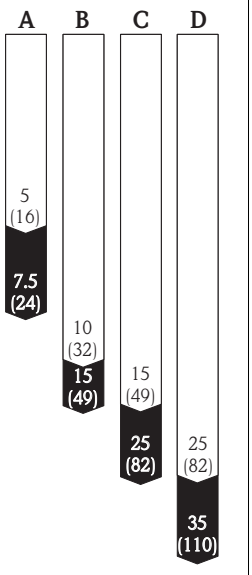 A0018866
	Measuring range [m (ft)]			

Legend

▯	Measuring range of standard version
▮	Measuring range with "Advanced dynamics" application package (product structure: feature 540 "Application packages", option EM "Advanced dynamics")

Device	Vessel with agitator			
	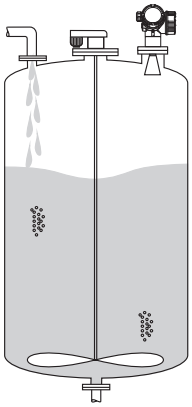 A0018837 Turbulent surface (e.g. filling from above, agitators, baffles etc.)			
	Antenna size			
FMR51	40 mm (1½ in)	50 mm (2 in)	80 mm (3 in)	100 mm (4 in)
FMR52	-	50 mm (2 in)	80 mm (3 in)	-
	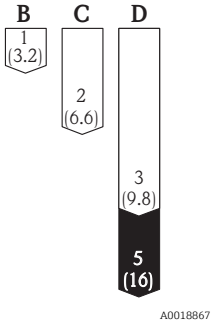 A0018867	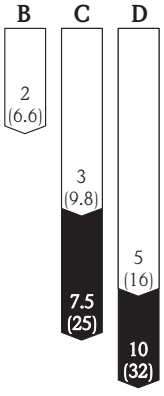 A0018868	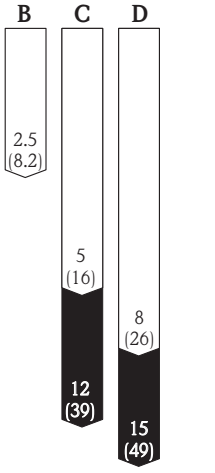 A0018869	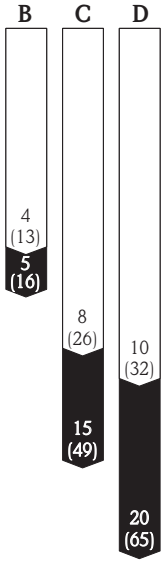 A0018870
	Measuring range [m (ft)]			

Legend

▯	Measuring range of standard version
▮	Measuring range with "Advanced dynamics" application package (product structure: feature 540 "Application packages", option EM "Advanced dynamics")

Device	Stilling well	Bypass
	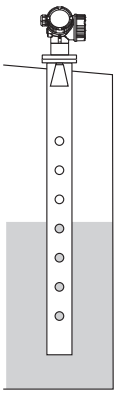 A0018842	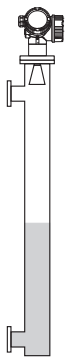 A0018840
	Antenna size	Antenna size
FMR51	40 to 100 mm (1½ to 4 in)	40 to 100 mm (1½ to 4 in)
FMR52	50 to 80 mm (2 to 3 in)	50 to 80 mm (2 to 3 in)
	A, B, C, D  A0018851	**C, D**  A0018852
	Measuring range [m (ft)]	

Operating frequency

K-band (~ 26 GHz)

As the transmission pulses are statistically coded, up to 8 Micropilot transmitters can be installed in the same tank.

Transmission power

Distance	Mean power density in the direction of the beam	
	Standard version	Application package "Advanced dynamics"
1 m (3.3 ft)	< 12 nW/cm^2	< 64 nW/cm^2
5 m (16 ft)	< 0.4 nW/cm^2	< 2.5 nW/cm^2

Output

Output signal

HART
- Signal coding:
  FSK ±0.5 mA over current signal
- Data transmission rate:
  1 200 Bit/s
- Galvanic isolation:
  Yes

Bluetooth® wireless technology
- Device version:
  Order code 610 "Accessory mounted", option NF "Bluetooth"
- Operation / configuration:
  Via the *SmartBlue* app
- Range under reference conditions:
  > 10 m (33 ft)
- Encryption:
  Encrypted communication and password encryption prevent incorrect operation by unauthorized persons

PROFIBUS PA
- Signal coding:
  Manchester Bus Powered (MBP)
- Data transmission rate:
  31.25 kBit/s, Voltage mode
- Galvanic isolation:
  Yes

FOUNDATION Fieldbus
- Signal coding:
  Manchester Bus Powered (MBP)
- Data transmission rate:
  31.25 kBit/s, Voltage mode
- Galvanic isolation:
  Yes

Switch output

For HART devices, the switch output is available as an option.

- Function:
  Open collector switch output
- Switching behavior:
  Binary (conductive or non-conductive), switches when the programmable switch-on point/switch-off point is reached
- Failure mode:
  Non-conductive
- Electrical connection data:
  U = 16 to 35 V_{DC}, I = 0 to 40 mA
- Internal resistor:
  R_I < 880 Ω
  The voltage drop at this internal resistor must be taken into account when planning the configuration. For example, the resulting voltage at a connected relay must be sufficient to switch the relay.
- Insulation voltages:
  Floating, insulation voltage 1 350 V_{DC} in relation to power supply and 500 V_{AC} ground
- Switch point:
  User-programmable, separate for switch-on point and switch-off point
- Switching delay:
  User-programmable in the 0 to 100 s range, separate for switch-on point and switch-off point

- Scan rate:
  Corresponds to the measuring cycle
- Signal source / device variables:
  - Level linearized
  - Distance
  - Terminal voltage
  - Electronic temperature
  - Relative echo amplitude
  - Diagnostic values, advanced diagnostic blocks
  - Only for active interface measurement
- Number of switch cycles:
  Unlimited

Signal on alarm

Depending on the interface, failure information is displayed as follows:
- Current output
  - Choice of failure mode (in accordance with NAMUR Recommendation NE 43):
    Minimum alarm: 3.6 mA
    Maximum alarm (= factory setting): 22 mA
  - Failure mode with user-configurable value: 3.59 to 22.5 mA
- Local display
  - Status signal (as per NAMUR Recommendation NE 107)
  - Plain text display
- Operating tool via digital communication (HART, PROFIBUS PA, FOUNDATION Fieldbus) or service interface (CDI)
  - Status signal (as per NAMUR Recommendation NE 107)
  - Plain text display

Linearization

The device's linearization function allows the user to convert the measured value to any length or volume units. Linearization tables for calculating the volume in cylindrical vessels are preprogrammed into the device. Other linearization tables of up to 32 value pairs can be entered manually or semi-automatically.

Galvanic isolation

All circuits for the outputs are galvanically isolated from each other.

Protocol-specific data

HART

Manufacturer ID	17 (0x11)
Device type ID	0x1128
HART specification	7.0
Device description files (DTM, DD)	Information and files under: ▪ www.endress.com ▪ www.fieldcommgroup.org
HART load	min. 250 Ω

HART device variables	The measured values can be freely assigned to the device variables. **Measured values for PV (primary variable)** ▪ Level linearized ▪ Distance ▪ Electronic temperature ▪ Relative echo amplitude ▪ Area of incoupling ▪ Analog output adv. diagnostics 1 ▪ Analog output adv. diagnostics 2 **Measured values for SV, TV, QV (second, third and fourth variable)** ▪ Level linearized ▪ Distance ▪ Electronic temperature ▪ Terminal voltage ▪ Relative echo amplitude ▪ Absolute echo amplitude ▪ Area of incoupling ▪ Analog output adv. diagnostics 1 ▪ Analog output adv. diagnostics 2
Supported functions	▪ Burst mode ▪ Additional transmitter status

Wireless HART data

Minimum starting voltage	17.5 V
Start-up current	4 mA
Starting time	80 s
Minimum operating voltage	17.5 V
Multidrop current	4.0 mA
Time for connection setup	30 s

PROFIBUS PA

Manufacturer ID	17 (0x11)
Ident number	0x1559
Profile version	3.02
GSD file GSD file version	Information and files under: ▪ www.endress.com ▪ www.profibus.org
Output values	**Analog Input:** ▪ Level linearized ▪ Distance ▪ Terminal voltage ▪ Electronic temperature ▪ Absolute echo amplitude ▪ Relative echo amplitude ▪ Analog output adv. diagnostics 1 ▪ Analog output adv. diagnostics 2 **Digital Input:** ▪ Digital output AD 1 ▪ Digital output AD 2 ▪ Switch output

Input values	**Analog Output:** ▪ Analog value from PLC (for sensor block, external pressure to compensate for gas phase effects) ▪ Analog value from PLC for transmission to display **Digital Output:** ▪ Extended Diagnostic Block ▪ Level Limiter ▪ Sensor Block Measurement On ▪ Sensor Block Save History On ▪ Status output
Supported functions	▪ Identification & Maintenance Simplest device identification on the part of the control system and nameplate ▪ Automatic Ident Number Adoption GSD compatibility mode with predecessor Micropilot M FMR2xx ▪ Physical Layer Diagnostics Installation check of the PROFIBUS segment and the Micropilot FMR5x using terminal voltage and message monitoring ▪ PROFIBUS upload/download Reading and writing parameters is up to ten times faster with PROFIBUS upload/download ▪ Condensed status Simplest and self-explanatory diagnostic information by categorizing diagnostic messages that occur

FOUNDATION Fieldbus

Manufacturer ID	0x452B48
Device type	0x1028
Device revision	0x01
DD revision	Information and files under: ▪ www.endress.com ▪ www.fieldcommgroup.org
CFF revision	
Device Tester Version (ITK version)	6.0.1
ITK Test Campaign Number	IT085300
Link Master capability (LAS)	Yes
Choice of "Link Master" and "Basic Device"	Yes; Factory setting: Basic Device
Node address	Factory setting: 247 (0xF7)
Supported functions	The following methods are supported: ▪ Restart ▪ ENP Restart ▪ Setup ▪ Linearization ▪ Self Check
Virtual Communication Relationships (VCRs)	
Number of VCRs	44
Number of link objects in VFD	50
Permanent entries	1
Client VCRs	0
Server VCRs	10
Source VCRs	43
Sink VCRs	0
Subscriber VCRs	43
Publisher VCRs	43
Device Link Capabilities	

Slot time	4
Min. delay between PDU	8
Max. response delay	20

Transducer Blocks

Block	Contents	Output values
Setup Transducer Block	Contains all the parameters for standard commissioning	▪ Level or volume (channel 1) (depending on the block configuration) ▪ Distance (channel 2)
Advanced Setup Transducer Block	Contains all the parameters for more accurate measurement configuration	No output values
Display Transducer Block	Contains parameters to configure the onsite display	No output values
Diagnostic Transducer Block	Contains diagnostic information	No output values
Advanced Diagnostic Transducer Block	Contains parameters for advanced diagnostics	No output values
Expert Configuration Transducer Block	Contains parameters that require the user to have in-depth knowledge of the operation of the device in order to configure the parameters appropriately	No output values
Expert Information Transducer Block	Contains parameters that provide information about the state of the device	No output values
Service Sensor Transducer Block	Contains parameters that can only be accessed by Endress+Hauser Service	No output values
Service Information Transducer Block	Contains parameters that provide Endress+Hauser Service with information about the state of the device	No output values
Data Transfer Transducer Block	Contains parameters for backing up the device configuration in the display module and for writing the saved configuration to the device. Access to these parameters is reserved for Endress+Hauser Service.	No output values

Function blocks

Block	Contents	Number of permanent blocks	Number of instantiatable blocks	Execution time	Functionality
Resource Block	The Resource Block contains all the data that uniquely identify the device. It is an electronic version of a nameplate of the device.	1	0	-	Enhanced
Analog Input Block	The AI Block receives the measuring data from the Sensor Block (selectable via a channel number), and makes the data available to other blocks at its output.	2	3	25 ms	Enhanced
Discrete Input Block	The Discrete Input Block receives a discrete value (e.g. indicator that measuring range has been exceeded) and makes the value available for other blocks at the output.	1	2	20 ms	Standard

Block	Contents	Number of permanent blocks	Number of instantiatable blocks	Execution time	Functionality
Multiple Analog Output Block	The Multiple Analog Output Block is used to transmit analog values from the bus to the device.	1	0	20 ms	Standard
Multiple Discrete Output Block	The Multiple Discrete Output Block is used to transmit discrete values from the bus to the device.	1	0	20 ms	Standard
PID Block	The PID Block is used as a proportional-integral-derivative controller and can be used universally for closed-loop-control in the field. It enables cascade mode and feedforward control.	1	1	25 ms	Standard
Arithmetic Block	The Arithmetic Block is designed to permit simple use of popular measurement math functions. The user does not have to know how to write equations. The math algorithm is selected by name, chosen by the user for the function to be performed.	1	1	25 ms	Standard
Signal Characterizer Block	The Signal Characterizer Block has two sections, each with an output value that is a non-linear function of the input value. The non-linear function is generated by a single look-up table with 21 arbitrary x-y pairs.	1	1	25 ms	Standard
Input Selector Block	The Input Selector Block facilitates the selection of up to four inputs and generates an output value based on the configured action. This block normally receives its inputs from AI Blocks. The block enables the selection of maximum, minimum, average and 'first good' values.	1	1	25 ms	Standard
Integrator Block	The Integrator Block integrates a variable as a function of the time or accumulates the counts from a Pulse Input Block. The Block can be used as a totalizer that totalizes until a reset, or as a batch totalizer whereby the integrated value is compared against a target value generated before or during the control routine and generates a binary signal when the target value is reached.	1	1	25 ms	Standard
Analog Alarm Block		1	1	25 ms	Standard

Up to 20 blocks can be instantiated in the device altogether, including the blocks already instantiated.

Power supply

Terminal assignment

Terminal assignment 2-wire: 4-20 mA HART

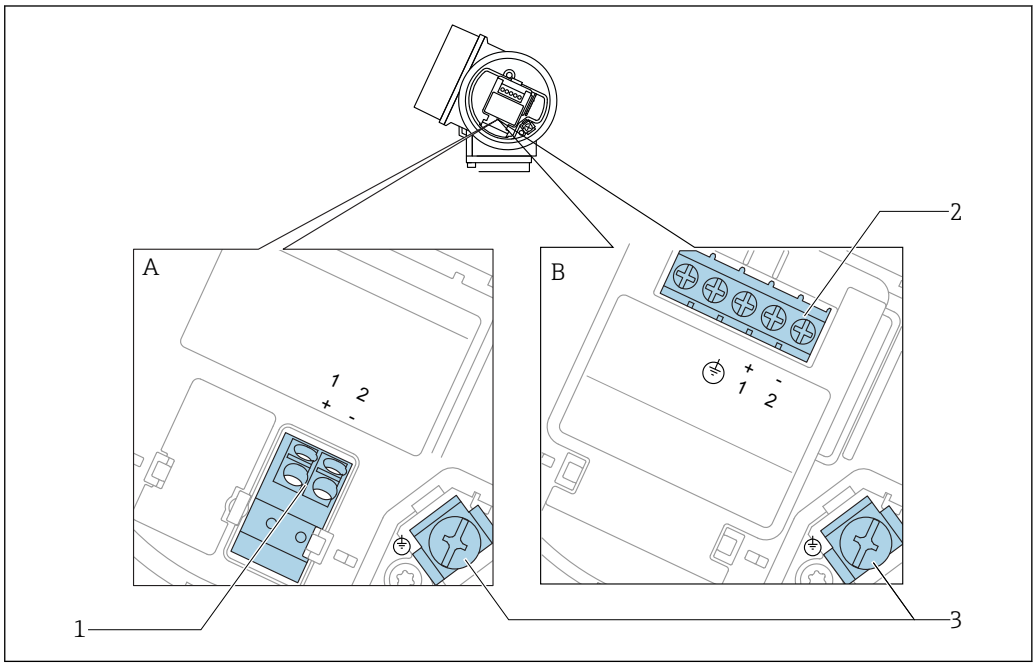

2 *Terminal assignment 2-wire: 4-20 mA HART*

A Without integrated overvoltage protection
B With integrated overvoltage protection
1 Connection 4-20 mA HART passive: terminals 1 and 2, without integrated overvoltage protection
2 Connection 4-20 mA HART passive: terminals 1 and 2, with integrated overvoltage protection
3 Terminal for cable screen

Block diagram 2-wire: 4-20 mA HART

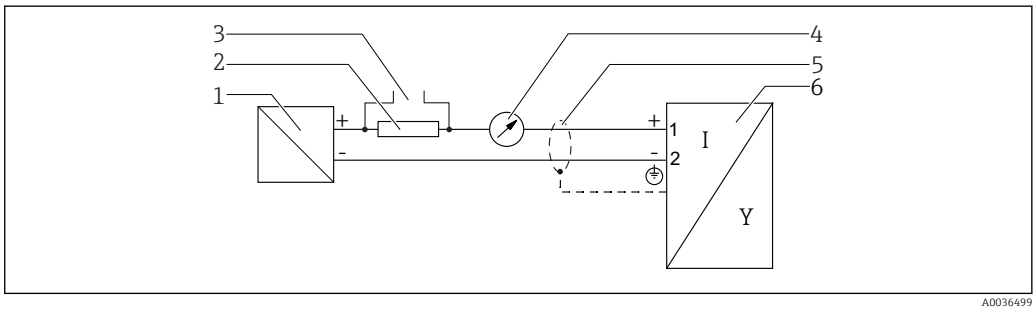

3 *Block diagram 2-wire: 4-20 mA HART*

1 Active barrier with power supply (e.g. RN221N); observe terminal voltage
2 HART communication resistor (≥ 250 Ω); observe maximum load
3 Connection for Commubox FXA195 or FieldXpert SFX350/SFX370 (via VIATOR Bluetooth modem)
4 Analog display device; observe maximum load
5 Cable screen; observe cable specification
6 Measuring device

Terminal assignment 2-wire: 4-20 mA HART, switch output

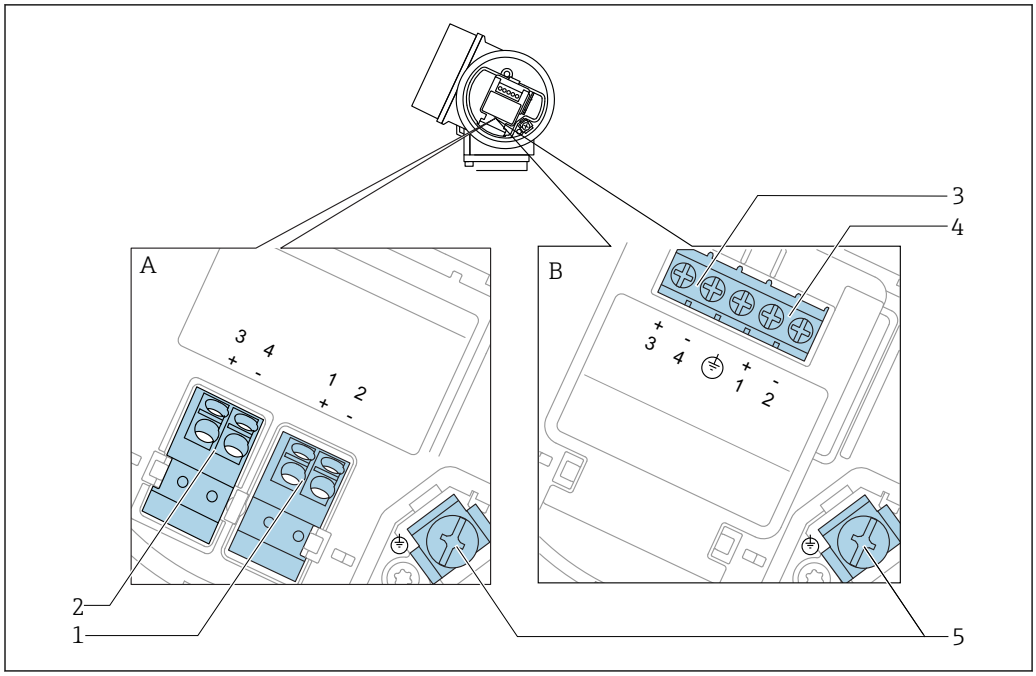

4 *Terminal assignment 2-wire: 4-20 mA HART, switch output*

A Without integrated overvoltage protection
B With integrated overvoltage protection
1 Connection 4-20 mA HART passive: terminals 1 and 2, without integrated overvoltage protection
2 Connection switch output (Open Collector): terminals 3 and 4, without integrated overvoltage protection
3 Connection switch output (Open Collector): terminals 3 and 4, with integrated overvoltage protection
4 Connection 4-20 mA HART passive: terminals 1 and 2, with integrated overvoltage protection
5 Terminal for cable screen

Block diagram 2-wire: 4-20 mA HART, switch output

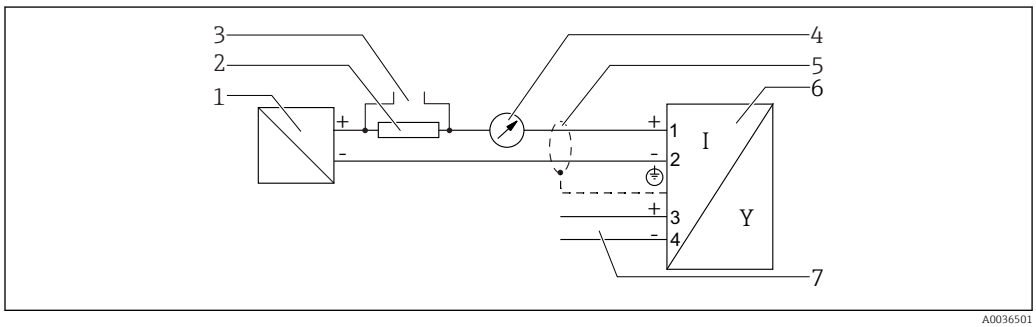

5 *Block diagram 2-wire: 4-20 mA HART, switch output*

1 Active barrier with power supply (e.g. RN221N); observe terminal voltage
2 HART communication resistor (≥ 250 Ω); observe maximum load
3 Connection for Commubox FXA195 or FieldXpert SFX350/SFX370 (via VIATOR Bluetooth modem)
4 Analog display device; observe maximum load
5 Cable screen; observe cable specification
6 Measuring device
7 Switch output (Open Collector)

Terminal assignment 2-wire: 4-20 mA HART, 4-20 mA

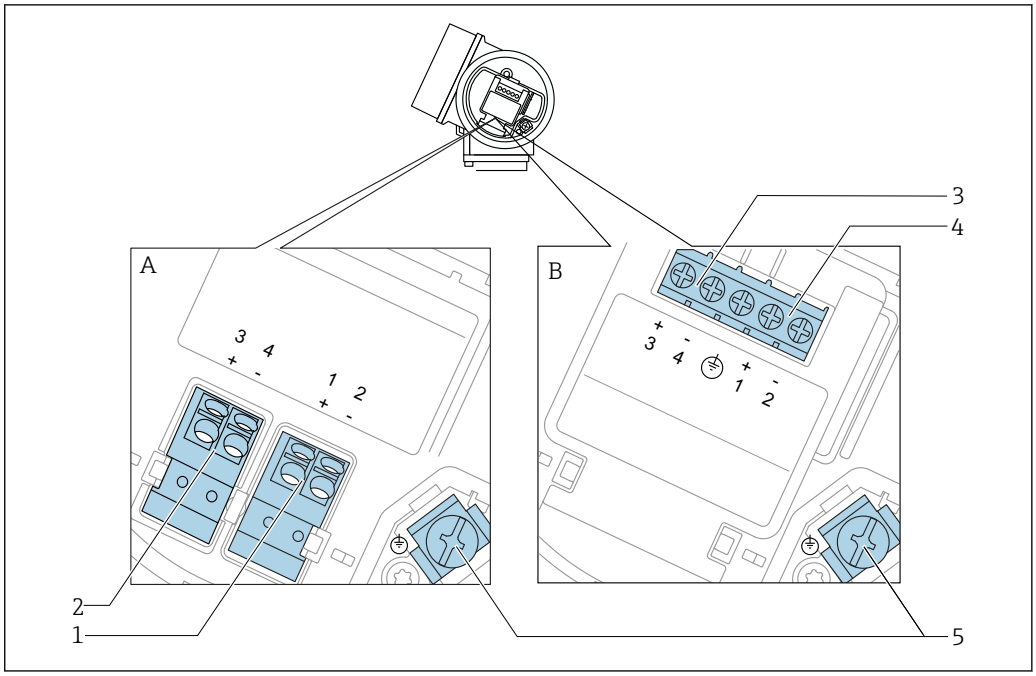

6 *Terminal assignment 2-wire: 4-20 mA HART, 4-20 mA*

A Without integrated overvoltage protection
B With integrated overvoltage protection
1 Connection current output 1, 4-20 mA HART passive: terminals 1 and 2, without integrated overvoltage protection
2 Connection current output 2, 4-20 mA: terminals 3 and 4, without integrated overvoltage protection
3 Connection current output 2, 4-20 mA: terminals 3 and 4, with integrated overvoltage protection
4 Connection current output 1, 4-20 mA HART passive: terminals 1 and 2, with integrated overvoltage protection
5 Terminal for cable screen

Block diagram 2-wire: 4-20 mA HART, 4-20 mA

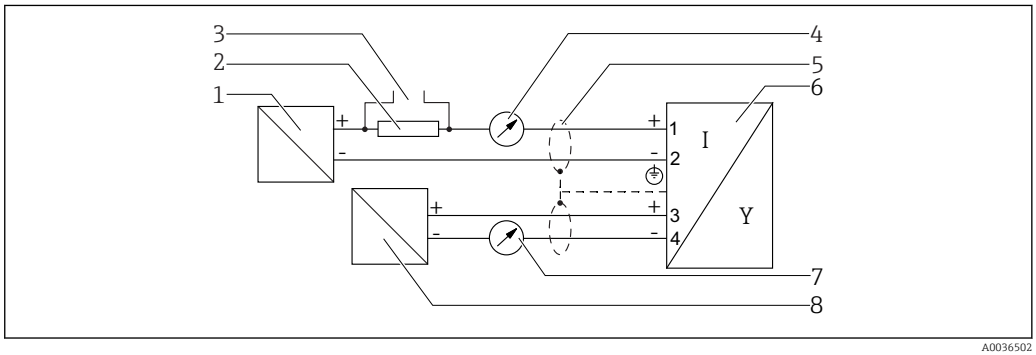

7 *Block diagram 2-wire: 4-20 mA HART, 4-20 mA*

1 Active barrier with power supply (e.g. RN221N); observe terminal voltage
2 HART communication resistor (≥ 250 Ω); observe maximum load
3 Connection for Commubox FXA195 or FieldXpert SFX350/SFX370 (via VIATOR Bluetooth modem)
4 Analog display device; observe maximum load
5 Cable screen; observe cable specification
6 Measuring device
7 Analog display device; observe maximum load
8 Active barrier with power supply (e.g. RN221N), current output 2; observe terminal voltage

Terminal assignment 4-wire: 4-20 mA HART (10.4 to 48 V_{DC})

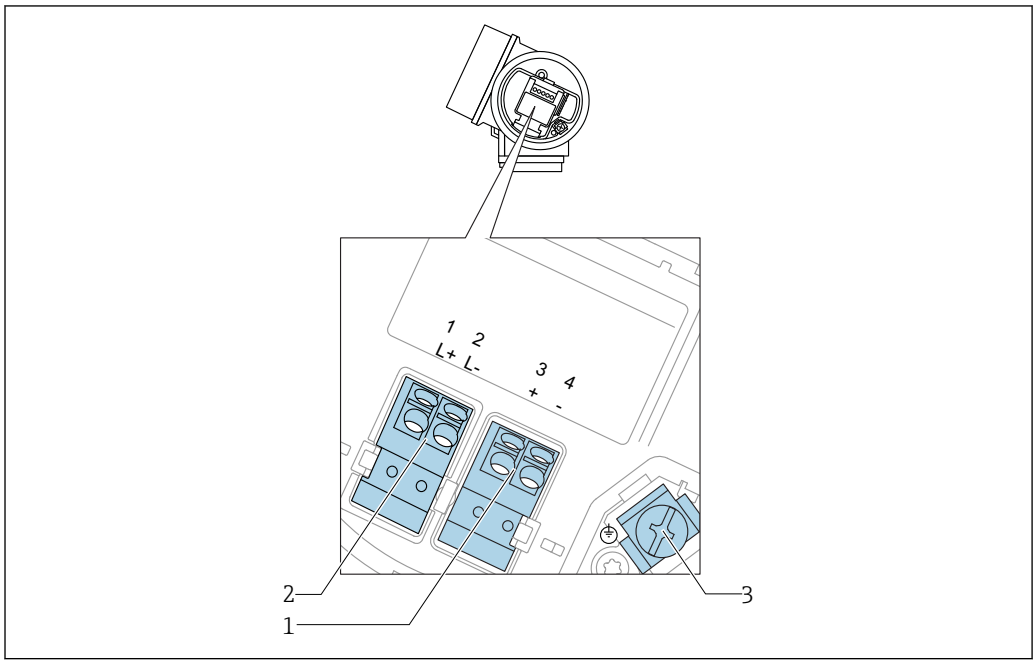

8 Terminal assignment 4-wire: 4-20 mA HART (10.4 to 48 V_{DC})

1 Connection 4-20 mA HART (active): terminals 3 and 4
2 Connection supply voltage: terminals 1 and 2
3 Terminal for cable screen

Block diagram 4-wire: 4-20 mA HART (10.4 to 48 V_{DC})

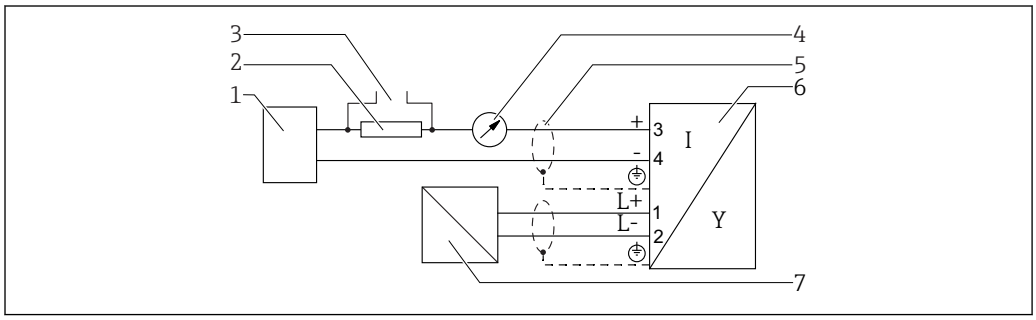

9 Block diagram 4-wire: 4-20 mA HART (10.4 to 48 V_{DC})

1 Evaluation unit, e.g. PLC
2 HART communication resistor (≥ 250 Ω); observe maximum load
3 Connection for Commubox FXA195 or FieldXpert SFX350/SFX370 (via VIATOR Bluetooth modem)
4 Analog display device; observe maximum load
5 Cable screen; observe cable specification
6 Measuring device
7 Supply voltage; observe terminal voltage, observe cable specification

Terminal assignment 4-wire: 4-20 mA HART (90 to 253 V_{AC})

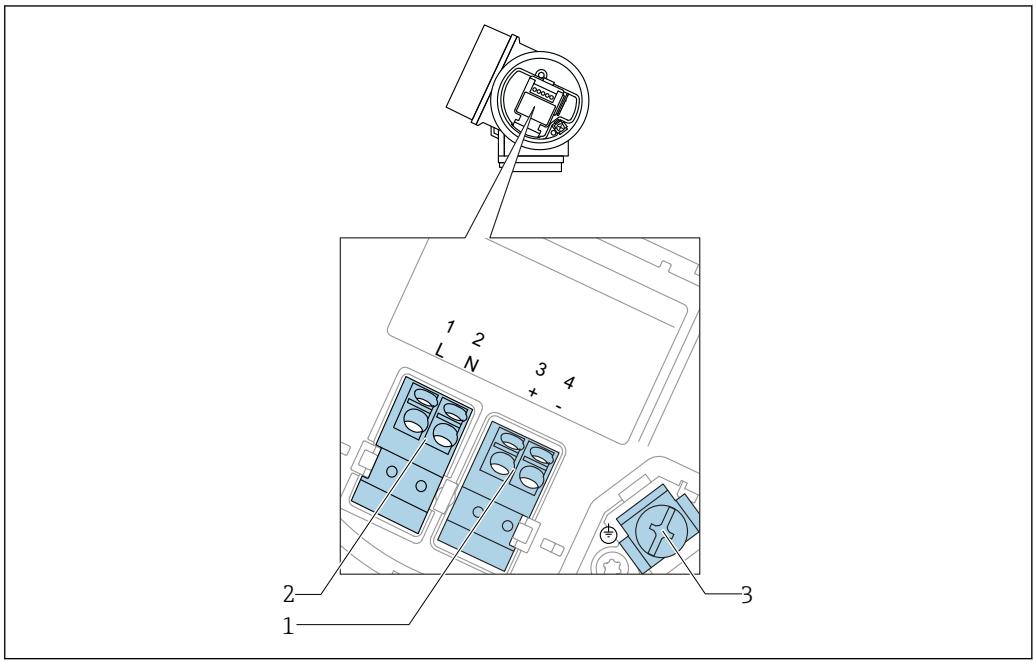

10 *Terminal assignment 4-wire: 4-20 mA HART (90 to 253 V_{AC})*

1 *Connection 4-20 mA HART (active): terminals 3 and 4*
2 *Connection supply voltage: terminals 1 and 2*
3 *Terminal for cable screen*

⚠ CAUTION

To ensure electrical safety:

- Do not disconnect the protective connection.
- Disconnect the supply voltage before disconnecting the protective earth.

Connect protective earth to the internal ground terminal (3) before connecting the supply voltage. If necessary, connect the potential matching line to the external ground terminal.

In order to ensure electromagnetic compatibility (EMC): Do **not** only ground the device via the protective earth conductor of the supply cable. Instead, the functional grounding must also be connected to the process connection (flange or threaded connection) or to the external ground terminal.

An easily accessible power switch must be installed in the proximity of the device. The power switch must be marked as a disconnector for the device (IEC/EN61010).

Block diagram 4-wire: 4-20 mA HART (90 to 253 V_{AC})

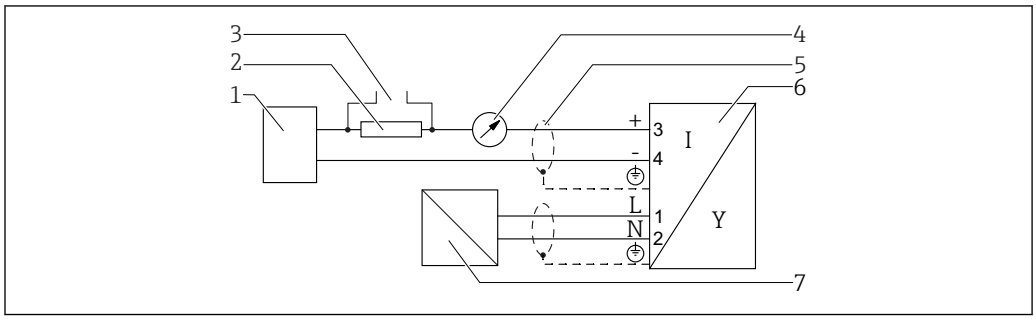

11 *Block diagram 4-wire: 4-20 mA HART (90 to 253 V_{AC})*

1 *Evaluation unit, e.g. PLC*
2 *HART communication resistor (≥ 250 Ω); observe maximum load*
3 *Connection for Commubox FXA195 or FieldXpert SFX350/SFX370 (via VIATOR Bluetooth modem)*
4 *Analog display device; observe maximum load*
5 *Cable scree; observe cable specification*
6 *Measuring device*
7 *Supply voltage; observe terminal voltage, observe cable specification*

Terminal assignment PROFIBUS PA / FOUNDATION Fieldbus

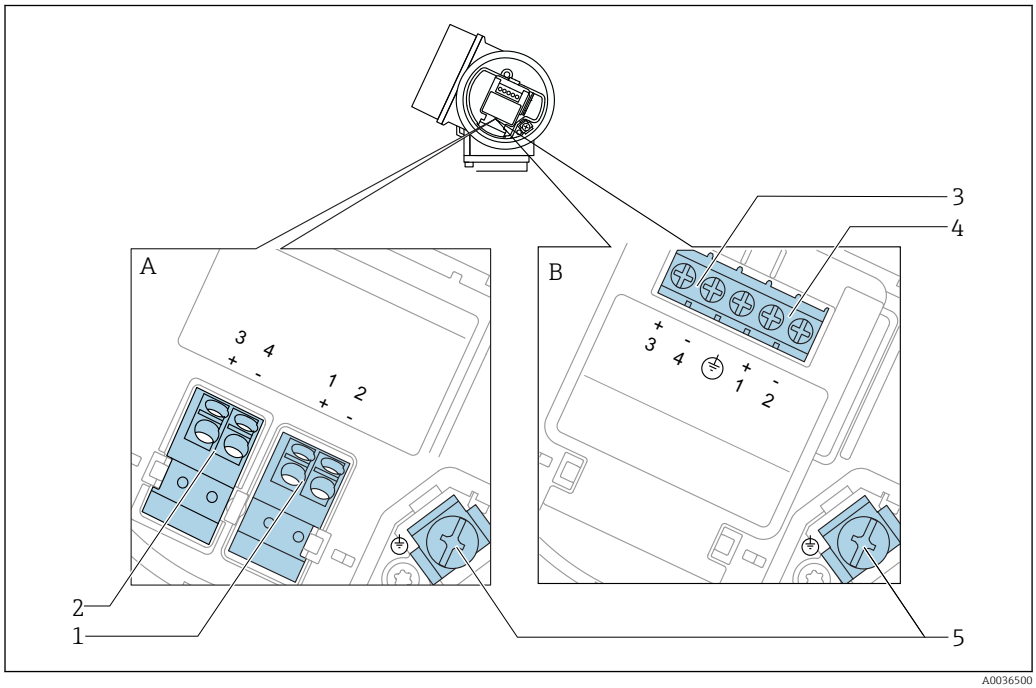

12 *Terminal assignment PROFIBUS PA / FOUNDATION Fieldbus*

A *Without integrated overvoltage protection*
B *With integrated overvoltage protection*
1 *Connection PROFIBUS PA / FOUNDATION Fieldbus: terminals 1 and 2, without integrated overvoltage protection*
2 *Connection switch output (Open Collector): terminals 3 and 4, without integrated overvoltage protection*
3 *Connection switch output (Open Collector): terminals 3 and 4, with integrated overvoltage protection*
4 *Connection PROFIBUS PA / FOUNDATION Fieldbus: terminals 1 and 2, with integrated overvoltage protection*
5 *Terminal for cable screen*

Block diagram PROFIBUS PA / FOUNDATION Fieldbus

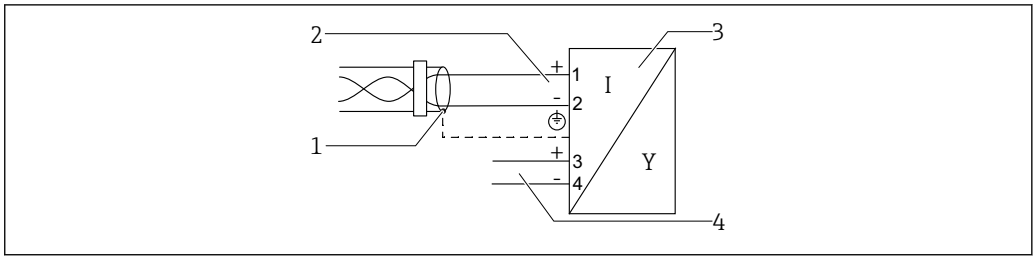

13 Block diagram PROFIBUS PA / FOUNDATION Fieldbus

1 Cable screen; observe cable specifications
2 Connection PROFIBUS PA / FOUNDATION Fieldbus
3 Measuring device
4 Switch output (open collector)

Connection examples for the switch output

For HART devices, the switch output is available as an option.

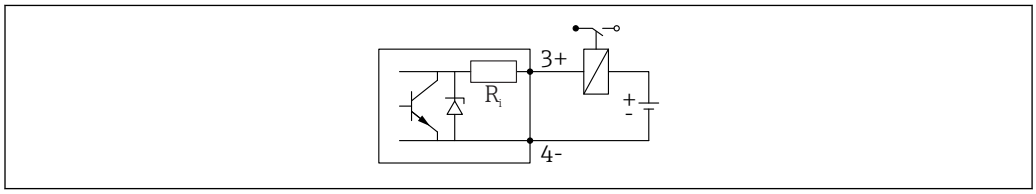

14 *Connection of a relay*

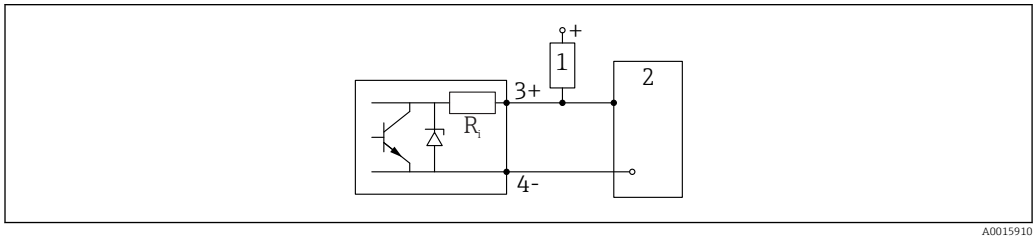

15 *Connection to a digital input*

1 *Pull-up resistor*
2 *Digital input*

For optimum interference immunity we recommend to connect an external resistor (internal resistance of the relay or pull-up resistor) of < 1 000 Ω.

Device plugs

In device versions with a device plug (M12 or 7/8"), it is not necessary to open the housing in order to connect the signal cable.

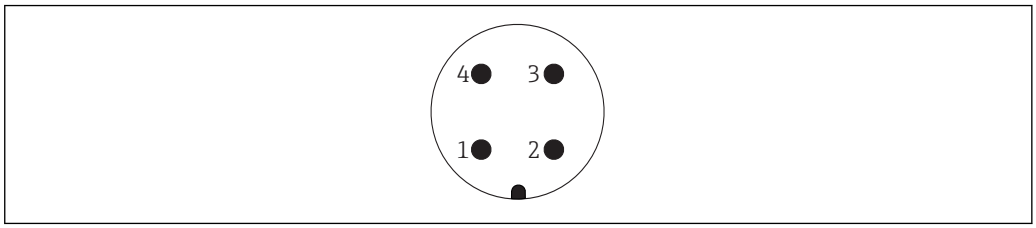

16 *Pin assignment of M12 plug*

1 *Signal +*
2 *Not assigned*
3 *Signal –*
4 *Ground*

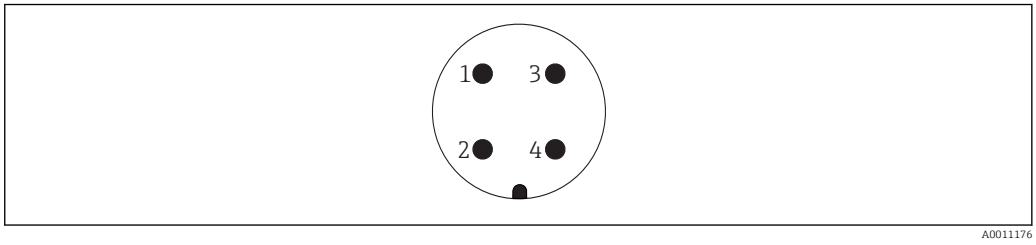

17 *Pin assignment of 7/8" plug*

1 *Signal –*
2 *Signal +*
3 *Not assigned*
4 *Shielding*

Supply voltage

An external power supply is necessary.

Various power supply units can be ordered from Endress+Hauser: see "Accessories" section

2-wire, 4-20mA HART, passive

"Power supply, output" [1]	"Approval" [2]	Terminal voltage U at device	Maximum load R, depending on the supply voltage U_0 of the power supply unit
A: 2-wire; 4-20mA HART	▪ Non-Ex ▪ Ex nA ▪ Ex ic ▪ CSA GP	10.4 to 35 V [3] [4] [5]	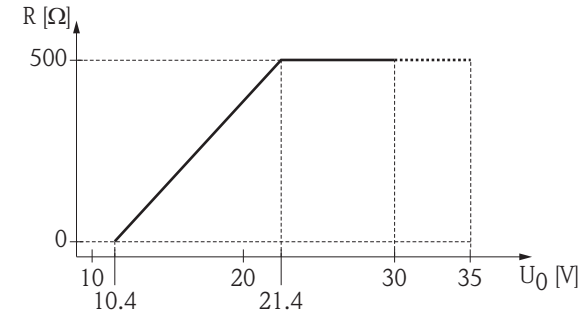
	Ex ia / IS	10.4 to 30 V [3] [4] [5]	
	▪ Ex d(ia) / XP ▪ Ex ic(ia) ▪ Ex nA(ia) ▪ Ex ta / DIP	13 to 35 V [5] [6]	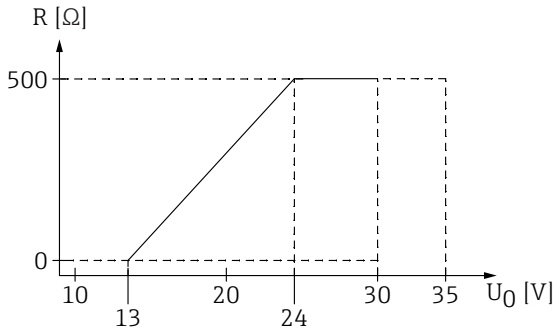
	Ex ia + Ex d(ia) / IS + XP	13 to 30 V [5] [6]	

1) Feature 020 in the product structure
2) Feature 010 in the product structure
3) At ambient temperatures $T_a \leq$ -20 °C, a terminal voltage U ≥ 15 V is required to start the device with the minimum failure current (3.6 mA). The start-up current can be configured. If the device is operated with a fixed current I ≥ 5.5 mA (HART Multidrop mode), a voltage U ≥ 10.4 V suffices in the entire ambient temperature range.
4) A voltage U ≥ 12.5 V is required in the current simulation mode.
5) If the Bluetooth module is used, the minimum supply voltage increases by 3 V.
6) At ambient temperatures $T_a \leq$ -20 °C, a terminal voltage U ≥ 16 V is required to start the device with the minimum failure current (3.6 mA).

"Power supply, output" [1]	"Approval" [2]	Terminal voltage U at device	Maximum load R, depending on the supply voltage U_0 of the power supply unit
B: 2-wire; 4-20 mA HART, switch output	▪ Non-Ex ▪ Ex nA ▪ Ex nA(ia) ▪ Ex ic ▪ Ex ic(ia) ▪ Ex d(ia) / XP ▪ Ex ta / DIP ▪ CSA GP	13 to 35 V [3] [4]	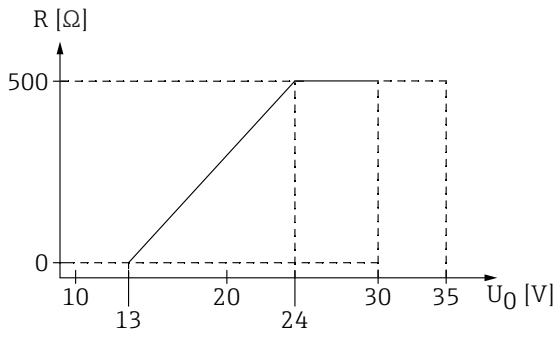
	▪ Ex ia / IS ▪ Ex ia + Ex d(ia) / IS + XP	13 to 30 V [3] [4]	

1) Feature 020 in the product structure
2) Feature 010 in the product structure
3) At ambient temperatures $T_a \leq$ -30 °C, a terminal voltage U ≥ 16 V is required to start the device with the minimum failure current (3.6 mA).
4) If the Bluetooth module is used, the minimum supply voltage increases by 3 V.

"Power supply, output" [1]	"Approval" [2]	Terminal voltage U at device	Maximum load R, depending on the supply voltage U_0 of the power supply unit
C: 2-wire; 4-20mA HART, 4-20mA	All	13 to 28 V [3] [4]	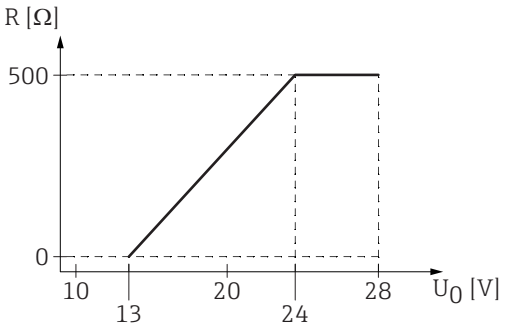

1) Feature 020 in the product structure
2) Feature 010 in the product structure
3) At ambient temperatures $T_a \leq$ -30 °C, a terminal voltage U ≥ 16 V is required to start the device with the minimum failure current (3.6 mA).
4) If the Bluetooth module is used, the minimum supply voltage increases by 3 V.

Integrated polarity reversal protection	Yes
Permitted residual ripple with f = 0 to 100 Hz	U_{SS} < 1 V
Permitted residual ripple with f = 100 to 10000 Hz	U_{SS} < 10 mV

4-wire, 4-20mA HART, active

"Power supply; output" [1]	Terminal voltage U	Maximum load R_{max}
K: 4-wire 90-253VAC; 4-20mA HART	90 to 253 V_{AC} (50 to 60 Hz), overvoltage category II	500 Ω
L: 4-wire 10.4-48VDC; 4-20mA HART	10.4 to 48 V_{DC}	

1) Feature 020 in the product structure

PROFIBUS PA, FOUNDATION Fieldbus

"Power supply; output" [1]	"Approval" [2]	Terminal voltage
E: 2-wire; FOUNDATION Fieldbus, switch output **G:** 2-wire; PROFIBUS PA, switch output	▪ Non-Ex ▪ Ex nA ▪ Ex nA(ia) ▪ Ex ic ▪ Ex ic(ia) ▪ Ex d(ia) / XP ▪ Ex ta / DIP ▪ CSA GP	9 to 32 V [3]
	▪ Ex ia / IS ▪ Ex ia + Ex d(ia) / IS + XP	9 to 30 V [3]

1) Feature 020 in the product structure
2) Feature 010 in the product structure
3) Input voltages up to 35 V do not damage the device.

Polarity-dependent	No
FISCO/FNICO compliant according to IEC 60079-27	Yes

Power consumption

"Power supply; Output" [1]	Power consumption
A: 2-wire; 4-20mA HART	< 0.9 W
B: 2-wire; 4-20mA HART, switch output	< 0.9 W
C: 2-wire; 4-20mA HART, 4-20mA	< 2 x 0.7 W
K: 4-wire 90-253VAC; 4-20mA HART	6 VA
L: 4-wire 10,4-48VDC; 4-20mA HART	1.3 W

1) Feature 020 of the product structure

Current consumption

HART

Nominal current	3.6 to 22 mA, the start-up current for multidrop mode can be parametrized (is set to 3.6 mA on delivery)
Breakdown signal (NAMUR NE43)	adjustable: 3.59 to 22.5 mA

PROFIBUS PA

Nominal current	14 mA
Failure current FDE (Fault Disconnection Electronic)	0 mA

FOUNDATION Fieldbus

Device basic current	15 mA
Failure current FDE (Fault Disconnection Electronic)	0 mA

FISCO

U_i	17.5 V
I_i	550 mA
P_i	5.5 W
C_i	5 nF
L_i	10 µH

Power supply failure

- Configuration is retained in the HistoROM (EEPROM).
- Error messages (incl. value of operated hours counter) are stored.

Potential equalization

No special measures for potential equalization are required.

If the device is designed for hazardous areas, observe the information in the documentation "Safety Instructions" (XA).

Terminals

- **Without integrated overvoltage protection**
  Plug-in spring terminals for wire cross-sections 0.5 to 2.5 mm² (20 to 14 AWG)
- **With integrated overvoltage protection**
  Screw terminals for wire cross-sections 0.2 to 2.5 mm² (24 to 14 AWG)

Cable entries

Connection of the power supply and signal cables

To be selected in feature 050 "Electrical connection":

- Coupling M20, material depends on approval:
  - For non-Ex, ATEX, IECEx, NEPSI Ex ia/ic:
    Plastic M20x1.5 for cable Ø5 to 10 mm (0.2 to 0.39 in)
  - For Dust-Ex, FM IS, CSA IS, CSA GP, Ex ec:
  - For Ex db:
    No cable gland available
- Thread
  - ½" NPT
  - G ½"
  - M20 × 1.5
- M12 plug / 7/8" plug
  Only available for non-Ex, Ex ic, Ex ia

Connection of remote display FHX50

Feature 030 "Display, operation"	Cable entry for connection of FHX50
L: "Prepared for display FHX50 + M12 connection"	M12 socket
M: "Prepared for display FHX50 + M16 cable gland, custom connection"	M12 cable gland
N: "Prepared for display FHX50 + NPT1/2 thread, custom connection"	Thread NPT1/2

Cable specification

- **Devices without integrated overvoltage protection**
  Pluggable spring-force terminals for wire cross-sections 0.5 to 2.5 mm² (20 to 14 AWG)
- **Devices with integrated overvoltage protection**
  Screw terminals for wire cross-sections 0.2 to 2.5 mm² (24 to 14 AWG)
- For ambient temperature $T_U \geq 60$ °C (140 °F): use cable for temperature T_U +20 K.

HART

- A normal device cable suffices if only the analog signal is used.
- A shielded cable is recommended if using the HART protocol. Observe grounding concept of the plant.
- For 4-wire devices: Standard device cable is sufficient for the power line.

PROFIBUS

Use a twisted, screened two-wire cable, preferably cable type A.

For further information on the cable specifications, see Operating Instructions BA00034S "PROFIBUS DP/PA: Guidelines for planning and commissioning", PNO Guideline 2.092 "PROFIBUS PA User and Installation Guideline" and IEC 61158-2 (MBP).

FOUNDATION Fieldbus

Endress+Hauser recommends using twisted, shielded two-wire cables.

For further information on the cable specifications, see Operating Instructions BA00013S "FOUNDATION Fieldbus Overview", FOUNDATION Fieldbus Guideline and IEC 61158-2 (MBP).

Overvoltage protection

If the measuring device is used for level measurement in flammable liquids which requires the use of overvoltage protection according to DIN EN 60079-14, standard for test procedures 60060-1 (10 kA, pulse 8/20 µs), an overvoltage protection module has to be installed.

Integrated overvoltage protection module

An integrated overvoltage protection module is available for 2-wire HART as well as PROFIBUS PA and FOUNDATION Fieldbus devices.

Product structure: Feature 610 "Accessory mounted", option NA "Overvoltage protection".

Technical data	
Resistance per channel	2 × 0.5 Ω max.
Threshold DC voltage	400 to 700 V
Threshold impulse voltage	< 800 V
Capacitance at 1 MHz	< 1.5 pF
Nominal arrest impulse voltage (8/20 µs)	10 kA

External overvoltage protection module

HAW562 or HAW569 from Endress+Hauser are suited as external overvoltage protection.

Performance characteristics

Reference operating conditions

- Temperature = +24 °C (+75 °F) ±5 °C (±9 °F)
- Pressure = 960 mbar abs. (14 psia) ±100 mbar (±1.45 psi)
- Humidity = 60 % ±15 %
- Reflector: metal plate with a diameter ≥ 1 m (40 in)
- No major interference reflections inside the signal beam

Maximum measured error

Typical data under reference operating conditions: DIN EN IEC 61298-2 / DIN EN IEC 60770-1; percentage values in relation to the span.

Device version	Value	Output	
		digital	analog [1]
Standard	Sum of non-linearity, non-repeatability and hysteresis	± 2 mm (0.08 in)	± 0.02 %
	Offset/Zero	± 4 mm (0.2 in)	± 0.03 %
Version with the "Advanced dynamics" application package	Sum of non-linearity, non-repeatability and hysteresis	± 3 mm (0.12 in)	± 0.02 %
	Offset/Zero	± 4 mm (0.2 in)	± 0.03 %

1) Only relevant for 4-20mA current output; add error of the analog value to the digital value

Differing values in near-range applications

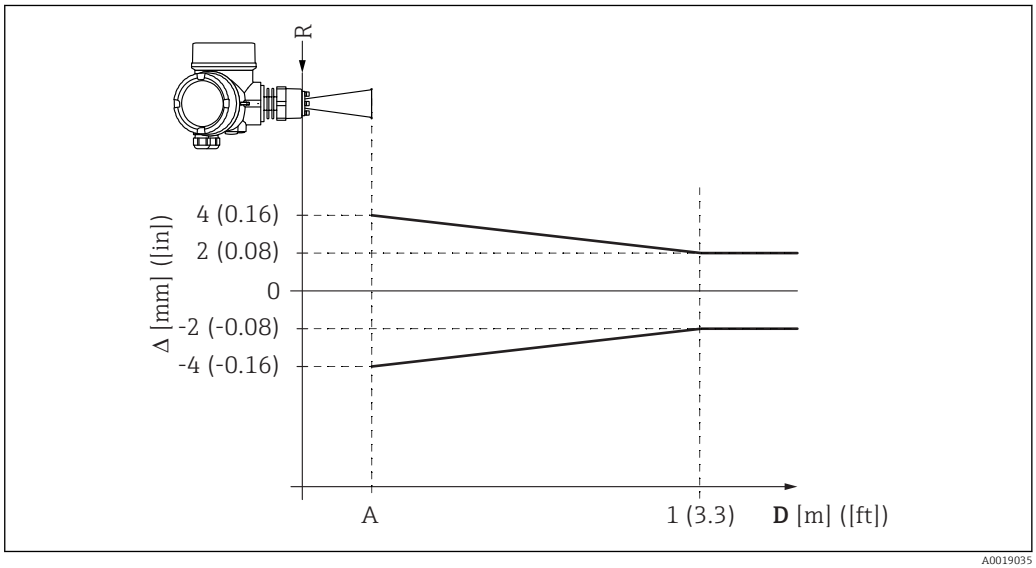

18 Maximum measured error in near-range applications; values for standard version

Δ Maximum measured error
A Lower edge of the antenna
D Distance from the lower edge A of the antenna
R Reference point of the distance measurement

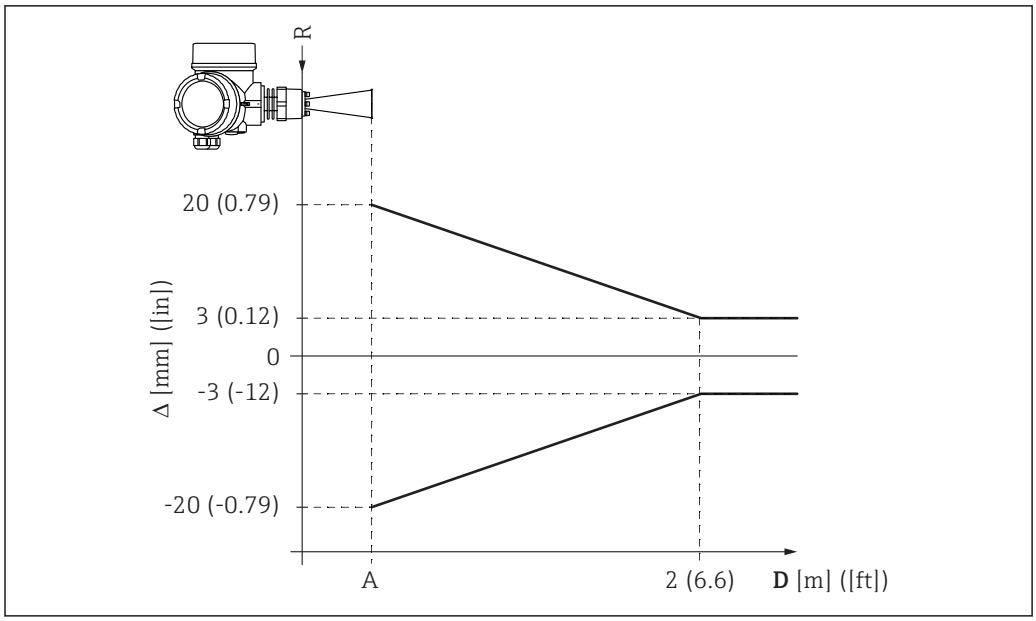

19 *Maximum measured error in near-range applications; values for version with the "Advanced dynamics" application package*

Δ Maximum measured error
A Lower edge of the antenna
D Distance from the lower edge A of the antenna
R Reference point of the distance measurement

Measured value resolution

Dead band according to DIN EN IEC 61298-2 / DIN EN IEC 60770-1:

- Digital: 1 mm
- Analog: 1 µA

Response time

The response time can be configured. The following step response times (in accordance with DIN EN IEC 61298-2 / DIN EN IEC 60770-1) [1] are when damping is switched off:

Tank height	Sampling rate	Response time
< 10 m (33 ft)	≥3.6 s^{-1}	< 0.8 s
< 70 m (230 ft)	≥2.2 s^{-1}	< 1 s

Influence of ambient temperature

The measurements are performed according to DIN EN IEC 61298-3 / DIN EN IEC 60770-1

- Digital (HART, PROFIBUS PA, FOUNDATION Fieldbus):
  - Standard version: average T_C = 2 mm/10 K
  - Version with advanced dynamics: average T_C = 3 mm/10 K
- Analog (current output):
  - Zero point (4 mA): average T_C = 0.02 %/10 K
  - Span (20 mA): average T_C = 0.05 %/10 K

Influence of gas phase

High pressure reduces the speed of propagation of the measuring signals in the gas/vapor above the medium. This effect depends on the type of gas phase and its temperature. This results in a systematic measured error that increases with increasing distance between the reference point of the measurement (flange) and the surface of the product. The following table shows this measured

1) According to DIN EN IEC 61298-2 / DIN EN IEC 60770-1, the step response time is the time that elapses after an abrupt change in the input signal until the change in the output signal has adopted 90% of the steady-state value for the first time.

error for a few typical gases/vapors (with regard to the distance, a positive value means that a too large distance is measured):

Gas phase	Temperature	Pressure				
		1 bar (14.5 psi)	10 bar (145 psi)	50 bar (725 psi)	100 bar (1 450 psi)	160 bar (2 320 psi)
Air/nitrogen	20 °C (68 °F)	0.00 %	0.22 %	1.2 %	2.4 %	3.89 %
	200 °C (392 °F)	–0.01 %	0.13 %	0.74 %	1.5 %	2.42 %
	400 °C (752 °F)	–0.02 %	0.08 %	0.52 %	1.1 %	1.70 %
Hydrogen	20 °C (68 °F)	–0.01 %	0.10 %	0.61 %	1.2 %	2.00 %
	200 °C (392 °F)	–0.02 %	0.05 %	0.37 %	0.76 %	1.23 %
	400 °C (752 °F)	–0.02 %	0.03 %	0.25 %	0.53 %	0.86 %
Water (saturated steam)	100 °C (212 °F)	0.02 %	-	-	-	-
	180 °C (356 °F)	-	2.1 %	-	-	-
	263 °C (505 °F)	-	-	8.6 %	-	-
	310 °C (590 °F)	-	-	-	22 %	-
	364 °C (687 °F)	-	-	-	-	41.8 %

With a known, constant pressure, it is possible to compensate for this measured error with a linearization, for example.

Gas phase compensation with external pressure sensor (PROFIBUS PA, FOUNDATION Fieldbus)

PROFIBUS devices can receive the signal from an external pressure sensor over the bus and use it to automatically perform a pressure-dependent time-of-flight correction. In the case of saturated steam in the temperature range from 100 to 350 °C (212 to 662 °F), this makes it possible to reduce the distance measurement error of up to 29 % (without compensation) to below 3 % (with compensation).

Installation

Installation conditions

Orientation

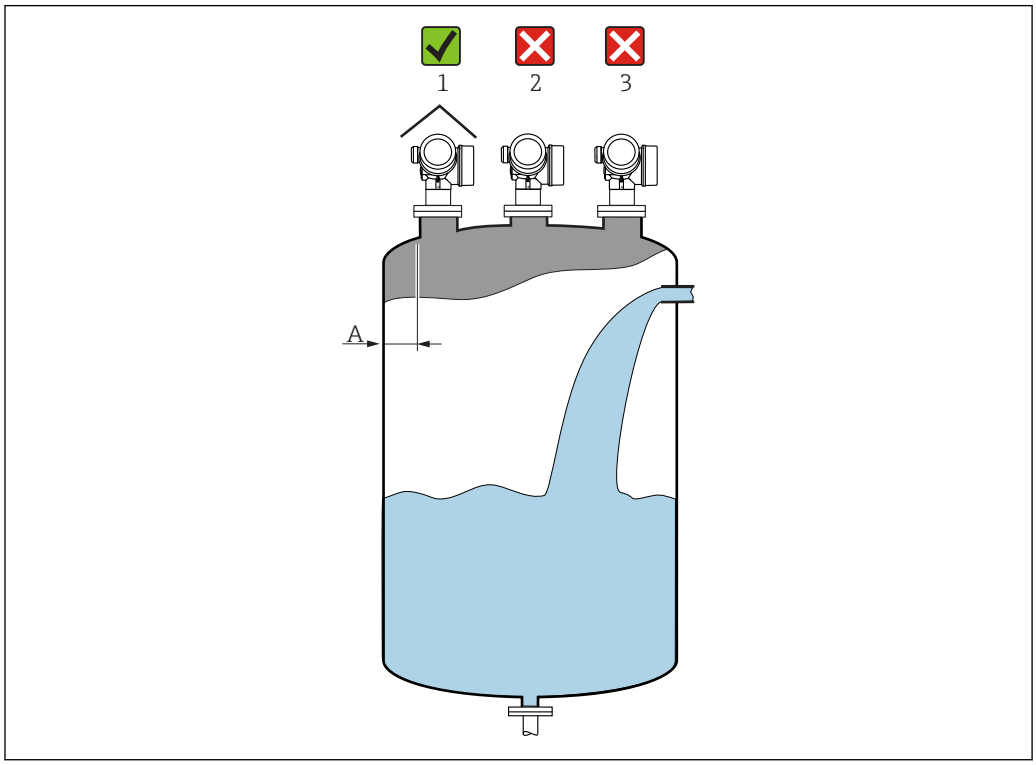

A0016882

- Recommended distance **A** wall - nozzle outer edge: ~ 1/6 of the vessel diameter. However, the device must not under any circumstances be mounted closer than 15 cm (5.91 in) to the tank wall.
- Not in the center (2) as interference can cause signal loss.
- Not above the filling curtain (3).
- The use of a weather protection cover (1) is recommended to protect the transmitter from direct sunlight or rain.

Internal vessel fittings

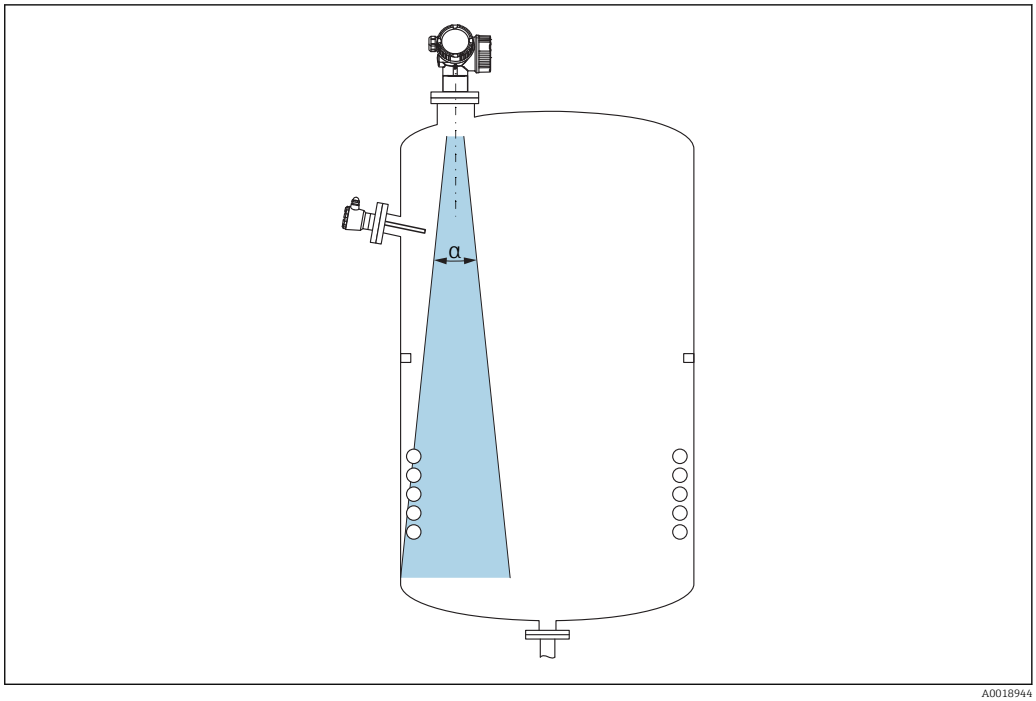

A0018944

Avoid the location of internal fittings (limit switches, temperature sensors, struts, vacuum rings, heating coils, baffles etc.) inside the signal beam. Take the beam angle into account.

Avoiding interference echoes

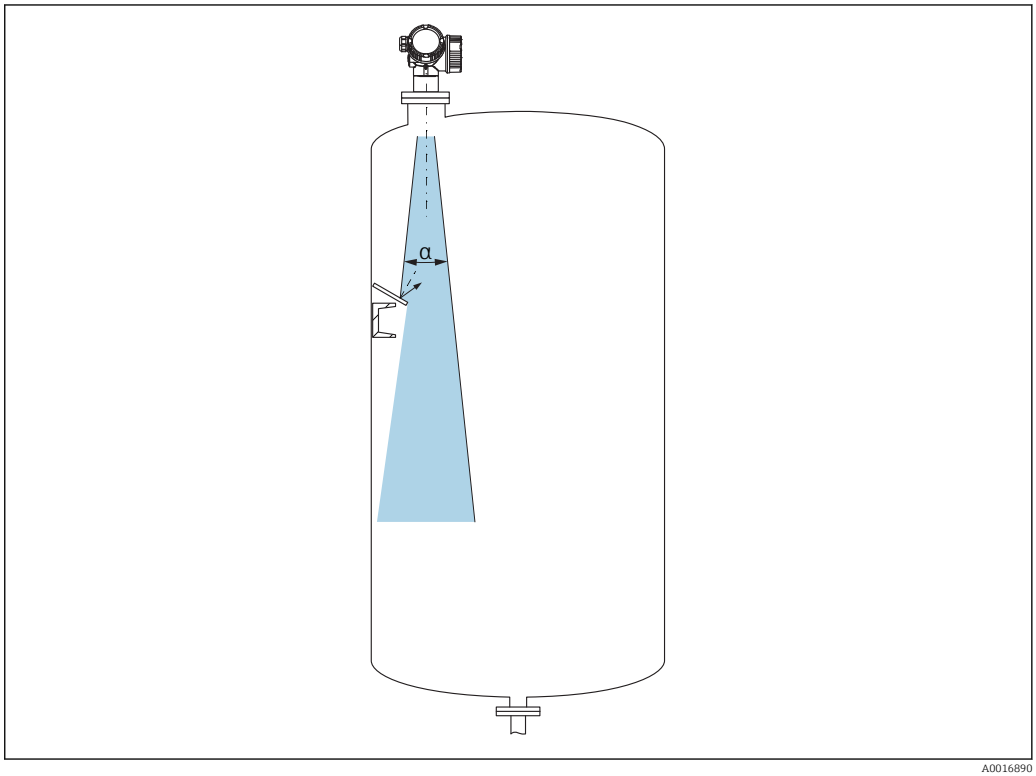

A0016890

Metal orifice plates, installed at an angle to scatter the radar signals, help prevent interference echoes.

Measurement in a plastic vessel

If the outer wall of the vessel is made of a non-conductive material (e.g. GFRP) microwaves can also be reflected off interfering installations outside of the vessel (e.g. metallic pipes (1), ladders (2), grates (3) etc.). Therefore there should be no such interfering installations in the signal beam.

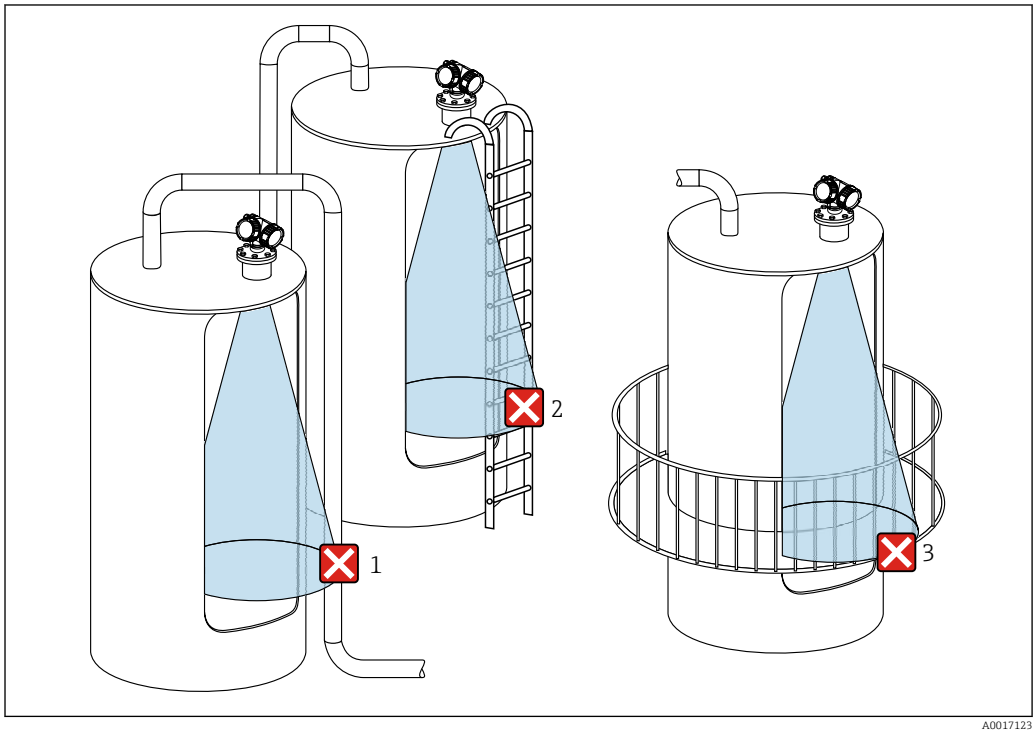

Optimization options

- Antenna size
  The larger the antenna the smaller the beam angle α, resulting in fewer interference echoes.
- Interference echo suppression (mapping)
  Measurement can be optimized by electronically suppressing interference echoes
- Take into account the orientation of the antenna, the marking on the flange or threaded connection
- A stilling well can be used to avoid interference influences
- Metallic plates mounted at an angle
  These plates scatter the radar signals and can therefore reduce interference echoes.

Beam angle

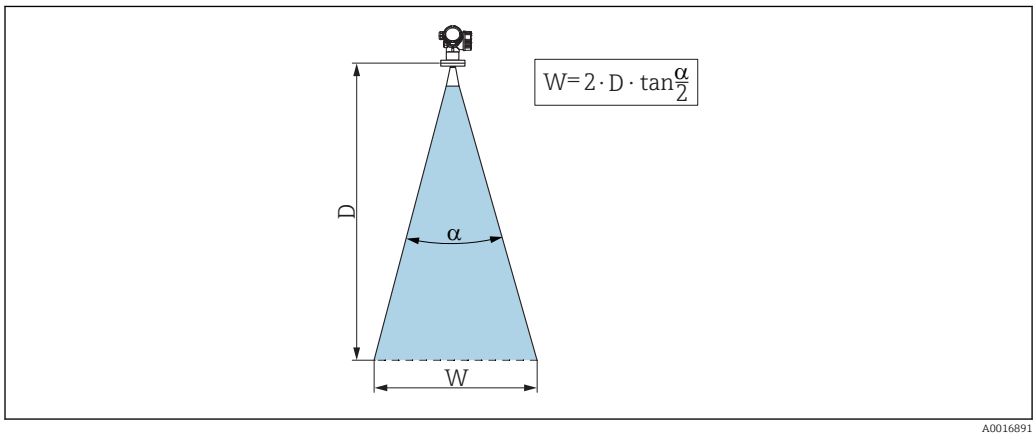

20 Relationship between beam angle α, distance D and beamwidth diameter W

The beam angle is defined as the angle α where the energy density of the radar waves reaches half the value of the maximum energy density (3dB width). Microwaves are also emitted outside the signal beam and can be reflected off interfering installations.

Beam diameter **W** as a function of beam angle **α** and distance **D**.

50 mm (2 in) antenna, α 18 °
W = D × 0.32

80 mm (3 in) antenna, α 10 °
W = D × 0.18

Process conditions

- Preferably use the FMR53 or FMR54 for **boiling surfaces**, **bubble formation** or tendency towards **foam formation**. Depending on its consistency, foam can absorb microwaves or reflect them at the foam surface. Measurements are possible under certain conditions. The additional option "Advanced dynamics" is recommended for FMR50, FMR51 and FMR52 in these cases (feature 540: "Application packages", option EM).
- In the event of strong **development of steam** or **condensate**, the max. measuring range of FMR50, FMR51 and FMR52 may decrease depending on the density, temperature and composition of the steam → use FMR53 or FMR54.
- To measure absorbing gases such as **ammonia NH_3** or some **fluorocarbons**, use the Levelflex or Micropilot FMR54 in a stilling well.
  ℹ The connections affected include R134a, R227, Dymel 152a for example.
- The measuring range begins where the beam hits the tank bottom. Levels below this point cannot be detected, particularly in the case of torispherical heads or conical outlets.
- In stilling well applications, it is important to consider that the electromagnetic waves do not propagate completely outside the pipe. Reduced accuracy must be expected within range **C**. If this is not acceptable, we recommend positioning the zero point at a distance **C** above the end of the pipe (see Figure) in these applications.
- In the case of media with a low ε_r = 1.5 to 4, the tank bottom may be visible through the medium at low levels (less than level **C**). Reduced accuracy must be expected in this range. If this is not acceptable, we recommend positioning the zero point at a distance **C** above the tank floor (see Figure) in these applications.
  ℹ The dielectric constants (ε_r values) for many key media used in industry are provided in the DC Manual (CP00019F) and in Endress+Hauser's "DC Values App" (available for Android and iOS).
- In principle it is possible to measure up to the tip of the antenna with FMR51, FMR53 and FMR54. However, due to considerations regarding corrosion and build-up, the end of the measuring range should not be any closer than **A** (see Figure) to the tip of the antenna. In the case of FMR50 and FMR52, the end of the measuring range should not be any closer than **A** (see Figure) to the tip of the antenna, particularly in the event of condensate formation.
- When using FMR54 with a planar antenna, the end of the measuring range should not be closer than **A: 1 m (3.28 ft)** to the flange, especially in the case of media with a low dielectric constant.
- The vessel height should be at least **H** (see Table).

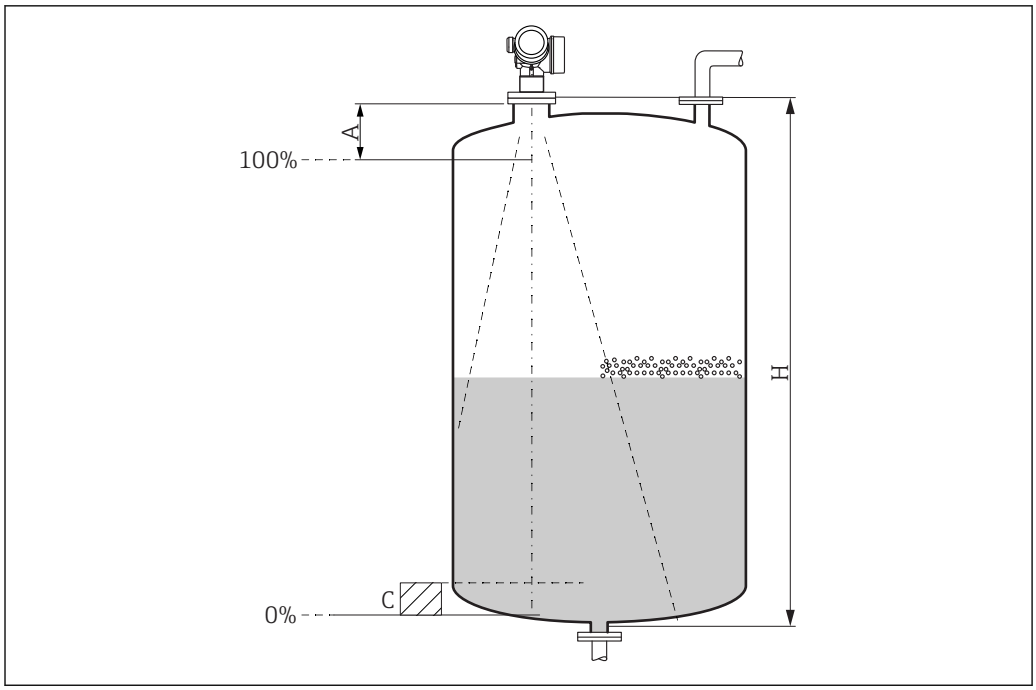

A *Antenna length + 50 mm (2 in); min. 200 mm (7.87 in)*
C *50 to 250 mm (1.97 to 9.84 in); (water-based medium up to ε_r = 2)*
H *> 1.5 m (4.92 ft)*

Mounting cladded flanges

Note the following for cladded flanges:
- Use the same number of flange screws as the number of flange bores provided.
- Tighten the screws with the necessary torque (see Table).
- Retighten after 24 hours or after the first temperature cycle.
- Depending on the process pressure and temperature, check and retighten the screws, where necessary, at regular intervals.

The PTFE flange cladding normally acts simultaneously as a seal between the nozzle and the device flange.

Flange size	Number of screws	Tightening torque
EN		
DN50/PN16	4	45 to 65 Nm
DN80/PN16	8	40 to 55 Nm
DN80/PN40	8	999 to 999 Nm
DN100/PN16	8	40 to 60 Nm
DN150/PN16	8	75 to 115 Nm
ASME		
2"/150lbs	4	40 to 55 Nm
3"/150lbs	4	65 to 95 Nm
3"/300lbs	8	40 to 55 Nm
4"/150lbs	8	45 to 70 Nm
4"/300lbs	8	55 to 80 Nm
6"/150lbs	8	85 to 125 Nm
6"/300lbs	12	999 to 999 Nm

Flange size	Number of screws	Tightening torque
JIS		
10K 50A	4	40 to 60 Nm
10K 80A	8	25 to 35 Nm
10K 100A	8	35 to 55 Nm
10K 150A	8	75 to 115 Nm

Free-space installation in vessel

Horn antenna (FMR51)

Alignment

- Align the antenna so that it is perpendicular to the product surface.
  The maximum reach of the antenna can be reduced if it is not installed perpendicular to the product.
- A marking is provided on the flange (at a point between the flange holes), the threaded connection or the gland to aid the alignment. This marking must be aligned towards the tank wall as much as possible.

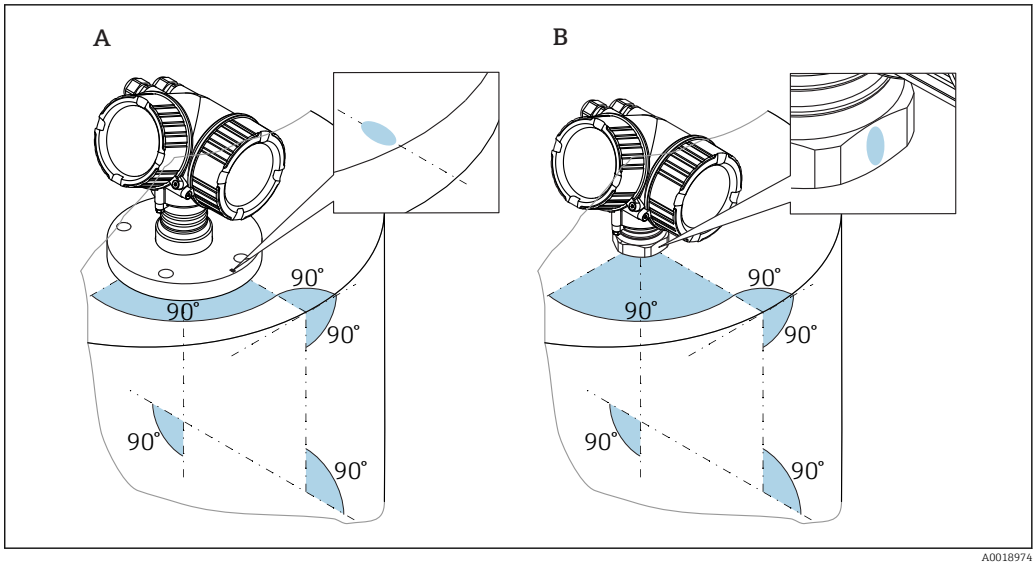

A0018974

Depending on the device version the marking may be a circle or two parallel lines.

Information concerning nozzles

The antenna should project out of the nozzle for optimum measurement. Depending on the antenna size, this is achieved by the following maximum nozzle heights:

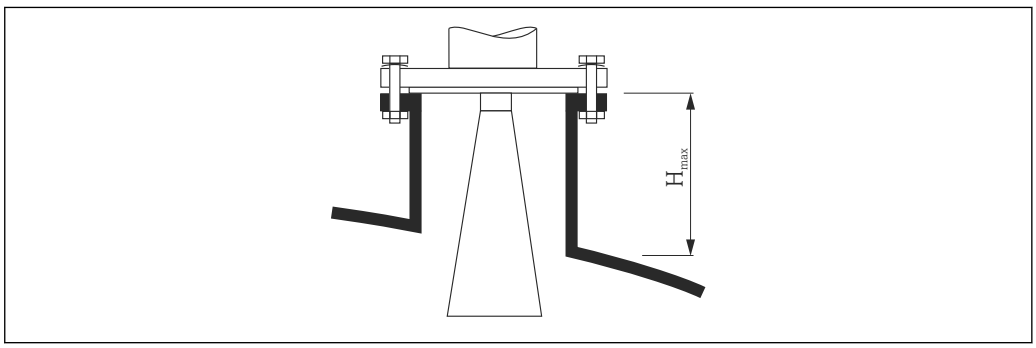

A0016820

21 *Nozzle height for horn antenna (FMR51)*

Antenna	Maximum nozzle height H_{max}
Horn 40mm/1-1/2"	86 mm (3.39 in)
Horn 50mm/2"	115 mm (4.53 in)
Horn 80mm/3"	211 mm (8.31 in)
Horn 100mm/4"	282 mm (11.1 in)

Conditions for longer nozzles

If the medium has good reflective properties, higher nozzles are also possible. The maximum nozzle length H_{max} depends on the nozzle diameter D:

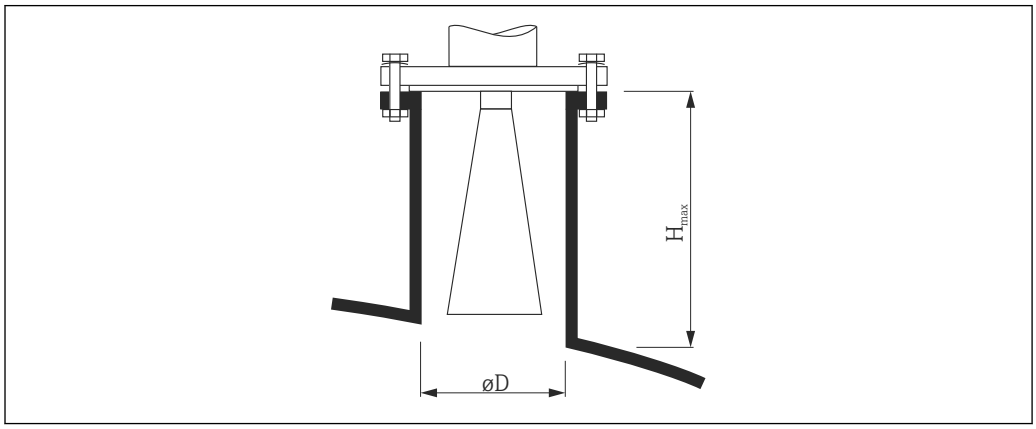

A0023611

Nozzle diameter D	Maximum nozzle height H_{max}	Recommended antenna
40 mm (1.5 in)	100 mm (3.9 in)	Horn 40mm/1-1/2"
50 mm (2 in)	150 mm (5.9 in)	Horn 50mm/2"
80 mm (3 in)	250 mm (9.8 in)	Horn 80mm/3"
100 mm (4 in)	500 mm (19.7 in)	Horn 100mm/4"
150 mm (6 in)	800 mm (31.5 in)	Horn 100mm/4"

Note the following if the antenna does not project out of the nozzle:
- The end of the nozzle must be smooth and free from burrs. The edge of the nozzle should be rounded if possible.
- Mapping must be performed.
- Please contact Endress+Hauser for applications with nozzles that are higher than indicated in the table.

- For mounting in long nozzles, the device is available with an antenna extension of up 1 000 mm (39.4 in) (accessory). This allows the antenna to project out of the nozzle.
- The antenna extension may cause interference echoes in the near range. This means that the maximum measurable level may be reduced.

Information concerning threaded connections

For devices with a threaded connection, it may be necessary - depending on the antenna size - to first disassemble the horn and then mount it again after screwing in the device.

- When screwing in, turn by the hex bolt only.
- Tool: open-ended wrench 55 mm
- Maximum permissible torque: 60 Nm (44 lbf ft)

Measurement from the outside through plastic walls (FMR50/FMR51)

- Dielectric constant of the medium: $\varepsilon_r > 10$
- If possible use an antenna 100 mm (4 in).
- The distance from the tip of the antenna to the tank should be approx. 100 mm (4 in).
- If possible, avoid installation positions in which condensate or buildup can form between the antenna and the vessel.
- In the case of outdoor installations, ensure that the area between the antenna and the tank is protected from the weather.
- Do not install any fittings or attachments between the antenna and the tank that could reflect the signal.

Suitable thickness of the tank ceiling:

Penetrated material	PE	PTFE	PP	Plexiglass
ε_r	2.3	2.1	2.3	3.1
Optimum thickness	3.8 mm (0.15 in)	4.0 mm (0.16 in)	3.8 mm (0.15 in)	3.3 mm (0.13 in)
Other values for the thickness are multiples of the values listed (e.g. PE: 7.6 mm (0.3 in), 11.4 mm (0.45 in)				

Horn antenna, flush mount (FMR52)

Alignment

- Align the antenna so that it is perpendicular to the product surface.
  The maximum reach of the antenna can be reduced if it is not installed perpendicular to the product.
- A marking is provided on the flange (at a point between the flange holes) or the gland to aid the alignment. This marking must be aligned towards the tank wall as much as possible.

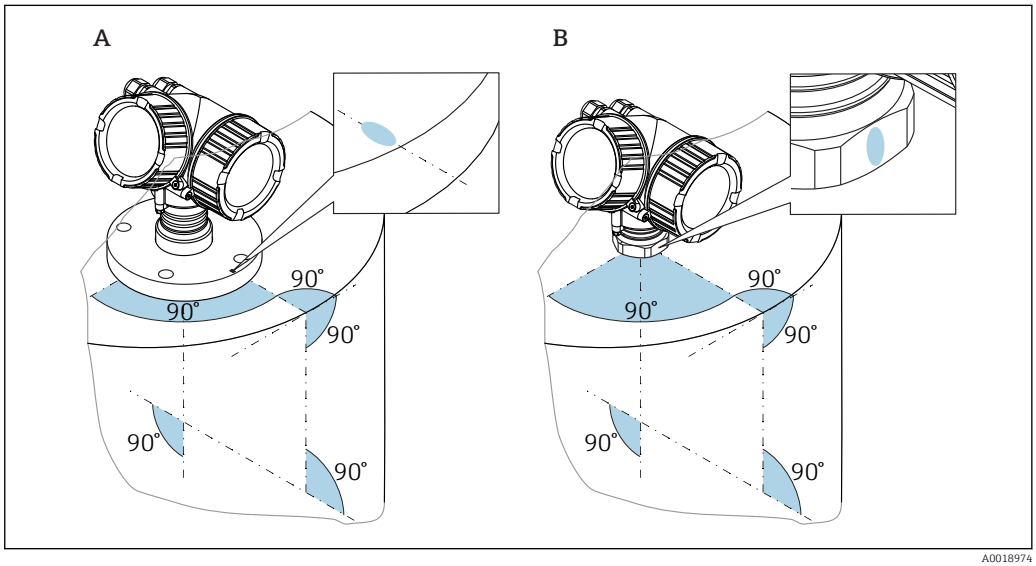

A0018974

Depending on the device version the marking may be a circle or two parallel lines.

Information concerning nozzles

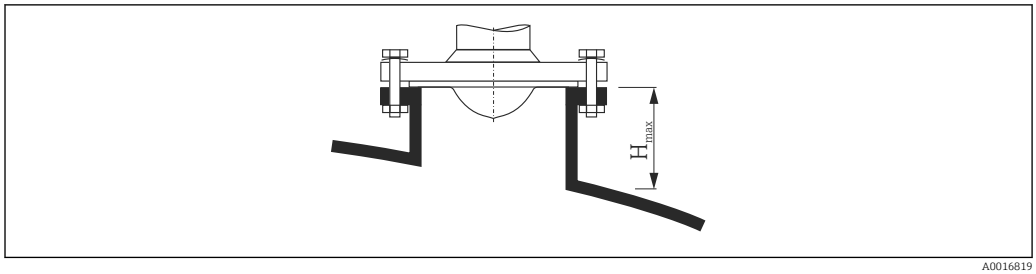

A0016819

22 Nozzle height for horn antenna, flush mount (FMR52)

Antenna	Maximum nozzle height H_{max}
Horn 50mm/2"	500 mm (19.7 in)
Horn 80mm/3"	500 mm (19.7 in)

- For flanges with PTFE cladding: Observe the instructions for mounting cladded flanges
- The PTFE flange cladding normally acts simultaneously as a seal between the nozzle and the device flange
- Please contact the manufacturer's support service for applications with nozzles that are higher than indicated in the table.

Installation in stilling well

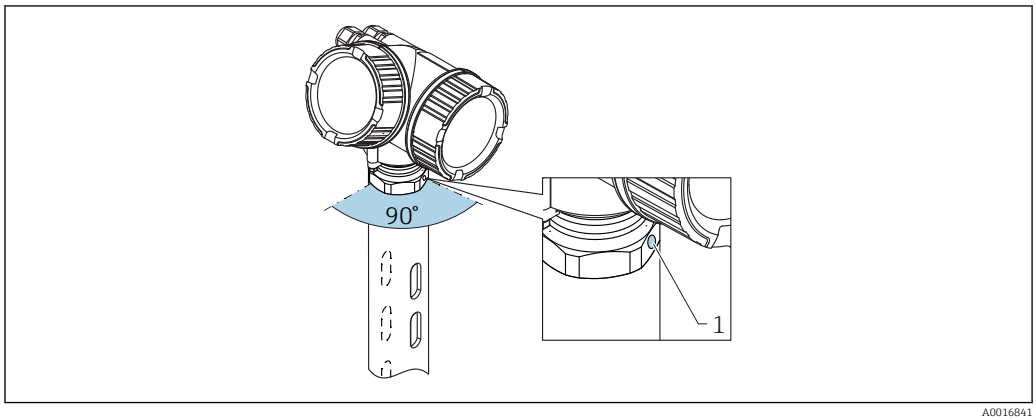

A0016841

23 Installation in stilling well

1 Marking to align the antenna

- For the horn antenna: align the marking towards the slot.
- Measurements can be performed through an open full bore ball valve without any problems.
- After mounting, the housing can be turned 350 ° in order to facilitate access to the display and the terminal compartment.

Recommendations for the stilling well

- Metal (no enamel liner; plastic liner on request).
- Constant diameter.
- Stilling well not larger than antenna diameter.
- Difference in diameter between horn antenna and inner diameter of the stilling well as small as possible.
- Weld seam as smooth as possible and on the same axis as the slot.
- Slot offset by 180° (not 90°).
- Slot width or diameter of holes max. 1/10 of pipe diameter, deburred. The length and number do not affect the measurement.
- Select a horn antenna that is as big as possible. For intermediate sizes (e.g. 180 mm (7 in)) select the next biggest antenna and adapt it mechanically (for horn antennas).
- At transition points, e.g. when a ball valve is used or individual pipe segments are joined, any gaps that occur should not exceed 1 mm (0.04 in).

- The stilling well must be smooth on the inside (average roughness $R_a \leq 6.3$ µm (248 µin)). Use an extruded or parallel-welded metal pipe as the measuring pipe. The pipe can be extended with welding neck flanges or pipe sleeves. Flush-align the flange and pipe properly on the inside.
- Do not weld through the pipe wall. The inside of the stilling well must remain smooth. If the pipe is welded through unintentionally, carefully remove and smoothen any weld seams and unevenness on the inside, as otherwise this will cause strong interference echoes and encourage material buildup.
- In the case of small nominal diameters, in particular, ensure that the flanges are welded to the pipe correctly in line with the orientation (marking aligned towards slot).

Example for the design of a stilling well

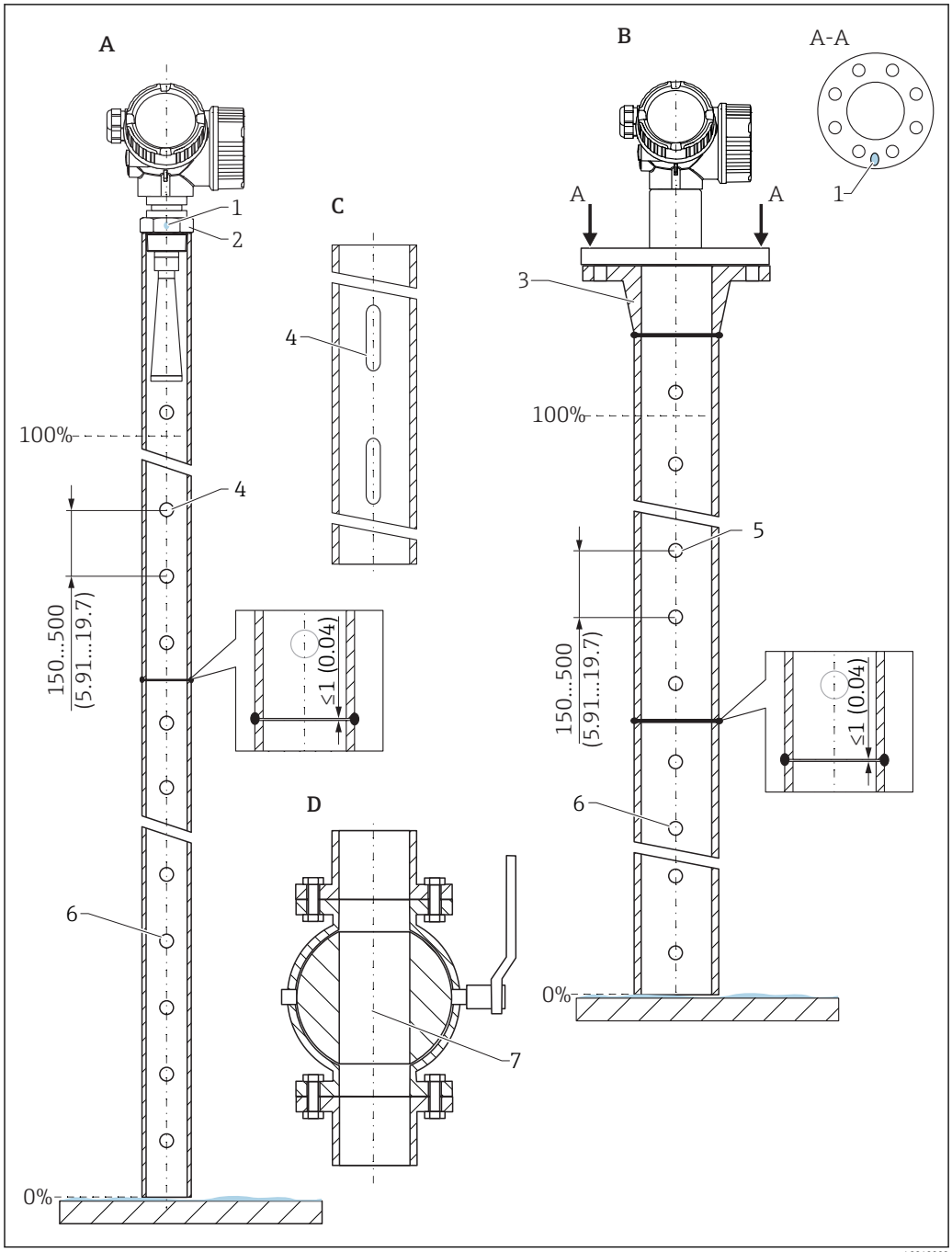

A0019009

A Micropilot FMR50/FMR51: horn 40 mm (1½")
B Micropilot FMR50/FMR51/FMR52/FMR54: horn 80 mm (3")
C Stilling well with slots
D Full bore ball valve
1 Marking for axial alignment
2 Threaded connection
3 e.g. welding neck flange DIN2633
4 Ø bore max. 1/10 Ø pipe
5 Ø bore max. 1/10 Ø pipe; on one side or drilled through
6 Borehole always deburred
7 Opening diameter of ball valve must always correspond to the pipe diameter; avoid edges and constrictions.

Installation in the bypass

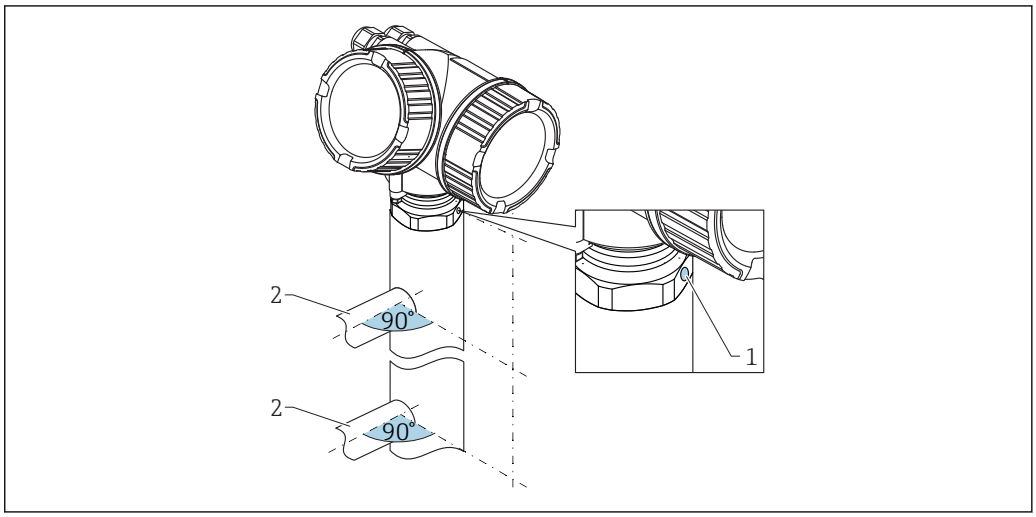

24 Installation in the bypass

1 Marking to align the antenna
2 Tank connectors

- Align the marker at a 90 ° angle to the tank connectors.
- Measurements can be performed through an open full bore ball valve without any problems.
- After mounting, the housing can be turned 350 ° in order to facilitate access to the display and the terminal compartment.

Recommendations for the bypass

- Metal (no enamel plastic or enamel liner).
- Constant diameter.
- Select a horn antenna that is as big as possible. For intermediate sizes (e.g. 95 mm (3.5 in)) select the next biggest antenna and adapt it mechanically (for horn antennas).
- Difference in diameter between horn antenna and inner diameter of the bypass as small as possible.
- At transition points, e.g. when a ball valve is used or individual pipe segments are joined, any gaps that occur should not exceed 1 mm (0.04 in).
- Reduced measuring accuracy can be expected in the area of the tank connectors (~ ±20 cm (7.87 in)).

Example for the design of a bypass

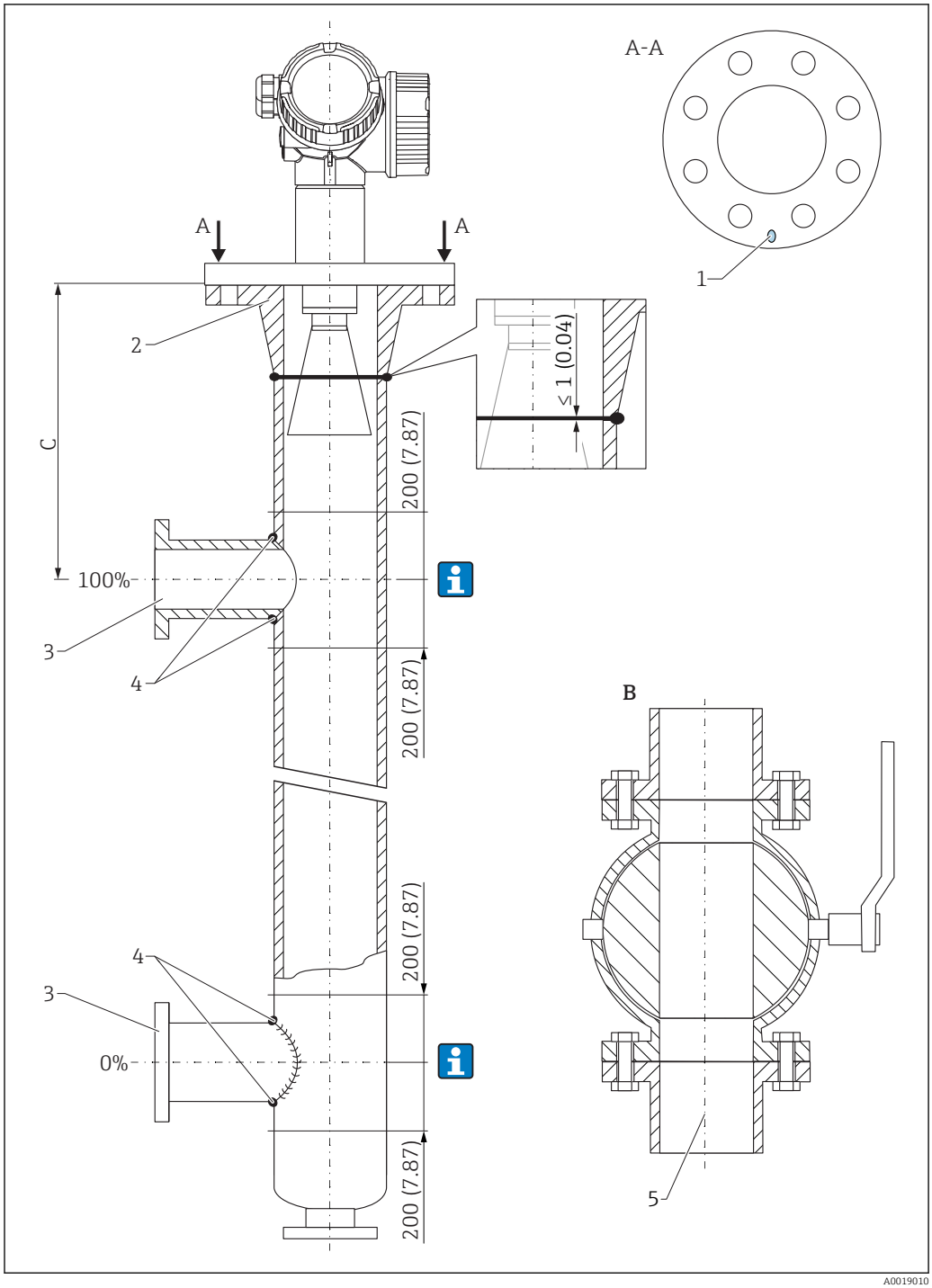

A Micropilot FMR50/FMR51/FMR52/FMR54: horn 80 mm (3")
B Full bore ball valve
C Minimum distance to upper connecting pipe: 400 mm (15.7 in)
1 Marking for axial alignment
2 e.g. welding neck flange DIN2633
3 Diameter of connecting pipes as small as possible
4 Do not weld through the pipe wall; the inside of the pipe must remain smooth.
5 Opening diameter of ball valve must always correspond to the pipe diameter. Avoid edges and constrictions.

Container with heat insulation

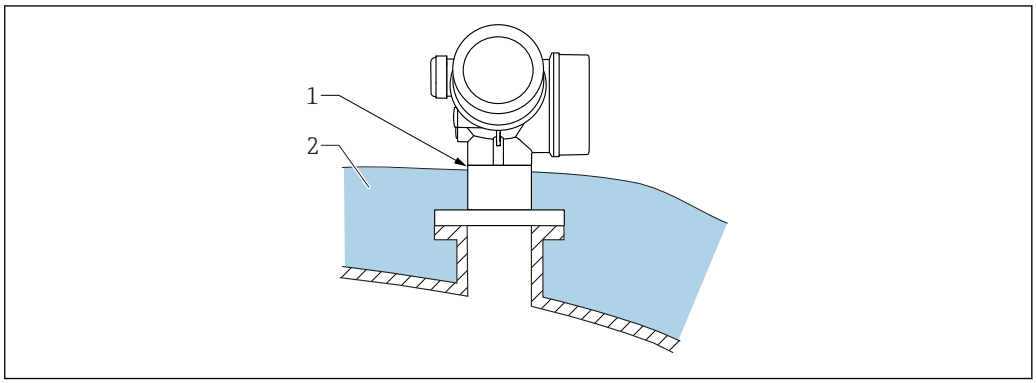

A0032207

If process temperatures are high, the device should be included in the usual container insulation system (2) to prevent the electronics from heating as a result of thermal radiation or convection. The insulation should not be higher than the neck of the device (1).

Environment

Temperature range

Measuring device	−40 to +80 °C (−40 to +176 °F); −50 °C (−58 °F) with manufacturer declaration on request
Measuring device (option for FMR51, FMR52 and FMR54)	−50 to +80 °C (−58 to +176 °F) [1]
Local display	−20 to +70 °C (−4 to +158 °F), the readability of the display may be impaired at temperatures outside the temperature range.
Remote display FHX50	−40 to 80 °C (−40 to 176 °F)
Remote display FHX50 (option)	−50 to 80 °C (−58 to 176 °F) [1]

1) This range applies if the option JN "Transmitter ambient temperature −50 °C (−58 °F)" has been selected in order code 580 "Test, certificate. If the temperature is permanently below −40 °C (−40 °F), the chance of failure increases.

For outdoor operation in strong sunlight:
- Mount the device in the shade.
- Avoid direct sunlight, particularly in warm climatic regions.
- Use a weather protection cover (see accessories).

Temperature limit

The following diagrams only consider functional aspects. Additional restrictions may apply for certified device versions.

In the event of temperature (T_p) at the process connection, the permitted ambient temperature (T_a) is reduced as indicated in the following diagram (temperature derating) in the table header.

Information on the following derating tables

Feature version	Meaning
A	2-wire; 4-20 mA HART
B	2-wire; 4-20 mA HART, switch output
C	2-wire; 4-20 mA HART, 4-20 mA
E	2-wire; FF, switch output
G	2-wire; PA, switch output
K	4-wire 90-253VAC; 4-20 mA HART
L	4-wire 10, 4-48VDC; 4-20 mA HART

FMR51

Seal:
- **Viton GLT, −40 to 150 °C (−40 to 302 °F)**
- **Kalrez, −20 to 150 °C (−4 to 302 °F)**

Housing GT18 (316 L)
Temperature specifications: °C (°F)

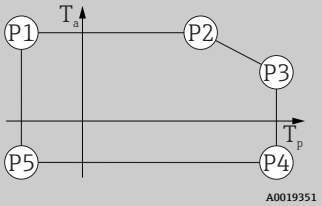

Power supply; output (item 2 in the product structure)	P1		P2		P3		P4		P5		P6	
	T_p	T_a	T_p	T_a	T_p	T_a	T_p	T_a	T_p	T_a	T_p	T_a
A	-40 (-40)	81 (178)	81 (178)	81 (178)	150 (302)	66 (151)	150 (302)	-40 (-40)	-40 (-40)	-40 (-40)	-	-
B Switch output not used	-40 (-40)	82 (180)	82 (180)	82 (180)	150 (302)	67 (153)	150 (302)	-40 (-40)	-40 (-40)	-40 (-40)	-	-
B Switch output used	-40 (-40)	77 (171)	77 (171)	77 (171)	150 (302)	61 (142)	150 (302)	-40 (-40)	-40 (-40)	-40 (-40)	-	-

FMR51

Seal:
- **Viton GLT, –40 to 150 °C (–40 to 302 °F)**
- **Kalrez, –20 to 150 °C (–4 to 302 °F)**

Housing GT18 (316 L)
Temperature specifications: °C (°F)

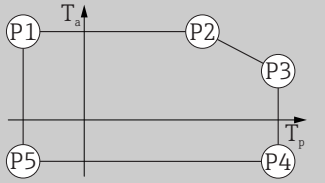

Power supply; output (item 2 in the product structure)	P1		P2		P3		P4		P5		P6	
	T_p	T_a	T_p	T_a	T_p	T_a	T_p	T_a	T_p	T_a	T_p	T_a
C Channel 2 not used	-40 (-40)	82 (180)	82 (180)	82 (180)	150 (302)	67 (153)	150 (302)	-40 (-40)	-40 (-40)	-40 (-40)	-	-
C Channel 2 used	-40 (-40)	79 (174)	79 (174)	79 (174)	150 (302)	63 (145)	150 (302)	-40 (-40)	-40 (-40)	-40 (-40)	-	-
E, G Switch output not used	-40 (-40)	83 (181)	83 (181)	83 (181)	150 (302)	68 (154)	150 (302)	-40 (-40)	-40 (-40)	-40 (-40)	-	-
E, G Switch output used	-40 (-40)	78 (172)	78 (172)	78 (172)	150 (302)	63 (145)	150 (302)	-40 (-40)	-40 (-40)	-40 (-40)	-	-
K, L	-40 (-40)	77 (171)	77 (171)	77 (171)	150 (302)	62 (144)	150 (302)	-40 (-40)	-40 (-40)	-40 (-40)	-	-

FMR51

Seal:
- **Viton GLT, –40 to 150 °C (–40 to 302 °F)**
- **Kalrez, –20 to 150 °C (–4 to 302 °F)**

GT19 housing (plastic PBT)
Temperature specifications: °C (°F)

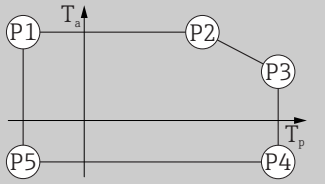

Power supply; output (item 2 in the product structure)	P1		P2		P3		P4		P5		P6	
	T_p	T_a	T_p	T_a	T_p	T_a	T_p	T_a	T_p	T_a	T_p	T_a
A	-40 (-40)	80 (176)	80 (176)	80 (176)	150 (302)	56 (133)	150 (302)	-40 (-40)	-40 (-40)	-40 (-40)	-	-
B Switch output not used	-40 (-40)	76 (169)	76 (169)	76 (169)	150 (302)	56 (133)	150 (302)	-40 (-40)	-40 (-40)	-40 (-40)	-	-
B Switch output used	-40 (-40)	60 (140)	60 (140)	60 (140)	150 (302)	38 (100)	150 (302)	-40 (-40)	-40 (-40)	-40 (-40)	-	-
C Channel 2 not used	-40 (-40)	82 (180)	82 (180)	82 (180)	150 (302)	56 (133)	150 (302)	-40 (-40)	-40 (-40)	-40 (-40)	-	-
C Channel 2 used	-40 (-40)	74 (165)	74 (165)	74 (165)	150 (302)	55 (131)	150 (302)	-40 (-40)	-40 (-40)	-40 (-40)	-	-
E, G Switch output not used	-40 (-40)	79 (174)	79 (174)	79 (174)	150 (302)	56 (133)	150 (302)	-40 (-40)	-40 (-40)	-40 (-40)	-	-
E, G Switch output used	-40 (-40)	63 (145)	63 (145)	63 (145)	150 (302)	41 (106)	150 (302)	-40 (-40)	-40 (-40)	-40 (-40)	-	-

FMR51

Seal:
- **Viton GLT, −40 to 150 °C (−40 to 302 °F)**
- **Kalrez, −20 to 150 °C (−4 to 302 °F)**

Housing GT20 (aluminum coated)
Temperature specifications: °C (°F)

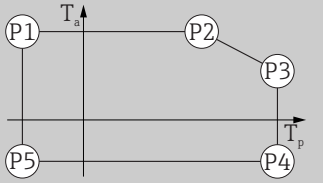

Power supply; output (item 2 in the product structure)	P1		P2		P3		P4		P5		P6	
	T_p	T_a	T_p	T_a	T_p	T_a	T_p	T_a	T_p	T_a	T_p	T_a
A	-40 (-40)	81 (178)	81 (178)	81 (178)	150 (302)	69 (156)	150 (302)	-40 (-40)	-40 (-40)	-40 (-40)	-	-
B Switch output not used	-40 (-40)	82 (180)	82 (180)	82 (180)	150 (302)	70 (158)	150 (302)	-40 (-40)	-40 (-40)	-40 (-40)	-	-
B Switch output used	-40 (-40)	77 (171)	77 (171)	77 (171)	150 (302)	64 (147)	150 (302)	-40 (-40)	-40 (-40)	-40 (-40)	-	-
C Channel 2 not used	-40 (-40)	82 (180)	82 (180)	82 (180)	150 (302)	70 (158)	150 (302)	-40 (-40)	-40 (-40)	-40 (-40)	-	-
C Channel 2 used	-40 (-40)	79 (174)	79 (174)	79 (174)	150 (302)	66 (151)	150 (302)	-40 (-40)	-40 (-40)	-40 (-40)	-	-
E, G Switch output not used	-40 (-40)	83 (181)	83 (181)	83 (181)	150 (302)	71 (160)	150 (302)	-40 (-40)	-40 (-40)	-40 (-40)	-	-
E, G Switch output used	-40 (-40)	78 (172)	78 (172)	78 (172)	150 (302)	65 (149)	150 (302)	-40 (-40)	-40 (-40)	-40 (-40)	-	-
K, L	-40 (-40)	77 (171)	77 (171)	77 (171)	150 (302)	65 (149)	150 (302)	-40 (-40)	-40 (-40)	-40 (-40)	-	-

FMR51
Seal: graphite, −40 to 250 °C (−40 to 482 °F)
Housing GT18 (316 L)
Temperature specifications: °C (°F)

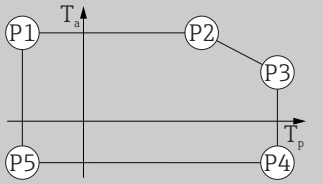

Power supply; output (item 2 in the product structure)	P1		P2		P3		P4		P5		P6	
	T_p	T_a	T_p	T_a	T_p	T_a	T_p	T_a	T_p	T_a	T_p	T_a
A	-40 (-40)	81 (178)	81 (178)	81 (178)	250 (482)	63 (145)	250 (482)	-40 (-40)	-40 (-40)	-40 (-40)	-	-
B Switch output not used	-40 (-40)	82 (180)	82 (180)	82 (180)	250 (482)	64 (147)	250 (482)	-40 (-40)	-40 (-40)	-40 (-40)	-	-
B Switch output used	-40 (-40)	77 (171)	77 (171)	77 (171)	250 (482)	58 (136)	250 (482)	-40 (-40)	-40 (-40)	-40 (-40)	-	-
C Channel 2 not used	-40 (-40)	82 (180)	82 (180)	82 (180)	250 (482)	64 (147)	250 (482)	-40 (-40)	-40 (-40)	-40 (-40)	-	-
C Channel 2 used	-40 (-40)	79 (174)	79 (174)	79 (174)	250 (482)	61 (142)	250 (482)	-40 (-40)	-40 (-40)	-40 (-40)	-	-
E, G Switch output not used	-40 (-40)	83 (181)	83 (181)	83 (181)	250 (482)	65 (149)	250 (482)	-40 (-40)	-40 (-40)	-40 (-40)	-	-
E, G Switch output used	-40 (-40)	78 (172)	78 (172)	78 (172)	250 (482)	60 (140)	250 (482)	-40 (-40)	-40 (-40)	-40 (-40)	-	-
K, L	-40 (-40)	77 (171)	77 (171)	77 (171)	250 (482)	59 (138)	250 (482)	-40 (-40)	-40 (-40)	-40 (-40)	-	-

FMR51
Seal: graphite, −40 to 250 °C (−40 to 482 °F)
GT19 housing (plastic PBT)
Temperature specifications: °C (°F)

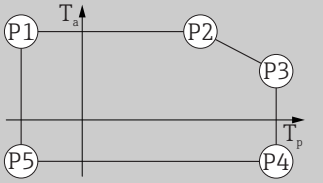

A0019351

Power supply; output (item 2 in the product structure)	P1		P2		P3		P4		P5		P6	
	T_p	T_a	T_p	T_a	T_p	T_a	T_p	T_a	T_p	T_a	T_p	T_a
A	-40 (-40)	80 (176)	80 (176)	80 (176)	250 (482)	44 (111)	250 (482)	-40 (-40)	-40 (-40)	-40 (-40)	-	-
B Switch output not used	-40 (-40)	76 (169)	76 (169)	76 (169)	250 (482)	44 (111)	250 (482)	-40 (-40)	-40 (-40)	-40 (-40)	-	-
B Switch output used	-40 (-40)	60 (140)	60 (140)	60 (140)	250 (482)	32 (90)	250 (482)	-40 (-40)	-40 (-40)	-40 (-40)	-	-
C Channel 2 not used	-40 (-40)	82 (180)	82 (180)	82 (180)	250 (482)	44 (111)	250 (482)	-40 (-40)	-40 (-40)	-40 (-40)	-	-
C Channel 2 used	-40 (-40)	74 (165)	74 (165)	74 (165)	250 (482)	44 (111)	250 (482)	-40 (-40)	-40 (-40)	-40 (-40)	-	-
E, G Switch output not used	-40 (-40)	79 (174)	79 (174)	79 (174)	250 (482)	44 (111)	250 (482)	-40 (-40)	-40 (-40)	-40 (-40)	-	-
E, G Switch output used	-40 (-40)	63 (145)	63 (145)	63 (145)	250 (482)	35 (95)	250 (482)	-40 (-40)	-40 (-40)	-40 (-40)	-	-

FMR51
Seal: graphite, −40 to 250 °C (−40 to 482 °F)
Housing GT20 (aluminum coated)
Temperature specifications: °C (°F)

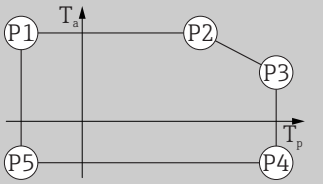

A0019351

Power supply; output (item 2 in the product structure)	P1		P2		P3		P4		P5		P6	
	T_p	T_a	T_p	T_a	T_p	T_a	T_p	T_a	T_p	T_a	T_p	T_a
A	-40 (-40)	81 (178)	81 (178)	81 (178)	250 (482)	67 (153)	250 (482)	-40 (-40)	-40 (-40)	-40 (-40)	-	-
B Switch output not used	-40 (-40)	82 (180)	82 (180)	82 (180)	250 (482)	68 (154)	250 (482)	-40 (-40)	-40 (-40)	-40 (-40)	-	-
B Switch output used	-40 (-40)	77 (171)	77 (171)	77 (171)	250 (482)	62 (144)	250 (482)	-40 (-40)	-40 (-40)	-40 (-40)	-	-
C Channel 2 not used	-40 (-40)	82 (180)	82 (180)	82 (180)	250 (482)	68 (154)	250 (482)	-40 (-40)	-40 (-40)	-40 (-40)	-	-
C Channel 2 used	-40 (-40)	79 (174)	79 (174)	79 (174)	250 (482)	64 (147)	250 (482)	-40 (-40)	-40 (-40)	-40 (-40)	-	-
E, G Switch output not used	-40 (-40)	83 (181)	83 (181)	83 (181)	250 (482)	69 (156)	250 (482)	-40 (-40)	-40 (-40)	-40 (-40)	-	-
E, G Switch output used	-40 (-40)	78 (172)	78 (172)	78 (172)	250 (482)	64 (147)	250 (482)	-40 (-40)	-40 (-40)	-40 (-40)	-	-
K, L	-40 (-40)	77 (171)	77 (171)	77 (171)	250 (482)	63 (154)	250 (482)	-40 (-40)	-40 (-40)	-40 (-40)	-	-

FMR51
Seal: graphite, −196 to 450 °C (−321 to 842 °F)
Housing GT18 (316 L)
Temperature specifications: °C (°F)

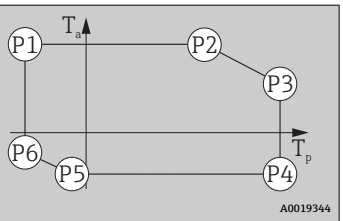

Power supply; output (item 2 in the product structure)	P1		P2		P3		P4		P5		P6	
	T_p	T_a	T_p	T_a	T_p	T_a	T_p	T_a	T_p	T_a	T_p	T_a
A	-196 (-321)	81 (178)	81 (178)	81 (178)	450 (842)	26 (79)	450 (842)	-40 (-40) [1]	-40 (-40) [1]	-40 (-40) [1]	-196 (-321)	-15 (+5)
B Switch output not used	-196 (-321)	82 (180)	82 (180)	82 (180)	450 (842)	26 (79)	450 (842)	-40 (-40) [1]	-40 (-40) [1]	-40 (-40) [1]	-196 (-321)	-15 (+5)
B Switch output used	-196 (-321)	77 (171)	77 (171)	77 (171)	450 (842)	25 (77)	450 (842)	-40 (-40) [1]	-40 (-40) [1]	-40 (-40) [1]	-196 (-321)	-15 (+5)
C Channel 2 not used	-196 (-321)	82 (180)	82 (180)	82 (180)	450 (842)	26 (79)	450 (842)	-40 (-40) [1]	-40 (-40) [1]	-40 (-40) [1]	-196 (-321)	-15 (+5)
C Channel 2 used	-196 (-321)	79 (174)	79 (174)	79 (174)	450 (842)	26 (79)	450 (842)	-40 (-40) [1]	-40 (-40) [1]	-40 (-40) [1]	-196 (-321)	-15 (+5)
E, G Switch output not used	-196 (-321)	83 (181)	83 (181)	83 (181)	450 (842)	26 (79)	450 (842)	-40 (-40) [1]	-40 (-40) [1]	-40 (-40) [1]	-196 (-321)	-15 (+5)
E, G Switch output used	-196 (-321)	78 (172)	78 (172)	78 (172)	450 (842)	26 (79)	450 (842)	-40 (-40) [1]	-40 (-40) [1]	-40 (-40) [1]	-196 (-321)	-15 (+5)
K, L	-196 (-321)	77 (171)	77 (171)	77 (171)	450 (842)	26 (79)	450 (842)	-40 (-40) [1]	-40 (-40) [1]	-40 (-40) [1]	-196 (-321)	-15 (+5)

1) -50 °C (-58 °F) for order code 580 ("Test, certificate") = JN ("Transmitter ambient temperature -50°C/-58°F")

FMR51
Seal: graphite, −196 to 450 °C (−321 to 842 °F)
GT19 housing (plastic PBT)
Temperature specifications: °C (°F)

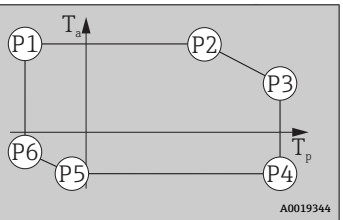

Power supply; output (item 2 in the product structure)	P1		P2		P3		P4		P5		P6	
	T_p	T_a	T_p	T_a	T_p	T_a	T_p	T_a	T_p	T_a	T_p	T_a
A	-196 (-321)	80 (176)	80 (176)	80 (176)	450 (842)	-29 (-20)	450 (842)	-40 (-40)	-40 (-40)	-40 (-40)	-196 (-321)	9 (48)
B Switch output not used	-196 (-321)	76 (169)	76 (169)	76 (169)	450 (842)	-29 (-20)	450 (842)	-40 (-40)	-40 (-40)	-40 (-40)	-196 (-321)	9 (48)
B Switch output used	-196 (-321)	60 (140)	60 (140)	60 (140)	450 (842)	-29 (-20)	450 (842)	-40 (-40)	-40 (-40)	-40 (-40)	-196 (-321)	9 (48)
C Channel 2 not used	-196 (-321)	82 (180)	82 (180)	82 (180)	450 (842)	-29 (-20)	450 (842)	-40 (-40)	-40 (-40)	-40 (-40)	-196 (-321)	9 (48)
C Channel 2 used	-196 (-321)	74 (165)	74 (165)	74 (165)	450 (842)	-29 (-20)	450 (842)	-40 (-40)	-40 (-40)	-40 (-40)	-196 (-321)	9 (48)
E, G Switch output not used	-196 (-321)	79 (174)	79 (174)	79 (174)	450 (842)	-29 (-20)	450 (842)	-40 (-40)	-40 (-40)	-40 (-40)	-196 (-321)	9 (48)
E, G Switch output used	-196 (-321)	63 (145)	63 (145)	63 (145)	450 (842)	-29 (-20)	450 (842)	-40 (-40)	-40 (-40)	-40 (-40)	-196 (-321)	9 (48)

FMR51
Seal: graphite, −196 to 450 °C (−321 to 842 °F)
Housing GT20 (aluminum coated)
Temperature specifications: °C (°F)

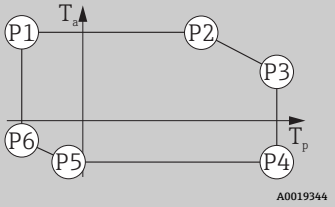

Power supply; output (item 2 in the product structure)	P1		P2		P3		P4		P5		P6	
	T_p	T_a	T_p	T_a	T_p	T_a	T_p	T_a	T_p	T_a	T_p	T_a
A	-196 (-321)	81 (178)	81 (178)	81 (178)	450 (842)	39 (102)	450 (842)	-40 (-40) [1]	-40 (-40) [1]	-40 (-40) [1]	-196 (-321)	-20 (-4) [2]
B Switch output not used	-196 (-321)	82 (180)	82 (180)	82 (180)	450 (842)	39 (102)	450 (842)	-40 (-40) [1]	-40 (-40) [1]	-40 (-40) [1]	-196 (-321)	-20 (-4) [2]
B Switch output used	-196 (-321)	77 (171)	77 (171)	77 (171)	450 (842)	36 (97)	450 (842)	-40 (-40) [1]	-40 (-40) [1]	-40 (-40) [1]	-196 (-321)	-20 (-4) [2]
C Channel 2 not used	-196 (-321)	82 (180)	82 (180)	82 (180)	450 (842)	39 (102)	450 (842)	-40 (-40) [1]	-40 (-40) [1]	-40 (-40) [1]	-196 (-321)	-20 (-4) [2]
C Channel 2 used	-196 (-321)	79 (174)	79 (174)	79 (174)	450 (842)	38 (100)	450 (842)	-40 (-40) [1]	-40 (-40) [1]	-40 (-40) [1]	-196 (-321)	-20 (-4) [2]
E, G Switch output not used	-196 (-321)	83 (181)	83 (181)	83 (181)	450 (842)	39 (102)	450 (842)	-40 (-40) [1]	-40 (-40) [1]	-40 (-40) [1]	-196 (-321)	-20 (-4) [2]
E, G Switch output used	-196 (-321)	78 (172)	78 (172)	78 (172)	450 (842)	38 (100)	450 (842)	-40 (-40) [1]	-40 (-40) [1]	-40 (-40) [1]	-196 (-321)	-20 (-4) [2]
K, L	-196 (-321)	77 (171	77 (171)	77 (171)	450 (842)	37 (99)	450 (842)	-40 (-40) [1]	-40 (-40) [1]	-40 (-40) [1]	-196 (-321)	-20 (-4) [2]

1) -50 °C (-58 °F) for order code 580 ("Test, certificate") = JN ("Transmitter ambient temperature -50°C/-58°F")
2) -28 °C (-18 °F) for order code 580 ("Test, certificate") = JN ("Transmitter ambient temperature -50°C/-58°F")

FMR52
Antenna: horn 50mm/2"
Housing GT18 (316 L)
Temperature specifications: °C (°F)

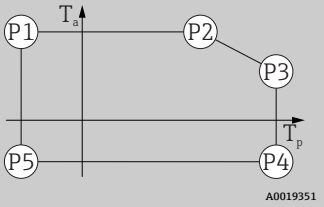

Power supply; output (item 2 in the product structure)	P1		P2		P3		P4		P5		P6	
	T_p	T_a	T_p	T_a	T_p	T_a	T_p	T_a	T_p	T_a	T_p	T_a
A	-196 (-321)	81 (178)	81 (178)	81 (178)	200 (392)	61 (142)	200 (392)	-40 (-40) [1]	-40 (-40) [1]	-40 (-40) [1]	-196 (-321)	-3 (+27)
B Switch output not used	-196 (-321)	82 (180)	82 (180)	82 (180)	200 (392)	61 (142)	200 (392)	-40 (-40) [1]	-40 (-40) [1]	-40 (-40) [1]	-196 (-321)	-3 (+27)
B Switch output used	-196 (-321)	77 (171)	77 (171)	77 (171)	200 (392)	55 (131)	200 (392)	-40 (-40) [1]	-40 (-40) [1]	-40 (-40) [1]	-196 (-321)	-3 (+27)
C Channel 2 not used	-196 (-321)	82 (180)	82 (180)	82 (180)	200 (392)	62 (144)	200 (392)	-40 (-40) [1]	-40 (-40) [1]	-40 (-40) [1]	-196 (-321)	-3 (+27)
C Channel 2 used	-196 (-321)	79 (174)	79 (174)	79 (174)	200 (392)	58 (136)	200 (392)	-40 (-40) [1]	-40 (-40) [1]	-40 (-40) [1]	-196 (-321)	-3 (+27)
E, G Switch output not used	-196 (-321)	83 (181)	83 (181)	83 (181)	200 (392)	62 (144)	200 (392)	-40 (-40) [1]	-40 (-40) [1]	-40 (-40) [1]	-196 (-321)	-3 (+27)

FMR52
Antenna: horn 50mm/2"
Housing GT18 (316 L)
Temperature specifications: °C (°F)

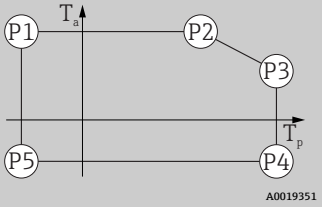

Power supply; output (item 2 in the product structure)	P1		P2		P3		P4		P5		P6	
	T_p	T_a	T_p	T_a	T_p	T_a	T_p	T_a	T_p	T_a	T_p	T_a
E, G Switch output used	-196 (-321)	78 (172)	78 (172)	78 (172)	200 (392)	57 (135)	200 (392)	-40 (-40) [1)]	-40 (-40) [1)]	-40 (-40) [1)]	-196 (-321)	-3 (+27)
K, L	-196 (-321)	77 (171)	77 (171)	77 (171)	200 (392)	56 (133)	200 (392)	-40 (-40) [1)]	-40 (-40) [1)]	-40 (-40) [1)]	-196 (-321)	-3 (+27)

1) -50 °C (-58 °F) for order code 580 ("Test, certificate") = JN ("Transmitter ambient temperature -50°C/-58°F")

FMR52
Antenna: horn 50mm/2"
GT19 housing (plastic PBT)
Temperature specifications: °C (°F)

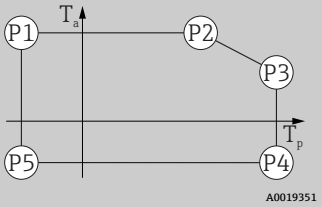

Power supply; output (item 2 in the product structure)	P1		P2		P3		P4		P5		P6	
	T_p	T_a	T_p	T_a	T_p	T_a	T_p	T_a	T_p	T_a	T_p	T_a
A	-40 (-40)	80 (176)	80 (176)	80 (176)	200 (392)	42 (108)	200 (392)	-40 (-40)	-40 (-40)	-40 (-40)	-	-
B Switch output not used	-40 (-40)	76 (169)	76 (169)	76 (169)	200 (392)	42 (108)	200 (392)	-40 (-40)	-40 (-40)	-40 (-40)	-	-
B Switch output used	-40 (-40)	60 (140)	60 (140)	60 (140)	200 (392)	31 (88)	200 (392)	-40 (-40)	-40 (-40)	-40 (-40)	-	-
C Channel 2 not used	-40 (-40)	82 (180)	82 (180)	82 (180)	200 (392)	42 (108)	200 (392)	-40 (-40)	-40 (-40)	-40 (-40)	-	-
C Channel 2 used	-40 (-40)	74 (165)	74 (165)	74 (165)	200 (392)	42 (108)	200 (392)	-40 (-40)	-40 (-40)	-40 (-40)	-	-
E, G Switch output not used	-40 (-40)	79 (174)	79 (174)	79 (174)	200 (392)	42 (108)	200 (392)	-40 (-40)	-40 (-40)	-40 (-40)	-	-
E, G Switch output used	-40 (-40)	63 (145)	63 (145)	63 (145)	200 (392)	33 (91)	200 (392)	-40 (-40)	-40 (-40)	-40 (-40)	-	-

FMR52
Antenna: horn 50mm/2"
Housing GT20 (aluminum coated)
Temperature specifications: °C (°F)

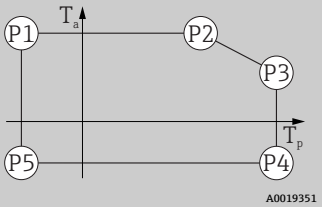

Power supply; output (item 2 in the product structure)	P1		P2		P3		P4		P5		P6	
	T_p	T_a	T_p	T_a	T_p	T_a	T_p	T_a	T_p	T_a	T_p	T_a
A	-196 (-321)	81 (178)	81 (178)	81 (178)	200 (392)	65 (149)	200 (392)	-40 (-40) [1)]	-40 (-40) [1)]	-40 (-40) [1)]	-196 (-321)	-14 (+7)
B Switch output not used	-196 (-321)	82 (180)	82 (180)	82 (180)	200 (392)	65 (149	200 (392)	-40 (-40) [1)]	-40 (-40) [1)]	-40 (-40) [1)]	-196 (-321)	-14 (+7)

FMR52
Antenna: horn 50mm/2"
Housing GT20 (aluminum coated)
Temperature specifications: °C (°F)

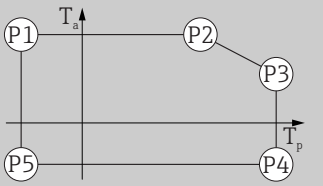

Power supply; output (item 2 in the product structure)	P1		P2		P3		P4		P5		P6	
	T_p	T_a	T_p	T_a	T_p	T_a	T_p	T_a	T_p	T_a	T_p	T_a
B Switch output used	-196 (-321)	77 (171)	77 (171)	77 (171)	200 (392)	59 (138)	200 (392)	-40 (-40) [1]	-40 (-40) [1]	-40 (-40) [1]	-196 (-321)	-14 (+7)
C Channel 2 not used	-196 (-321)	82 (180)	82 (180)	82 (180)	200 (392)	66 (151)	200 (392)	-40 (-40) [1]	-40 (-40) [1]	-40 (-40) [1]	-196 (-321)	-14 (+7)
C Channel 2 used	-196 (-321)	79 (174)	79 (174)	79 (174)	200 (392)	62 (144)	200 (392)	-40 (-40) [1]	-40 (-40) [1]	-40 (-40) [1]	-196 (-321)	-14 (+7)
E, G Switch output not used	-196 (-321)	83 (181)	83 (181)	83 (181)	200 (392)	66 (1512)	200 (392)	-40 (-40) [1]	-40 (-40) [1]	-40 (-40) [1]	-196 (-321)	-14 (+7)
E, G Switch output used	-196 (-321)	78 (172)	78 (172)	78 (172)	200 (392)	61 (142)	200 (392)	-40 (-40) [1]	-40 (-40) [1]	-40 (-40) [1]	-196 (-321)	-14 (+7)
K, L	-196 (-321)	77 (171)	77 (171)	77 (171)	200 (392)	60 (140)	200 (392)	-40 (-40) [1]	-40 (-40) [1]	-40 (-40) [1]	-196 (-321)	-14 (+7)

1) -50 °C (-58 °F) for order code 580 ("Test, certificate") = JN ("Transmitter ambient temperature -50°C/-58°F")

FMR52
Antenna: horn 80mm/3"
Housing GT18 (316 L)
Temperature specifications: °C (°F)

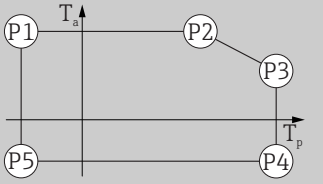

Power supply; output (item 2 in the product structure)	P1		P2		P3		P4		P5		P6	
	T_p	T_a	T_p	T_a	T_p	T_a	T_p	T_a	T_p	T_a	T_p	T_a
A	-196 (-321)	81 (178)	81 (178)	81 (178)	200 (392)	57 (135)	200 (392)	-40 (-40) [1]	-40 (-40) [1]	-40 (-40) [1]	-196 (-321)	10 (50)
B Switch output not used	-196 (-321)	82 (180)	82 (180)	82 (180)	200 (392)	57 (135)	200 (392)	-40 (-40) [1]	-40 (-40) [1]	-40 (-40) [1]	-196 (-321)	10 (50)
B Switch output used	-196 (-321)	77 (171)	77 (171)	77 (171)	200 (392)	51 (124)	200 (392)	-40 (-40) [1]	-40 (-40) [1]	-40 (-40) [1]	-196 (-321)	10 (50)
C Channel 2 not used	-196 (-321)	82 (180)	82 (180)	82 (180)	200 (392)	57 (135)	200 (392)	-40 (-40) [1]	-40 (-40) [1]	-40 (-40) [1]	-196 (-321)	10 (50)
C Channel 2 used	-196 (-321)	79 (174)	79 (174)	79 (174)	200 (392)	54 (129)	200 (392)	-40 (-40) [1]	-40 (-40) [1]	-40 (-40) [1]	-196 (-321)	10 (50)
E, G Switch output not used	-196 (-321)	83 (181)	83 (181)	83 (181)	200 (392)	57 (135)	200 (392)	-40 (-40) [1]	-40 (-40) [1]	-40 (-40) [1]	-196 (-321)	10 (50)
E, G Switch output used	-196 (-321)	78 (172)	78 (172)	78 (172)	200 (392)	53 (127)	200 (392)	-40 (-40) [1]	-40 (-40) [1]	-40 (-40) [1]	-196 (-321)	10 (50)
K, L	-196 (-321)	77 (171)	77 (171)	77 (171)	200 (392)	52 (126)	200 (392)	-40 (-40) [1]	-40 (-40) [1]	-40 (-40) [1]	-196 (-321)	10 (50)

1) -50 °C (-58 °F) for order code 580 ("Test, certificate") = JN ("Transmitter ambient temperature -50°C/-58°F")

FMR52
Antenna: horn 80mm/3"
GT19 housing (plastic PBT)
Temperature specifications: °C (°F)

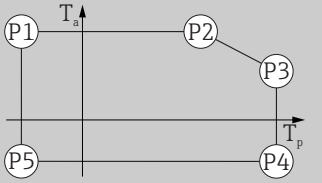

Power supply; output (item 2 in the product structure)	P1		P2		P3		P4		P5		P6	
	T_p	T_a	T_p	T_a	T_p	T_a	T_p	T_a	T_p	T_a	T_p	T_a
A	-40 (-40)	80 (176)	80 (176)	80 (176)	200 (392)	36 (97)	200 (392)	-40 (-40)	-40 (-40)	-40 (-40)	-	-
B Switch output not used	-40 (-40)	76 (169)	76 (169)	76 (169)	200 (392)	36 (97)	200 (392)	-40 (-40)	-40 (-40)	-40 (-40)	-	-
B Switch output used	-40 (-40)	60 (140)	60 (140)	60 (140)	200 (392)	27 (81)	200 (392)	-40 (-40)	-40 (-40)	-40 (-40)	-	-
C Channel 2 not used	-40 (-40)	82 (180)	82 (180)	82 (180)	200 (392)	36 (97)	200 (392)	-40 (-40)	-40 (-40)	-40 (-40)	-	-
C Channel 2 used	-40 (-40)	74 (165)	74 (165)	74 (165)	200 (392)	36 (97)	200 (392)	-40 (-40)	-40 (-40)	-40 (-40)	-	-
E, G Switch output not used	-40 (-40)	79 (174)	79 (174)	79 (174)	200 (392)	36 (97)	200 (392)	-40 (-40)	-40 (-40)	-40 (-40)	-	-
E, G Switch output used	-40 (-40)	63 (145)	63 (145)	63 (145)	200 (392)	30 (86)	200 (392)	-40 (-40)	-40 (-40)	-40 (-40)	-	-

FMR52
Antenna: horn 80mm/3"
Housing GT20 (aluminum coated)
Temperature specifications: °C (°F)

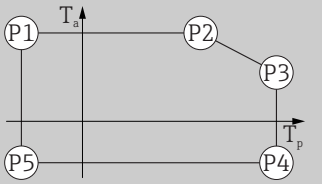

Power supply; output (item 2 in the product structure)	P1		P2		P3		P4		P5		P6	
	T_p	T_a	T_p	T_a	T_p	T_a	T_p	T_a	T_p	T_a	T_p	T_a
A	-196 (-321)	81 (178)	81 (178)	81 (178)	200 (392)	61 (142)	200 (392)	-40 (-40) [1]	-40 (-40) [1]	-40 (-40) [1]	-196 (-321)	-8 (+18)
B Switch output not used	-196 (-321)	82 (180)	82 (180)	82 (180)	200 (392)	62 (144)	200 (392)	-40 (-40) [1]	-40 (-40) [1]	-40 (-40) [1]	-196 (-321)	-8 (+18)
B Switch output used	-196 (-321)	77 (171)	77 (171)	77 (171)	200 (392)	56 (133)	200 (392)	-40 (-40) [1]	-40 (-40) [1]	-40 (-40) [1]	-196 (-321)	-8 (+18)
C Channel 2 not used	-196 (-321)	82 (180)	82 (180)	82 (180)	200 (392)	62 (144)	200 (392)	-40 (-40) [1]	-40 (-40) [1]	-40 (-40) [1]	-196 (-321)	-8 (+18)
C Channel 2 used	-196 (-321)	79 (174)	79 (174)	79 (174)	200 (392)	58 (136)	200 (392)	-40 (-40) [1]	-40 (-40) [1]	-40 (-40) [1]	-196 (-321)	-8 (+18)
E, G Switch output not used	-196 (-321)	83 (181)	83 (181)	83 (181)	200 (392)	62 (144)	200 (392)	-40 (-40) [1]	-40 (-40) [1]	-40 (-40) [1]	-196 (-321)	-8 (+18)
E, G Switch output used	-196 (-321)	78 (172)	78 (172)	78 (172)	200 (392)	58 (136)	200 (392)	-40 (-40) [1]	-40 (-40) [1]	-40 (-40) [1]	-196 (-321)	-8 (+18)
K, L	-196 (-321)	77 (171)	77 (171)	77 (171)	200 (392)	57 (135)	200 (392)	-40 (-40) [1]	-40 (-40) [1]	-40 (-40) [1]	-196 (-321)	-8 (+18)

1) -50 °C (-58 °F) for order code 580 ("Test, certificate") = JN ("Transmitter ambient temperature -50°C/-58°F")

Storage temperature

−40 to +80 °C (−40 to +176 °F)

−50 °C (−58 °F) with manufacturer declaration on request

Climate class	DIN EN 60068-2-38 (test Z/AD)

Altitude according to IEC61010-1 Ed.3	▪ Generally up to 2 000 m (6 600 ft) above MSL.
	▪ Above 2 000 m (6 600 ft) if the following conditions are met:
	  ▪ Ordering feature 020 "Power supply; Output" = A, B, C, E or G (2-wire versions)
	  ▪ Supply voltage U < 35 V
	  ▪ Supply voltage of overvoltage category 1

Degree of protection	▪ When housing is closed, tested according to:
	  ▪ IP68, NEMA6P (24 h at 1.83 m under water)
	  ▪ For plastic housing with see-through lid (display): IP68 (24 h at 1.00 m under water)
	  This restriction applies if the following options have been selected simultaneously in the product structure: 030 ("Display/operation") = C ("SD02") or E ("SD03"); 040 ("Housing") = A ("GT19").
	  ▪ IP66, NEMA4X
	▪ With housing open: IP20, NEMA1
	▪ Display module: IP22, NEMA2
	Degree of protection IP68 NEMA6P only applies for M12 PROFIBUS PA plugs if the PROFIBUS cable is plugged in and is also rated IP68 NEMA6P.

Vibration resistance	DIN EN 60068-2-64 / IEC 60068-2-64: 20 to 2 000 Hz, 1 $(m/s^2)^2/Hz$
Cleaning the antenna	The antenna may become contaminated depending on the application. Emission and reception of microwaves can thus be hindered. The level of contamination leading to this error depends on the medium and on the reflectivity, which is mainly determined by the dielectric constant ε_r. If the medium tends to cause contamination and buildup, cleaning on a regular basis is recommended. Care must be taken to ensure the antenna is not damaged in the process of mechanical or hose-down cleaning. Material compatibility must be taken into account if cleaning agents are used! The maximum permissible flange temperatures should not be exceeded.
Electromagnetic compatibility (EMC)	Electromagnetic compatibility in accordance with all of the relevant requirements outlined in the EN 61326 series and NAMUR Recommendation EMC (NE 21). For details, refer to the Declaration of Conformity. Download at www.endress.com A normal device cable suffices if only the analog signal should be used. Use a shielded cable for digital communication (HART/ PA/ FF). Always use a shielded cable for the electronic version "2-wire, 4-20 mA HART + 4-20 mA analog". Maximum measured error during EMC testing: < 0.5 % of the span. By way of derogation, for devices with a plastic housing and see-through lid (integrated display SD02 or SD03) the measured error can be up to 2 % of the span in the event of strong electromagnetic radiation in the 1 to 2 GHz frequency range.

Process

Process temperature, process pressure

The pressure ranges indicated can be reduced by the choice of process connection. The nominal pressure (PN) indicated on the nameplate refers to a reference temperature of 20 °C, and of 100 °F for ASME flanges. Observe pressure-temperature dependency.

Please refer to the following standards for the pressure values permitted at higher temperatures:

- EN 1092-1: 2001 Tab. 18
  With regard to their stability-temperature property, the materials 1.4435 and 1.4404 are grouped together under 13EO in EN 1092-1 Tab. 18. The chemical composition of the two materials can be identical.
- ASME B 16.5a – 1998 Tab. 2-2.2 F316
- ASME B 16.5a – 1998 Tab. 2.3.8 N10276
- JIS B 2220

FMR51

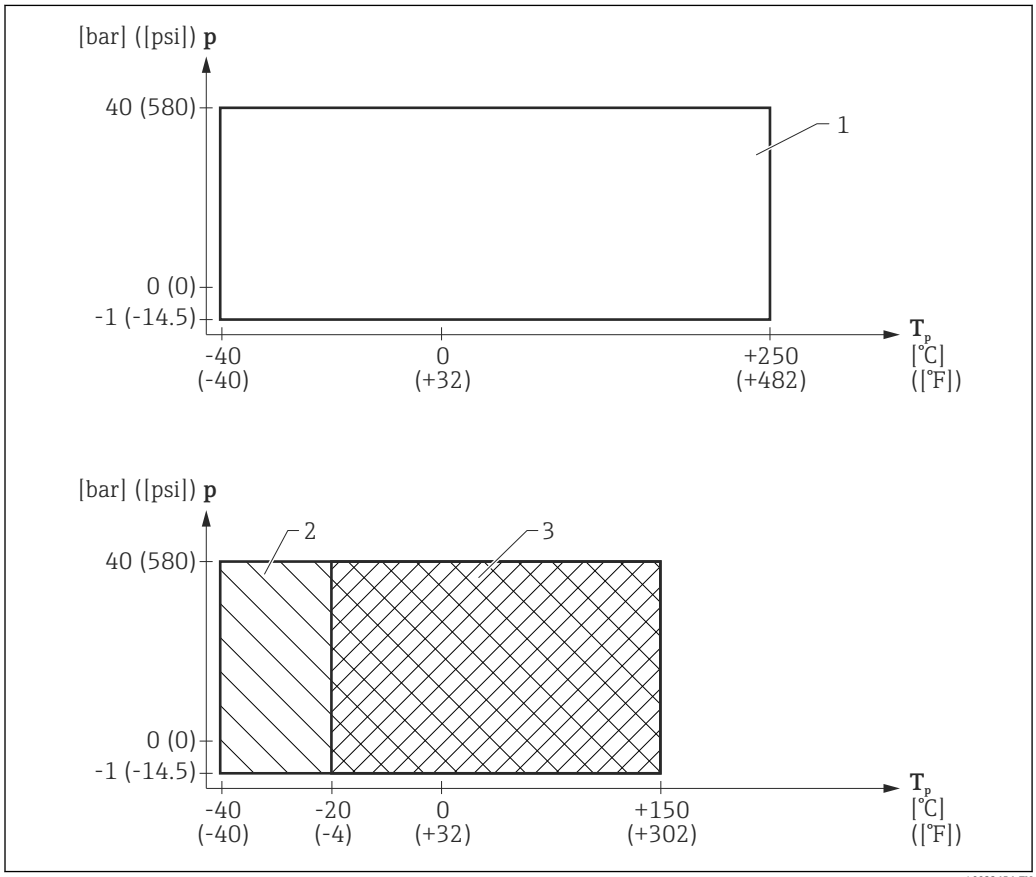

25 FMR51: Permitted range for process temperature and process pressure

1 Seal: graphite (feature 090 "Seal", version D3)
2 Seal: Viton (feature 090 "Seal", version A5)
3 Seal: Kalrez (feature 090 "Seal", version C1)

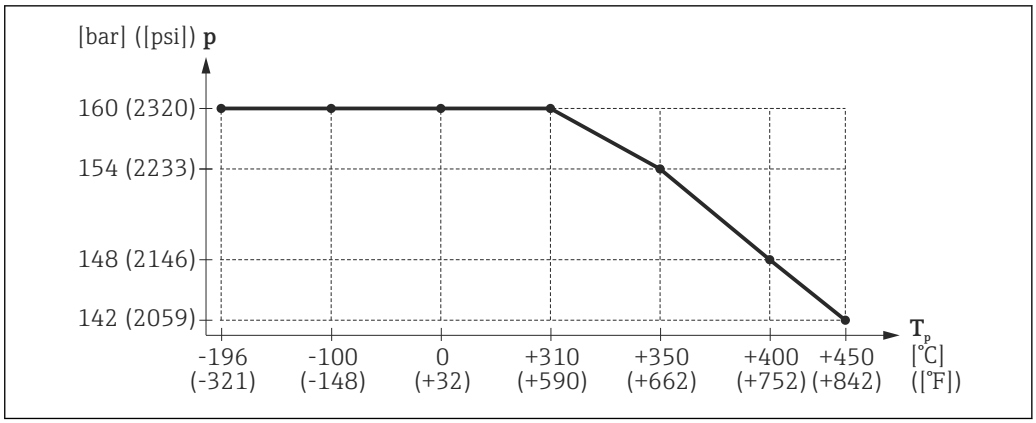

26 *FMR51: Permitted range for process temperature and process pressure of the HT version (feature 090 "Seal", version D2)*

Feature 090 "Seal"	Process temperature range	Process pressure range
A5: Viton GLT	−40 to +150 °C (−40 to 302 °F)	p_{rel} = −1 to 40 bar (−14.5 to 580 psi)
C1: Kalrez	−20 to +150 °C (−4 to 302 °F)	
D3: graphite -40 to 250°C/-40 to 482°F	−40 to +250 °C (−40 to 482 °F)	
D2: graphite -196 to 450°C/-321 to 842°F (HT)	−196 to +450 °C (−321 to 842 °F)	p_{rel} = −1 to 160 bar (−14.5 to 2 320 psi) See the diagram above for temperature-dependent restrictions [1].

1) The pressure range may be reduced further if the device has a CRN approval → 94

FMR52

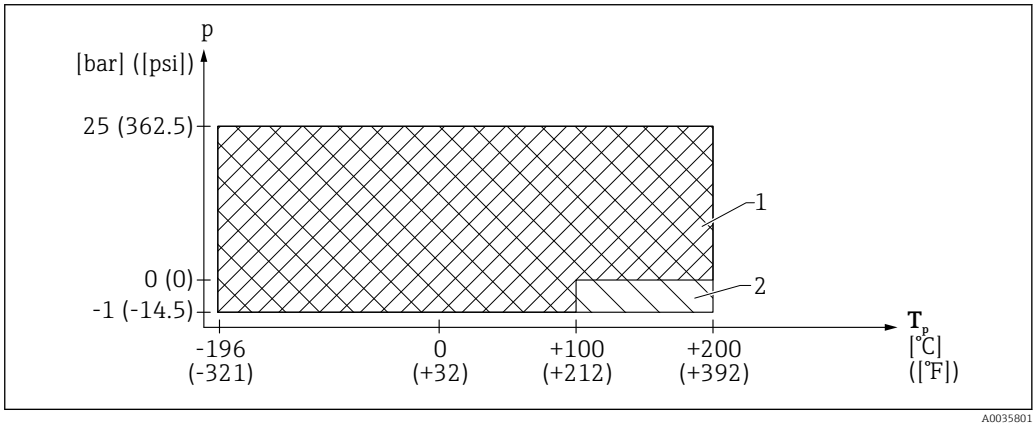

27 *FMR52: Permitted range for process temperature and process pressure*

1 Valid for process connections: 6" (ANSI), DN150 (EN), 10K150A (JIS)
2 Valid for all other process connections

Feature 100 "Process connection"	Process temperature range	Process pressure range
▪ AFK: 2" 150lbs (ASME) ▪ AGK: 3" 150lbs (ASME) ▪ AHK: 4" 150lbs (ASME) ▪ ATK: 4" 300lbs (ASME) ▪ CFK: DN50 PN10/16 (EN) ▪ CGK: DN80 PN10/16 (EN) ▪ CHK: DN100 PN10/16 (EN) ▪ KFK: 10K 50A (JIS) ▪ KGK: 10K 80A (JIS) ▪ KHK: 10K 100A (JIS) ▪ MRK: DIN11851 DN50 ▪ MTK: DIN11851 DN80 ▪ TDK: Tri-Clamp 2" ▪ TFK: Tri-Clamp 3" ▪ THK: Tri-Clamp 4"	−196 to +200 °C (−321 to 392 °F)	p_{rel} = −1 to 25 bar (−14.5 to 363 psi) [1) 2)]
▪ AJK: 6" 150lbs (ANSI) ▪ CJK: DN150 PN10/16 (EN) ▪ KJK: 10K 150A (JIS)		▪ For T = −196 to +100 °C (−321 to 212 °F): p_{rel} = −1 to 25 bar (−14.5 to 363 psi) [1) 2)] ▪ For T = 100 to 200 °C (212 to 392 °F): p_{rel} = 0 to 25 bar (0 to 363 psi) [1) 2)]

1) The pressure range may be further restricted for devices with a CRN approval → 🖹 94
2) Process connections up to 25 bar (363 psi) available on request

Mechanical construction

Dimensions

Dimensions of the electronics housing

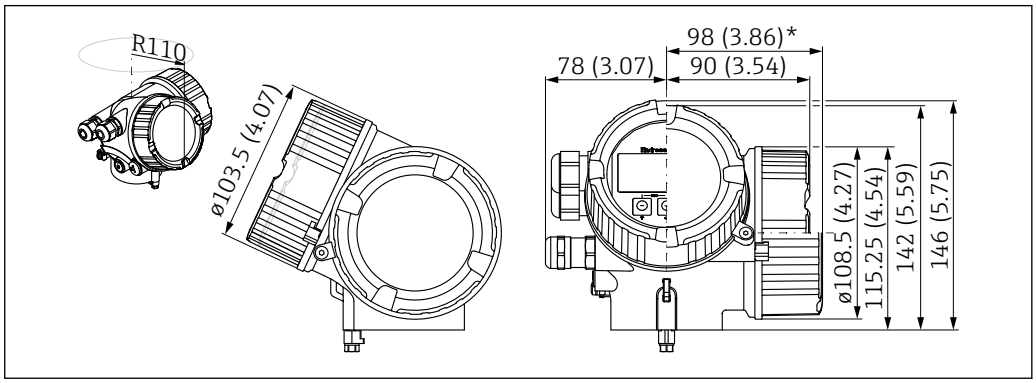

28 *Housing GT18 (316L). Unit of measurement mm (in)*

**For devices with integrated overvoltage protection.*

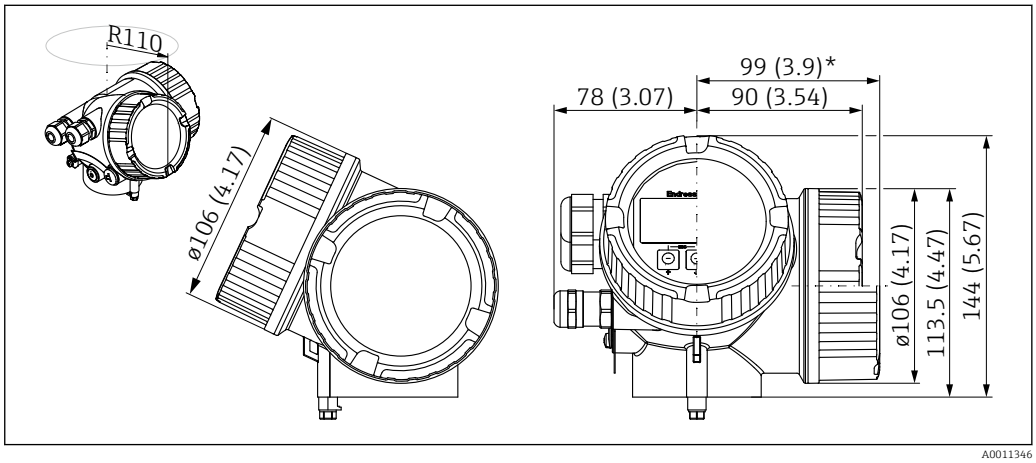

29 *GT19 housing (plastic PBT). Unit of measurement mm (in)*

**For devices with integrated overvoltage protection.*

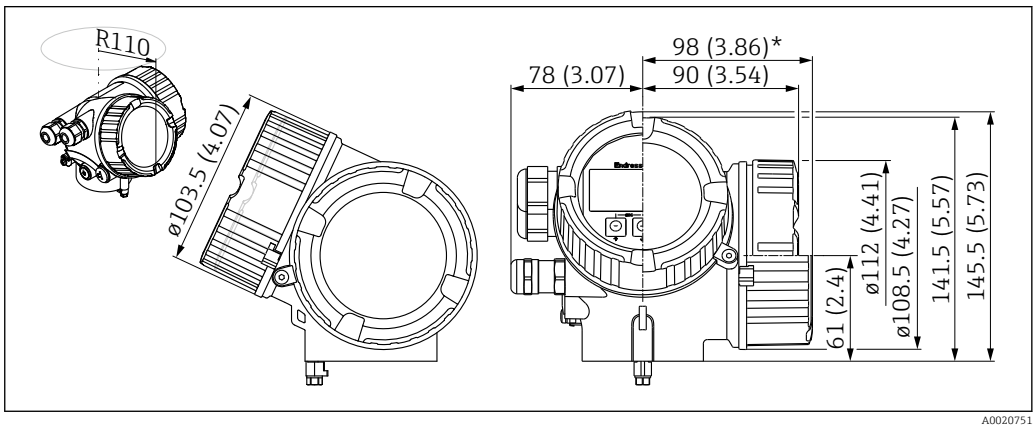

30 *Housing GT20 (aluminum coated). Unit of measurement mm (in)*

**For devices with integrated overvoltage protection.*

FMR51 version T ≤ 150 °C (302 °F) without antenna extension

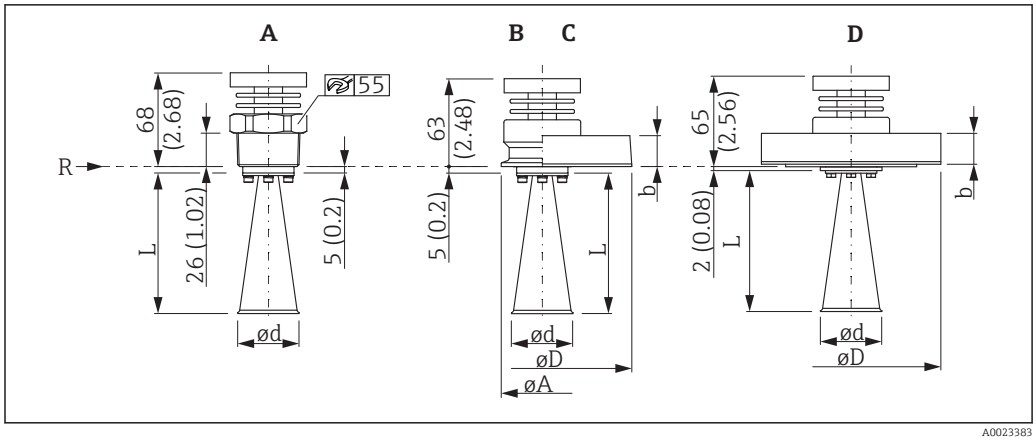

31 Dimensions of antenna, version without antenna extension. Unit of measurement mm (in)

A Process connection: thread
B Process connection: Tri-Clamp ISO2852
C Process connection: flange 316L
D Process connection: flange AlloyC>316L
R Reference point of measurement

Valid for devices with seal
- Viton GLT
- Kalrez

Dimensions of the horn antenna (L, Ød) and the process connections (ØD, b) are listed in the following tables.

FMR51 version T ≤ 150 °C (302 °F) with antenna extension

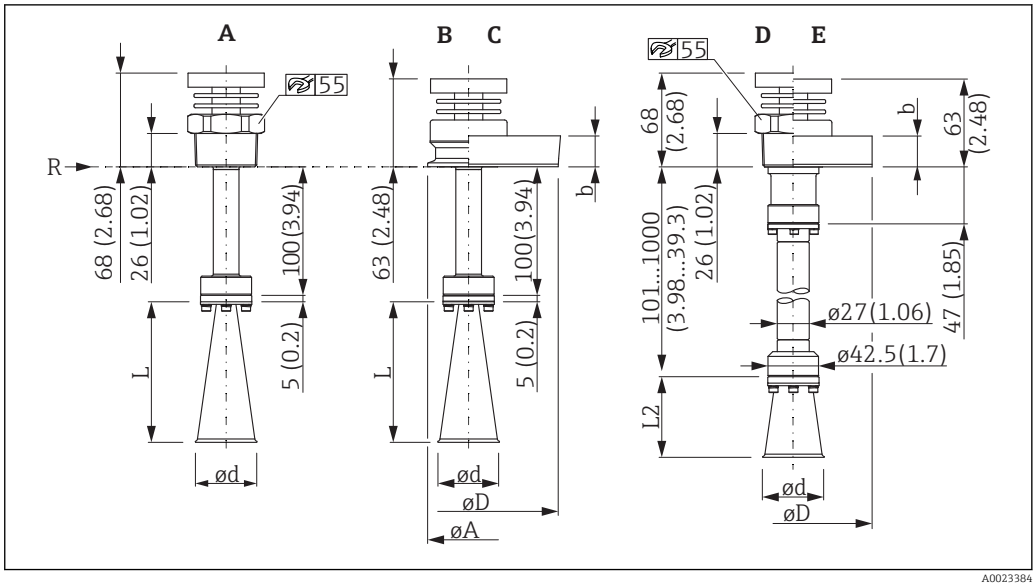

32 *Dimensions of antenna, version with antenna extension. Unit of measurement mm (in)*

A Process connection: thread; antenna extension100 mm (4 in)
B Process connection: Tri-Clamp ISO2852; antenna extension100 mm (4 in)
C Process connection: flange 316L; antenna extension100 mm (4 in)
D Process connection: thread; antenna extension101 to 1000 mm (4 to 40 in)
E Process connection: flange 316L; antenna extension101 to 1000 mm (4 to 40 in)
R Reference point of measurement

Valid for devices with seal
- Viton GLT
- Kalrez

Dimensions of the horn antenna (L, Ød) and the process connections (ØD, b) are listed in the following tables.

FMR51 version T ≤ 250 °C (482 °F)

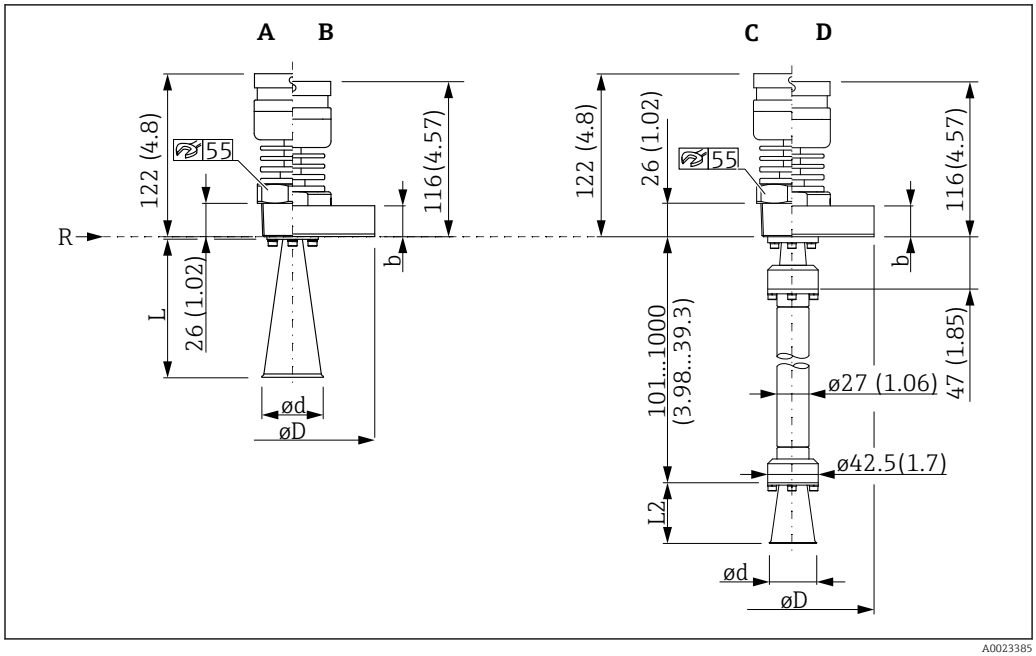

33 Dimensions of antenna, version T < 250 °C (482 °F). Unit of measurement mm (in)

A Process connection: thread
B Process connection: flange 316L
C Process connection: thread; accessory mounted: ..... mm/inch antenna extension
D Process connection: flange 316L; accessory mounted: ..... mm/inch antenna extension
R Reference point of measurement

Valid for devices with seal
Graphite, −40 to +250 °C (−40 to +482 °F)

Dimensions of the horn antenna (L, Ød) and the process connections (ØD, b) are listed in the following tables.

FMR51 version T ≤ 450 °C (842 °F)

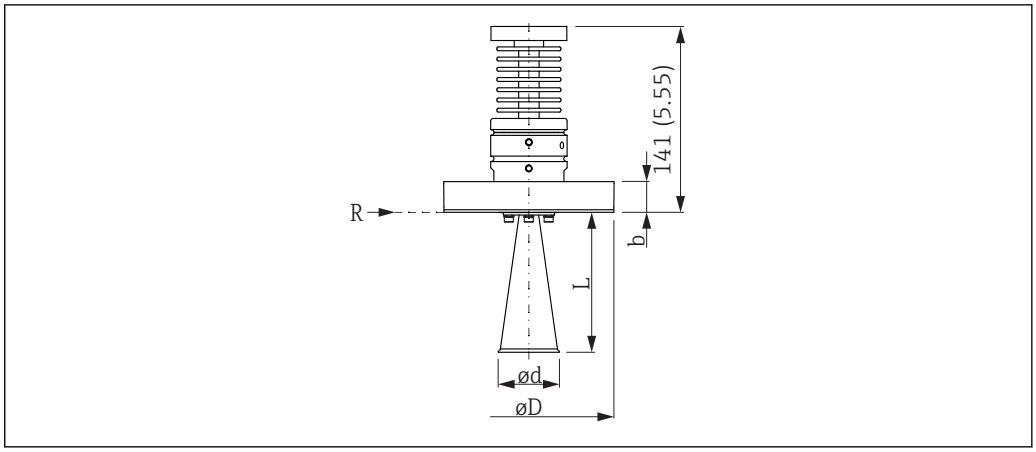

34 *Dimensions of antenna, version T < 450 °C (842 °F). Unit of measurement mm (in)*

Valid for devices with seal
Graphite, −196 to +450 °C (−321 to +842 °F)

Dimensions of the horn antenna (L, Ød) and the process connections (ØD, b) are listed in the following tables.

FMR51 dimensions of horn antenna

Antenna	L	L2	Ød
Horn 40mm/1-1/2"	86 mm (3.39 in)	51 mm (2.01 in)	40 mm (1.57 in)
Horn 50mm/2"	115 mm (4.53 in)	80 mm (3.15 in)	48 mm (1.89 in)
Horn 80mm/3"	211 mm (8.31 in)	176 mm (6.93 in)	75 mm (2.95 in)
Horn 100mm/4"	282 mm (11.1 in)	247 mm (9.72 in)	95 mm (3.74 in)

FMR51 dimensions of process connections

Process connection - flange
Dimensions **ØD** and **b** as per flange standard:
- EN1092-1 (suitable for DIN2527)
- ASME B16.5
- JIS B2220

Tri-Clamp as per ISO2852

Process connection	A	Nominal diameter	Pipe inner diameter	ØD3
Tri-Clamp DN51 (2")	64 mm (2.52 in)	DN51	48.6 mm (1.91 in)	64 mm (2.52 in)
Tri-Clamp DN70-76.1 (3")	91 mm (3.58 in)	DN70	66.8 mm (2.63 in)	91 mm (3.58 in)
		DN76.1	72.9 mm (2.87 in)	

FMR52 with milk pipe connection DIN11851

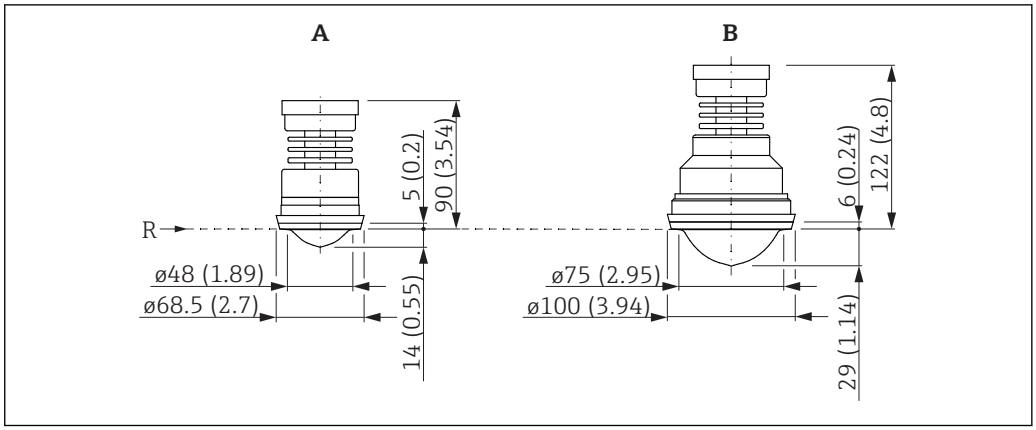

35 Dimensions of device with milk pipe connection DIN11851. Unit of measurement mm (in)

A Antenna: horn 50mm/2"
B Antenna: horn 80mm/3"
R Reference point of measurement

A: Valid for devices with process connection
DIN11851 DN50 PN25 slotted-nut, PTFE>316L

B: Valid for devices with process connection
DIN11851 DN80 PN25 slotted-nut, PTFE>316L

FMR52 with Tri-Clamp connection

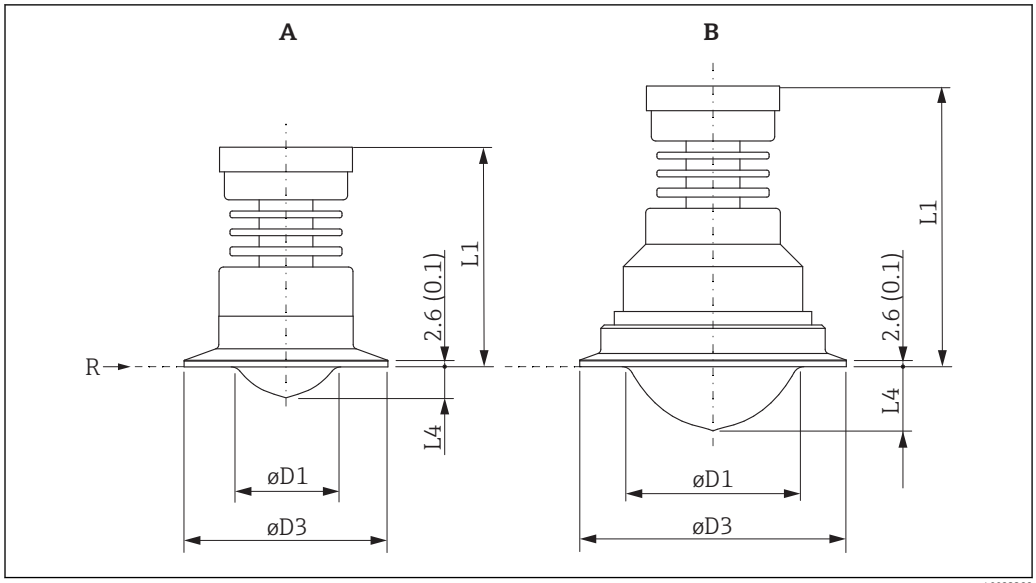

36 *Dimensions of device with Tri-Clamp connection. Unit of measurement mm (in)*

A Antenna: horn 50mm/2"
B Antenna: horn 80mm/3"
R Reference point of measurement

Antenna	ØD1	L1	L4
Horn 50mm/2"	47.5 mm (1.87 in)	93 mm (3.66 in)	14 mm (0.55 in)
Horn 80mm/3"	75 mm (2.95 in)	120 mm (4.72 in)	29 mm (1.14 in)

Tri-Clamp connection as per ISO2852

Process connection	Nominal diameter	Pipe inner diameter	ØD3
Tri-Clamp DN51 (2")	DN51	48.6 mm (1.91 in)	64 mm (2.52 in)
Tri-Clamp DN70-76.1 (3")	DN70	66.8 mm (2.63 in)	91 mm (3.58 in)
	DN76.1	72.9 mm (2.87 in)	
Tri-Clamp DN101.6 (4")	DN101.6	97.6 mm (3.84 in)	119 mm (4.69 in)

Tri-Clamp connection as per DIN32676 Series C or ASME BPE

Process connection	Nominal diameter	Pipe inner diameter	ØD3
Tri-Clamp DN51 (2")	2"	47.5 mm (1.87 in)	64 mm (2.52 in)
Tri-Clamp DN70-76.1 (3")	3"	72.9 mm (2.87 in)	91 mm (3.58 in)
Tri-Clamp DN101.6 (4")	4"	97.38 mm (3.83 in)	119 mm (4.69 in)

FMR52 with flange

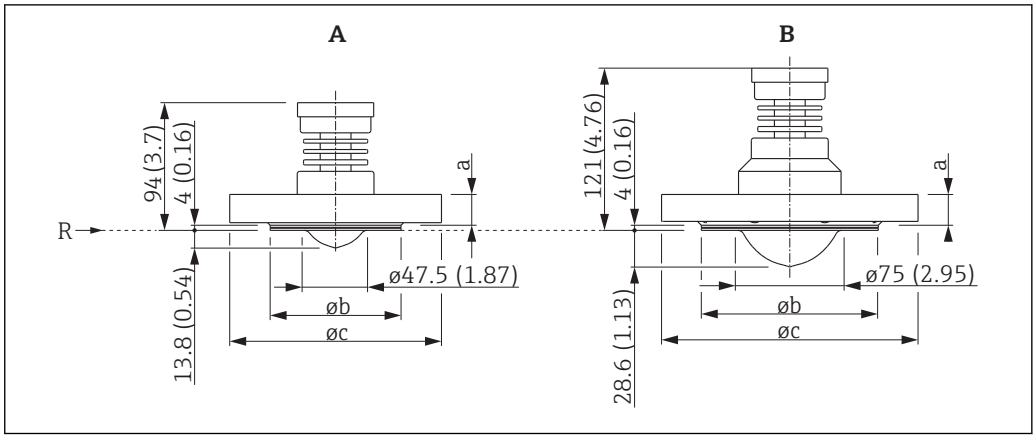

37 *Dimensions of device with flange. Unit of measurement mm (in)*

A Antenna: horn 50mm/2"
B Antenna: horn 80mm/3"
R Reference point of measurement

Flanges as per EN1092-1 (suitable for DIN2527)

Antenna	Process connection	a	Øb	Øc
Horn 50mm/2"	Flange DN50 PN10/16	18 mm (0.71 in)	102 mm (4.02 in)	165 mm (6.5 in)
Horn 80mm/3"	Flange DN80 PN10/16	20 mm (0.79 in)	138 mm (5.43 in)	200 mm (7.87 in)
	Flange DN100 PN10/16	20 mm (0.79 in)	158 mm (6.22 in)	220 mm (8.66 in)
	Flange DN150 PN10/16	22 mm (0.87 in)	212 mm (8.35 in)	285 mm (11.2 in)
	Flange DN80 PN25/40	24 mm (0.94 in)	138 mm (5.43 in)	200 mm (7.87 in)

Flanges as per ANSI B16.5

Antenna	Process connection	a	Øb	Øc
Horn 50mm/2"	Flange 2" Cl.150	19.5 mm (0.77 in)	92 mm (3.62 in)	150 mm (6 in)
Horn 80mm/3"	Flange 3" Cl.150	24.3 mm (0.96 in)	127 mm (5 in)	190 mm (7.5 in)
	Flange 4" Cl.150	24.3 mm (0.96 in)	158 mm (6.22 in)	230 mm (9 in)
	Flange 6" Cl.150	25.9 mm (1.02 in)	212 mm (8.35 in)	280 mm (11 in)
	Flange 3" Cl.300	29.0 mm (1.14 in)	127 mm (5 in)	210 mm (8.27 in)
	Flange 4" Cl.300	32.2 mm (1.27 in)	158 mm (6.22 in)	255 mm (10 in)
	Flange 6" Cl.300	37 mm (1.46 in)	212 mm (8.35 in)	320 mm (12.6 in)

Flanges as per JIS B2220

Antenna	Process connection	a	Øb	Øc
Horn 50mm/2"	Flange 10K 50A	16 mm (0.63 in)	96 mm (3.78 in)	155 mm (6.1 in)
Horn 80mm/3"	Flange 10K 80A	18 mm (0.71 in)	127 mm (5 in)	185 mm (7.28 in)
	Flange 10K 100A	18 mm (0.71 in)	151 mm (5.94 in)	210 mm (8.27 in)
	Flange 10K 150A	22 mm (0.87 in)	212 mm (8.35 in)	280 mm (11 in)

Weight

Housing

Part	Weight
GT18 housing - stainless steel	Approx. 4.5 kg (9.9 lb)
GT19 housing - plastic	Approx. 1.2 kg (2.7 lb)
GT20 housing - aluminum	Approx. 1.9 kg (4.2 lb)

Antenna and process connection

Device	Weight of antenna/process connection
FMR51	Max. 3.0 kg (6.6 lb) + flange weight [1)]
FMR52	Max. 4 kg (8.8 lb) + flange weight [1)]

1) For the flange weight, see Technical Information TI00426F.

Materials: Housing GT18 (stainless steel, corrosion-resistant)

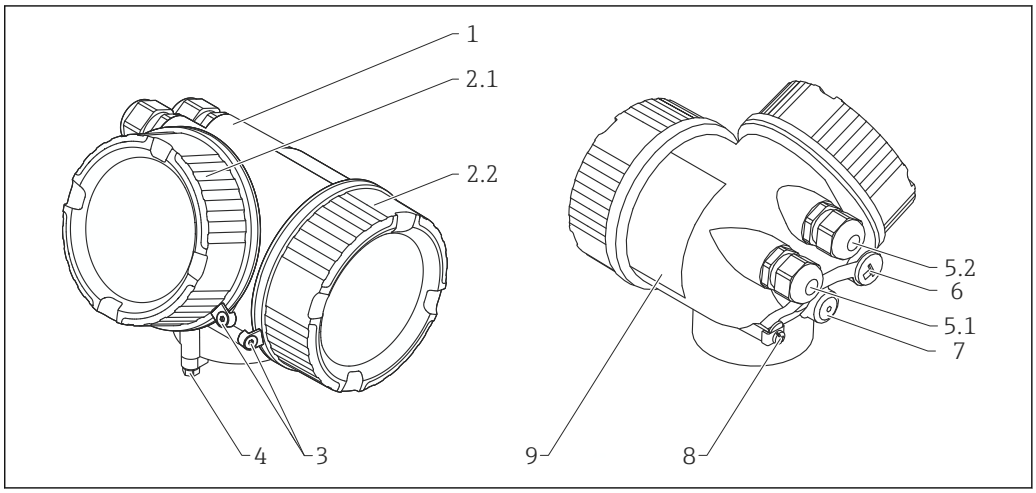

A0036037

No.	Component part	Material
1	Housing	CF3M similar to 316L/1.4404
2.1	Electronics compartment cover	▪ Cover: CF3M (similar to 316L/ 1.4404) ▪ Window: glass ▪ Cover seal: NBR ▪ Window seal: NBR ▪ Thread coating: graphite-based lubricant varnish
2.2	Connection compartment cover	▪ Cover: CF3M (similar to 316L/ 1.4404) ▪ Cover seal: NBR ▪ Thread coating: graphite-based lubricant varnish
3	Cover clamp	▪ Screw: A4 ▪ Clamp: 316L (1.4404)
4	Safety device on housing neck	▪ Screw: A4-70 ▪ Clamp: 316L (1.4404)

5.1	Dummy plug, coupling, adapter or connector (depending on device version)	▪ Dummy plug, depending on device version:
		  ▪ PE
		  ▪ PBT-GF
		▪ Coupling: 316L (1.4404) or brass, nickel-plated
		▪ Adapter: 316L (1.4404/1.4435)
		▪ Seal: EPDM
		▪ Connector M12: brass, nickel-plated [1)]
		▪ Connector 7/8": 316 (1.4401) [2)]

5.2	Dummy plug, coupling or adapter (depending on device version)	▪ Dummy plug: 316L (1.4404) ▪ Coupling: 316L (1.4404) or brass, nickel-plated ▪ Adapter: 316L (1.4404/1.4435) ▪ Seal: EPDM
6	Dummy plug or M12 socket (depending on device version)	▪ Dummy plug: 316L (1.4404) ▪ M12 socket: 316L (1.4404)
7	Pressure compensation vent	316L (1.4404)
8	Ground terminal	▪ Screw: A4 ▪ Spring washer: A4 ▪ Clamp: 316L (1.4404) ▪ Bracket: 316L (1.4404)
9	Nameplate	▪ Plate: 316L (1.4404) ▪ Groove pin: A4 (1.4571)

1) In the version with M12 connector, the seal material is Viton.
2) In the version with 7/8" connector, the seal material is NBR.

Materials: GT19 housing (plastic)

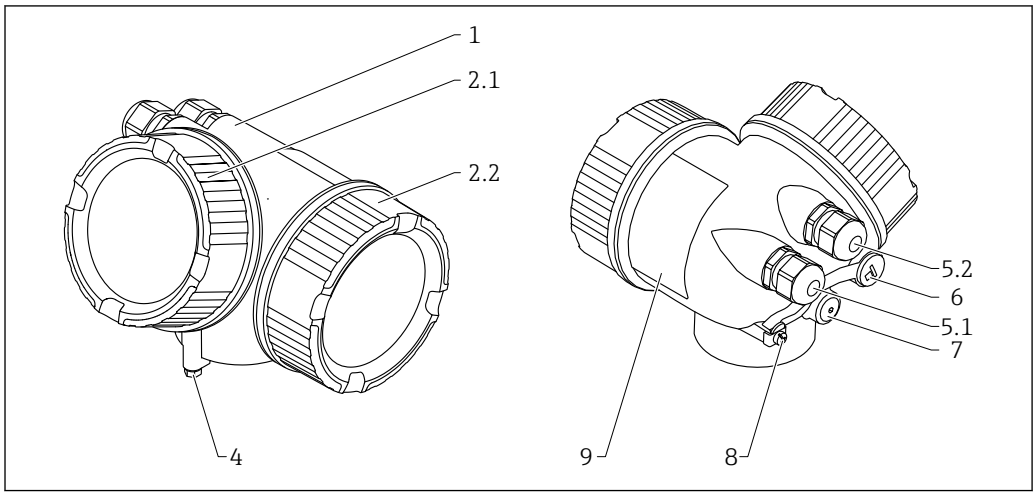

A0013788

No.	Component part	Material
1	Housing	PBT
2.1	Electronics compartment cover	▪ Sight glass: PC ▪ Rim: PBT-PC ▪ Cover seal: EPDM ▪ Thread coating: graphite-based lubricant varnish
2.2	Connection compartment cover	▪ Cover: PBT ▪ Cover seal: EPDM ▪ Thread coating: graphite-based lubricant varnish
4	Safety device on housing neck	▪ Screw: A4-70 ▪ Clamp: 316L (1.4404)

5.1	Dummy plug, coupling, adapter or connector (depending on device version)	▪ Dummy plug, depending on device version:
		  ▪ PE
		  ▪ PBT-GF
		▪ Coupling, depending on device version:
		  ▪ Brass (CuZn), nickel-plated
		  ▪ PA
		▪ Adapter: 316L (1.4404/1.4435)
		▪ Seal: EPDM
		▪ Connector M12: brass, nickel-plated [1)]
		▪ Connector 7/8": 316 (1.4401) [2)]

5.2	Dummy plug, coupling or adapter (depending on device version)	▪ Dummy plug, depending on device version:
		  ▪ PE
		  ▪ PBT-GF
		  ▪ Steel, galvanized
		▪ Coupling, depending on device version:
		  ▪ Brass (CuZn), nickel-plated
		  ▪ PA
		▪ Adapter: 316L (1.4404/1.4435)
		▪ Seal: EPDM

6	Dummy plug or M12 socket (depending on device version)	▪ Dummy plug: brass (CuZn), nickel-plated ▪ M12 socket: GD-Zn, nickel-plated
7	Pressure compensation vent	Brass (CuZn), nickel-plated
8	Ground terminal	▪ Screw: A2 ▪ Spring washer: A4 ▪ Clamp: 304 (1.4301) ▪ Bracket: 304 (1.4301)
9	Adhesive nameplate	Plastic

1) In the version with M12 connector, the seal material is Viton.
2) In the version with 7/8" connector, the seal material is NBR.

Materials: GT20 housing (die-cast aluminum, powder-coated)

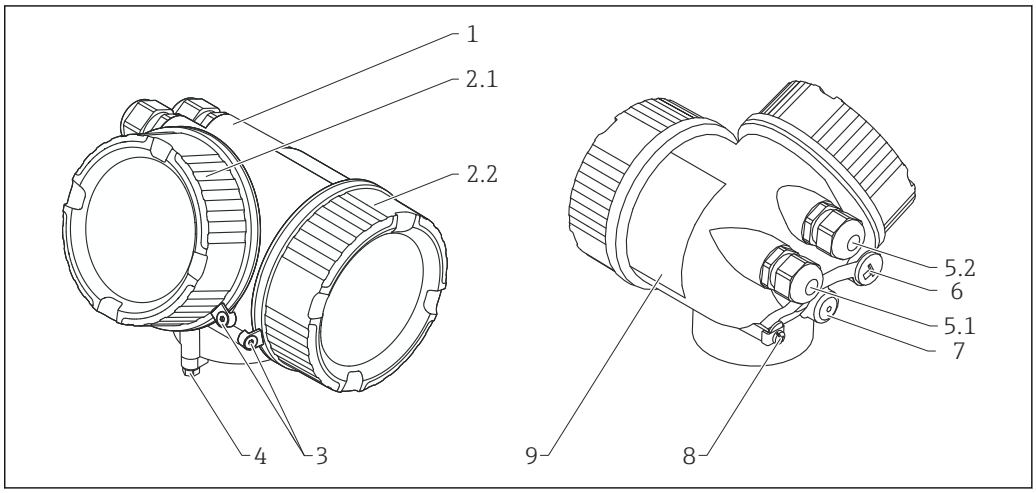

A0036037

No.	Component part	Material
1	Housing, RAL 5012 (blue)	▪ Housing: AlSi10Mg(<0.1% Cu) ▪ Coating: polyester
2.1	Electronics compartment cover, RAL 7035 (gray)	▪ Cover: AlSi10Mg(<0.1% Cu) ▪ Window: glass ▪ Cover seal: NBR ▪ Window seal: NBR ▪ Thread coating: graphite-based lubricant varnish
2.2	Connection compartment cover, RAL 7035 (gray)	▪ Cover: AlSi10Mg(<0.1% Cu) ▪ Cover seal: NBR ▪ Thread coating: graphite-based lubricant varnish
3	Cover clamp	▪ Screw: A4 ▪ Clamp: 316L (1.4404)
4	Safety device on housing neck	▪ Screw: A4-70 ▪ Clamp: 316L (1.4404)

5.1	Dummy plug, coupling, adapter or connector (depending on device version)	▪ Dummy plug, depending on device version:
		  ▪ PE
		  ▪ PBT-GF
		▪ Coupling, depending on device version:
		  ▪ Brass (CuZn), nickel-plated
		  ▪ PA
		▪ Adapter: 316L (1.4404/1.4435)
		▪ Seal: EPDM
		▪ M12 plug: brass, nickel-plated [1)]
		▪ 7/8" plug: 316 (1.4401) [2)]

5.2	Dummy plug, coupling or adapter (depending on device version)	▪ Dummy plug, depending on device version:
		  ▪ PE
		  ▪ PBT-GF
		  ▪ Steel, galvanized
		▪ Coupling, depending on device version:
		  ▪ Brass (CuZn), nickel-plated
		  ▪ PA
		▪ Adapter: 316L (1.4404/1.4435)
		▪ Seal: EPDM

6	Dummy plug or M12 socket (depending on device version)	▪ Dummy plug: brass (CuZn), nickel-plated ▪ M12 socket: GD-Zn, nickel-plated
7	Pressure compensation vent	Brass (CuZn), nickel-plated

No.	Component part	Material
8	Ground terminal	▪ Screw: A2 ▪ Spring washer: A2 ▪ Clamp: 304 (1.4301) ▪ Bracket: 304 (1.4301)
9	Adhesive nameplate	Plastic

1) In the version with the M12 plug, the seal material is Viton (different from standard).
2) In the version with the 7/8" plug, the seal material is NBR (different from standard).

Materials: antenna and process connection

FMR51

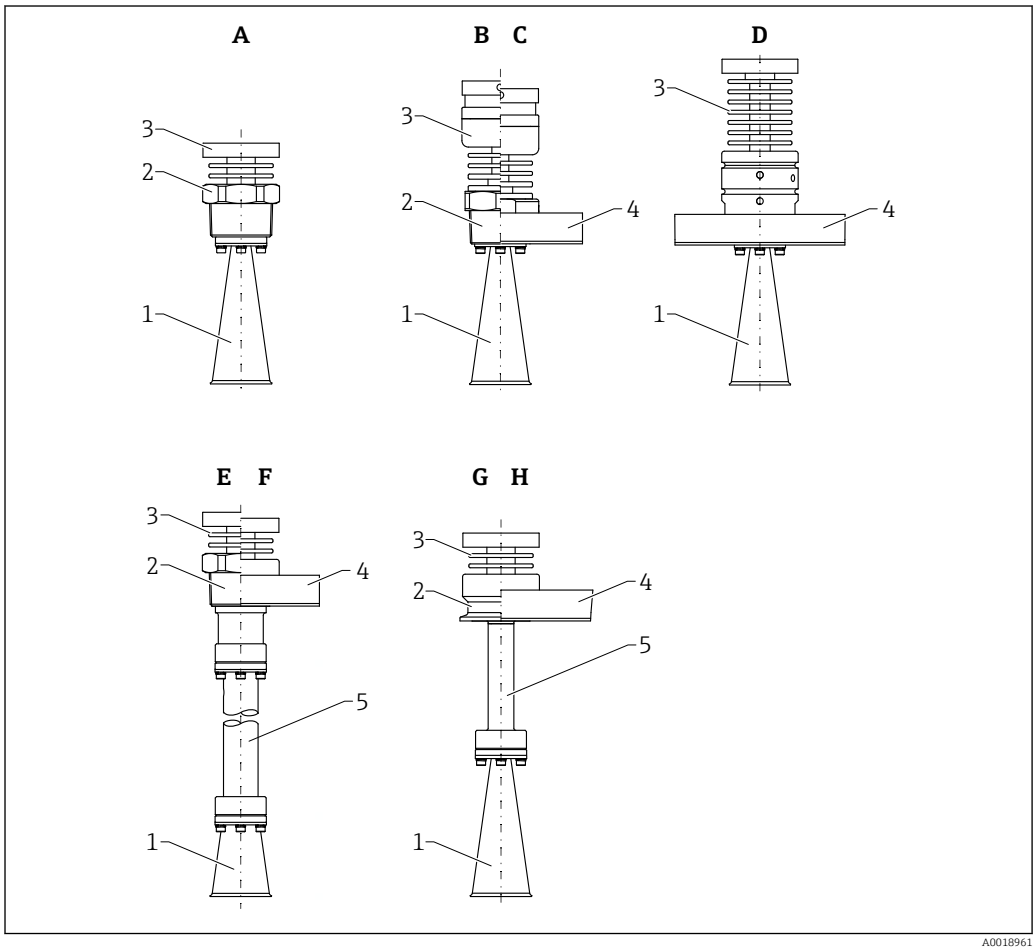

A0018961

A Version with threaded adapter
B XT version with threaded connection
C XT version with flange
D HT version with flange
E Threaded connection version with antenna extension >100 mm (3.94 in) to 500 mm (19.7 in)
F Flange version with antenna extension >100 mm (3.94 in) to 500 mm (19.7 in)
G Clamp fitting version with antenna extension 100 mm (3.94 in)
H Flange version with antenna extension 100 mm (3.94 in)

Item	Component part	Material	
1	Horn	316L (1.4404)	Alloy C22 (2.4602)
	Screws	A4	Alloy C22 (2.4602)
	Spring washer (compact version)	A4	Not available
	Nordlock washer (extension >100 mm, XT and HT version)	A4	Not available

Item	Component part	Material		
	Process separation cone	Standard: PTFE	XT: PEEK	HT: Al_2O_3
	Seal	Standard: ▪ Viton: FKM ▪ Kalrez: FFKM (K6375)	XT: Graphite	HT: Graphite
2	Process adapter	316L (1.4404)		
	Shim			
3	Housing adapter	316L (1.4404)		
	Temperature reduction (XT)	316L (1.4404)		
	Intermediate adapter (HT)	316L (1.4404)		
	Process adapter	316L (1.4404)		
4	Flange	316L (1.4404/1.4435) optional AlloyC22 (2.4602) cladded		
5	Pipe extension + adapter	316L (1.4404)		
	Shim			

FMR52

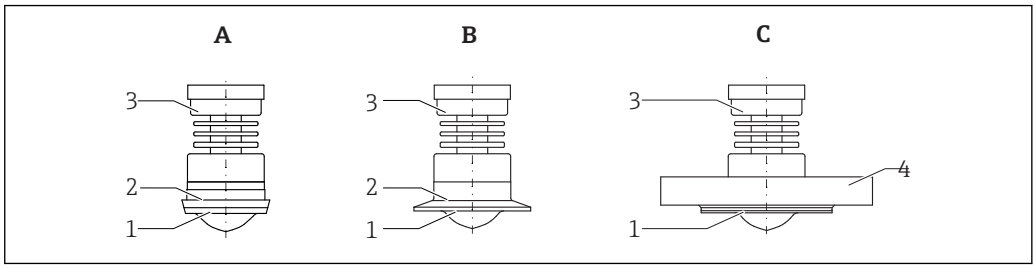

A0018951

A Dairy coupling
B Clamp fitting
C Version with flange

Item	Component part	Material
1	Antenna with cladding	PTFE (in accordance with FDA 21 CFR 177.1550 and USP <88> Class VI)
2	Process connection	316L (1.4435)
3	Adapter	304 (1.4301)
4	Flange	316L (1.4404/1.4435)

Materials: Weather protection cover

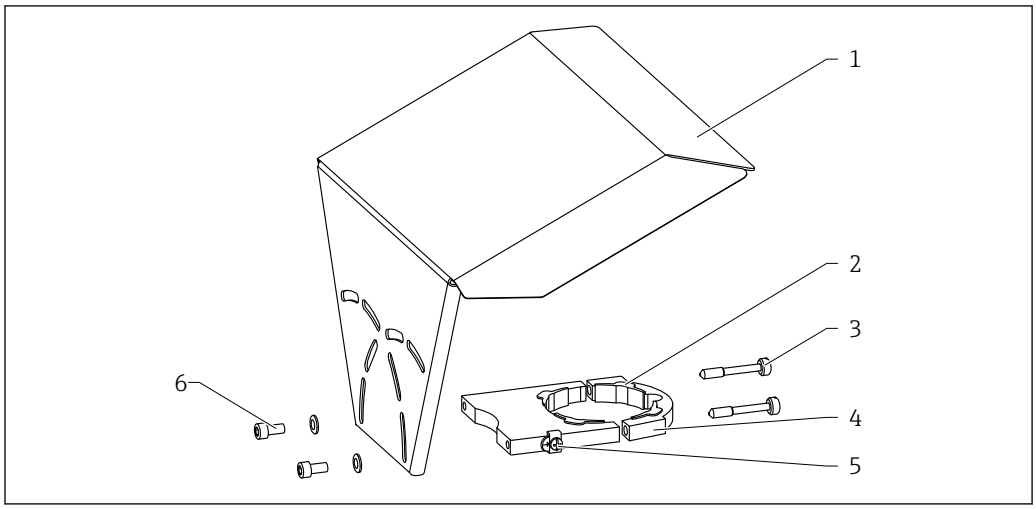

A0015473

No.	Component: Material
1	Protection cover: 316L (1.4404)
2	Rubber molded part (4x): EPDM
3	Tensioning screw: 316L (1.4404) + carbon thread
4	Holder: 316L (1.4404)
5	Ground terminal ▪ Screw: A4 ▪ Spring washer: A4 ▪ Clamp: 316L (1.4404) ▪ Bracket: 316L (1.4404)
6	▪ Washer: A4 ▪ Cylinder screw: A4-70

Operability

Operating concept

Operator-oriented menu structure for user-specific tasks
- Commissioning
- Operation
- Diagnostics
- Expert level

Operating languages
- English
- Deutsch
- Français
- Español
- Italiano
- Nederlands
- Portuguesa
- Polski
- русский язык (Russian)
- Svenska
- Türkçe
- 中文 (Chinese)
- 日本語 (Japanese)
- 한국어 (Korean)
- Bahasa Indonesia
- tiếng Việt (Vietnamese)
- čeština (Czech)

Feature 500 of the product structure determines which of these languages is preset on delivery.

Quick and save commissioning
- Interactive wizard with graphical interface for easy commissioning via FieldCare/DeviceCare
- Menu guidance with brief explanations of the individual parameter functions
- Standardized operation at the device and in the operating tools

Integrated data storage device (HistoROM)
- Enables transfer of configuration when changing electronic modules
- Records up to 100 event messages in the device
- Records up to 1000 measured values in the device
- Saves the signal curve on commissioning which can later be used as a reference.

Efficient diagnostics increase measurement reliability
- Remedy information is integrated in plain text
- Diverse simulation options and line recorder functions

Integrated Bluetooth module (option for HART devices)
- Easy and fast setup via SmartBlue (app)
- No additional tools or adapters required
- Signal curve via SmartBlue (app)
- Encrypted single point-to-point data transmission (Fraunhofer-Institut, third party, tested) and password-protected communication via Bluetooth® wireless technology

Local operation

Operation with	*Pushbuttons*	*Touch Control*
Order code for "Display; Operation"	Option **C** "SD02"	Option **E** "SD03"
	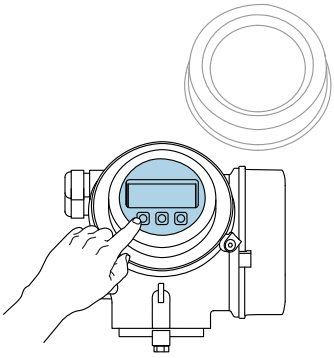 A0036312	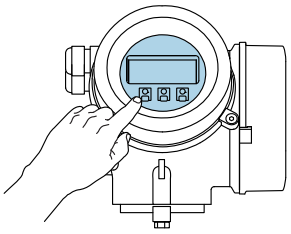 A0036313
Display elements	4-line display	4-line display white background lighting; switches to red in event of device error
	Format for displaying measured variables and status variables can be individually configured	
	Permitted ambient temperature for the display: –20 to +70 °C (–4 to +158 °F) The readability of the display may be impaired at temperatures outside the temperature range.	
Operating elements	local operation with 3 push buttons (⊞, ⊟, Ⓔ)	external operation via touch control; 3 optical keys: ⊞, ⊟, Ⓔ
	Operating elements also accessible in various hazardous areas	
Additional functionality	Data backup function The device configuration can be saved in the display module.	
	Data comparison function The device configuration saved in the display module can be compared to the current device configuration.	
	Data transfer function The transmitter configuration can be transmitted to another device using the display module.	

Operation with remote display and operating module FHX50

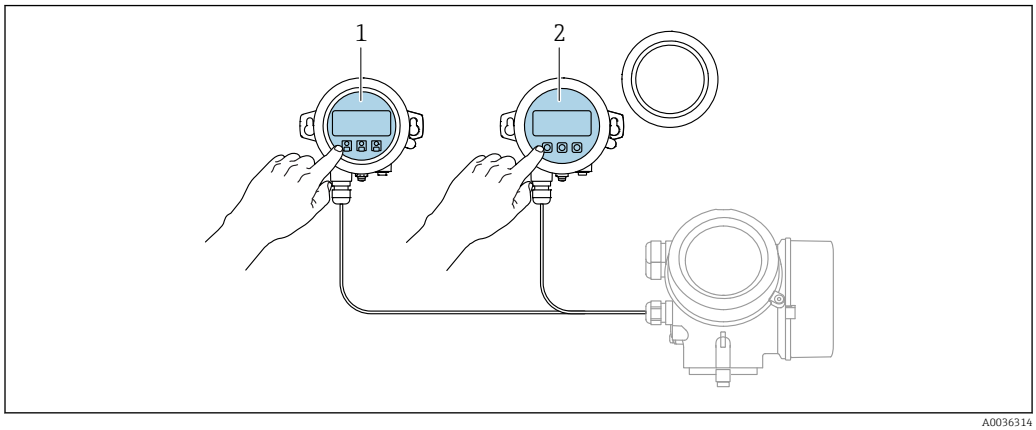

A0036314

38 FHX50 operating options

1 Display and operating module SD03, optical keys; can be operated through the glass of the cover
2 Display and operating module SD02, push buttons; cover must be removed

Operation via Bluetooth® wireless technology

Requirements

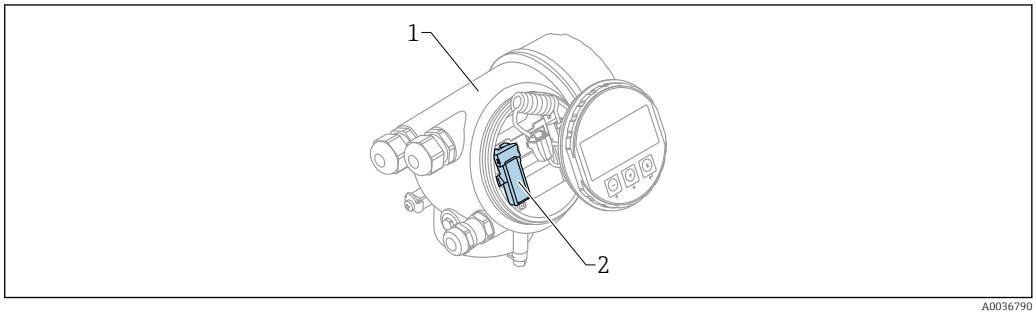

A0036790

39 Device with Bluetooth module

1 Electronics housing of the device
2 Bluetooth module

This operation option is only available for devices with Bluetooth module. There are the following options:
- The device has been ordered with a Bluetooth module:
  Feature 610 "Accessory Mounted", option NF "Bluetooth"
- The Bluetooth module has been ordered as an accessory (ordering number: 71377355) and has been mounted. See Special Documentation SD02252F.

Operation via SmartBlue (app)

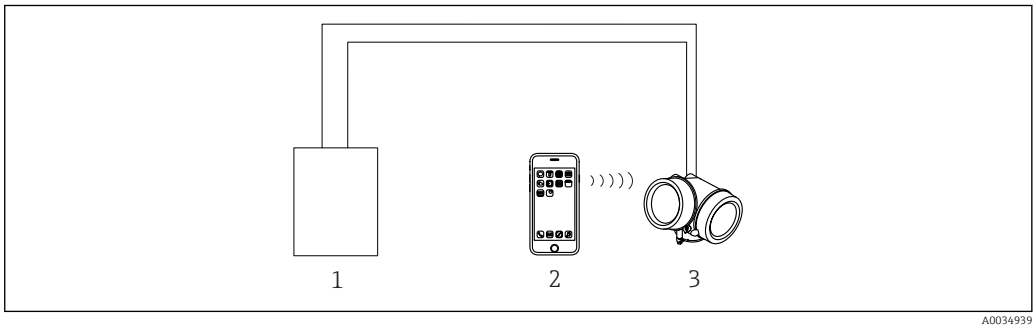

A0034939

40 Operation via SmartBlue (app)

1 Transmitter power supply unit
2 Smartphone / tablet with SmartBlue (app)
3 Transmitter with Bluetooth module

Remote operation

Via HART protocol

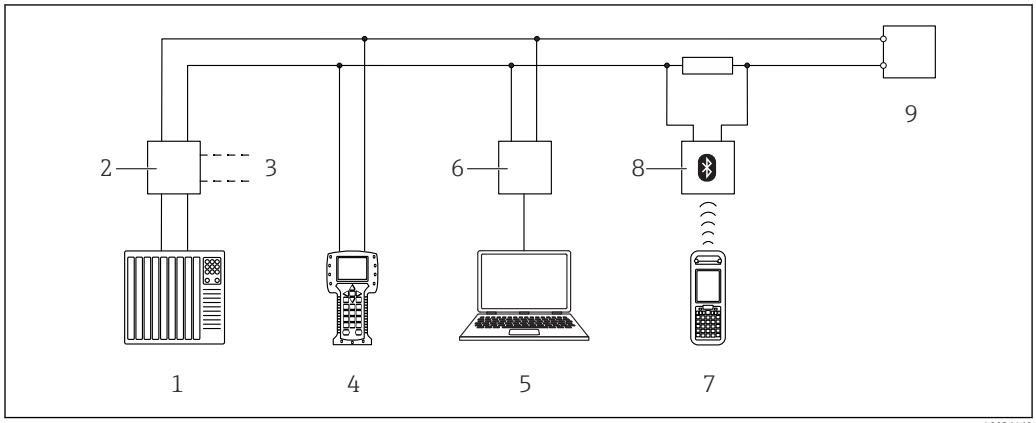

41 Options for remote operation via HART protocol

1 *PLC (Programmable Logic Controller)*
2 *Transmitter power supply unit, e.g. RN221N (with communication resistor)*
3 *Connection for Commubox FXA191, FXA195 and Field Communicator 375, 475*
4 *Field Communicator 475*
5 *Computer with operating tool (e.g. DeviceCare/FieldCare , AMS Device Manager, SIMATIC PDM)*
6 *Commubox FXA191 (RS232) or FXA195 (USB)*
7 *Field Xpert SFX350/SFX370*
8 *VIATOR Bluetooth modem with connecting cable*
9 *Transmitter*

Via PROFIBUS PA protocol

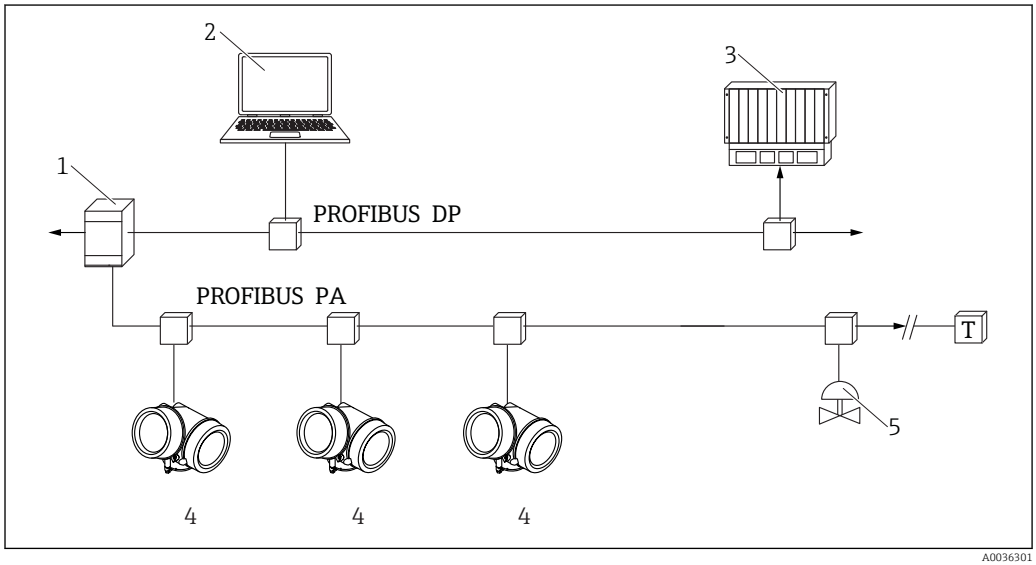

42 Options for remote operation via PROFIBUS PA protocol

1 *Segment coupler*
2 *Computer with Profiboard/Proficard and operating tool (e.g. DeviceCare/FieldCare*
3 *PLC (Progrommable Logic Controller)*
4 *Transmitter*
5 *Additional functions (valves etc.)*

Via FOUNDATION Fieldbus

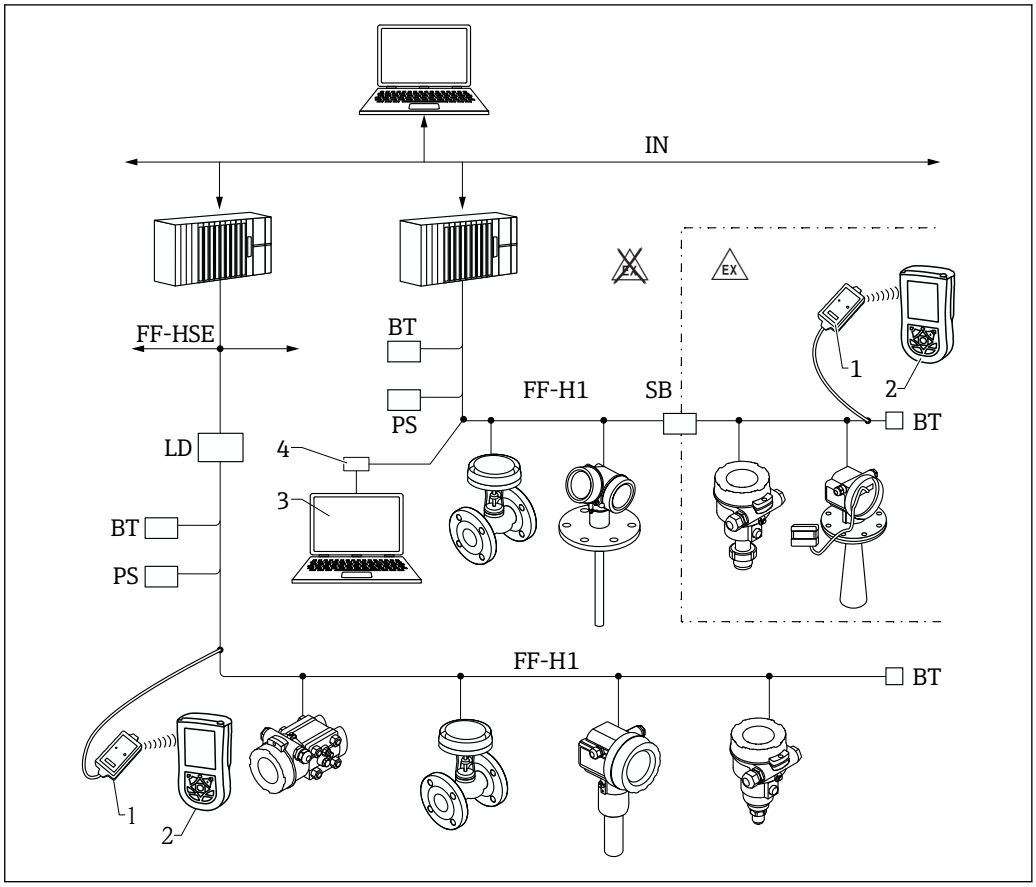

43 FOUNDATION Fieldbus system architecture with associated components

1 FFblue Bluetooth modem
2 Field Xpert SFX350/SFX370
3 DeviceCare/FieldCare
4 NI-FF interface card

IN	Industrial network
FF-HSE	High Speed Ethernet
FF-H1	FOUNDATION Fieldbus-H1
LD	Linking Device FF-HSE/FF-H1
PS	Bus Power Supply
SB	Safety Barrier
BT	Bus Terminator

DeviceCare/FieldCare via service interface (CDI)

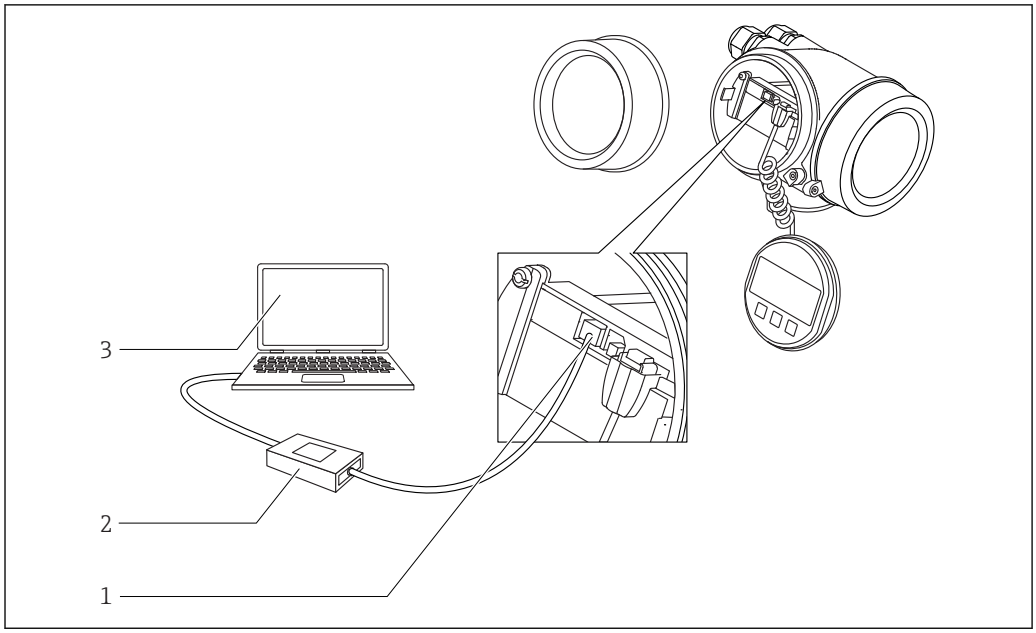

44 *DeviceCare/FieldCare via service interface (CDI)*

1 *Service interface (CDI) of the instrument (= Endress+Hauser Common Data Interface)*
2 *Commubox FXA291*
3 *Computer with DeviceCare/FieldCare operating tool*

Integration in tank gauging system

The Endress+Hauser Tank Side Monitor NRF81 provides integrated communications for sites with multiple tanks, each with one or more sensors on the tank, such as radar, spot or average temperature, capacitive probe for water detection and/or pressure sensors. Multiple protocols out of the Tank Side Monitor guarantee connectivity to nearly any of the existing industry standard tank gauging protocols. Optional connectivity of analog 4...20 mA sensors, digital I/O and analog output simplify full tank sensor integration. Use of the proven concept of the intrinsically safe HART bus for all on-tank sensors yields extremely low wiring costs, while at the same time providing maximum safety, reliability and data availability.

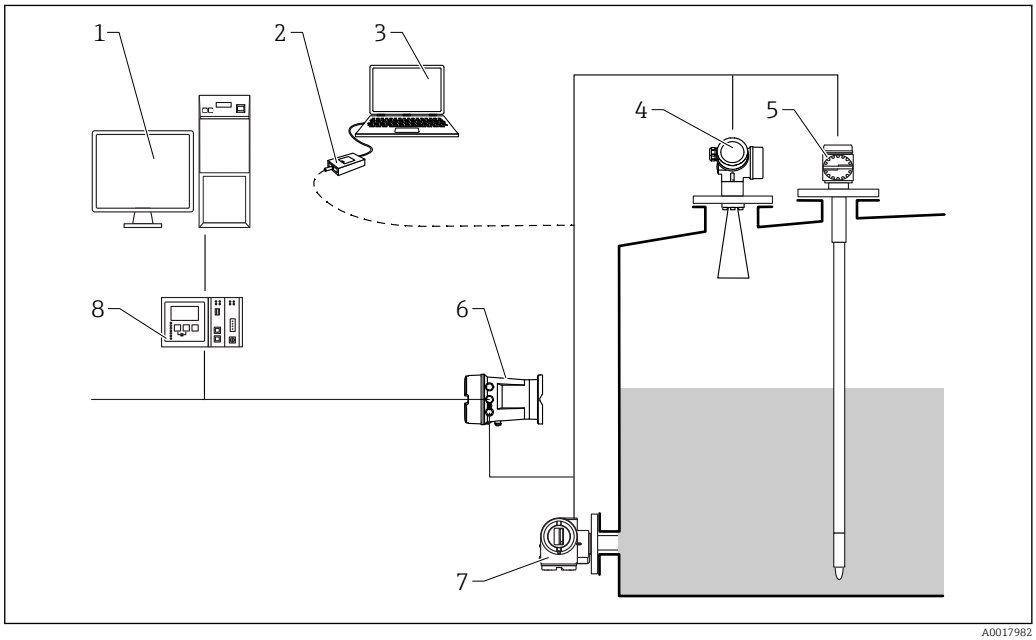

45 *The complete measuring system consists of:*

1 *Tankvision workstation*
2 *Commubox FXA195 (USB) - optional*
3 *Computer with operating tool (ControlCare) - optional*
4 *Level measuring device*
5 *Temperature measuring device*
6 *Tank Side Monitor NRF81*
7 *Pressure measuring device*
8 *Tankvision Tank Scanner NXA820*

SupplyCare inventory management software

SupplyCare is a web-based operating program for coordinating the flow of material and information along the supply chain. SupplyCare provides a comprehensive overview of the levels of geographically distributed tanks and silos, for instance, providing complete transparency over the current inventory situation, regardless of time and location.

Based on the measuring and transmission technology installed onsite, the current inventory data are collected and sent to SupplyCare. Critical levels are clearly indicated and calculated forecasts provide additional security for material requirements planning.

The main functions of SupplyCare:

Inventory visualization

SupplyCare determines the inventory levels in tanks and silos at regular intervals. It displays current and historical inventory data and calculated forecasts of future demand. The overview page can be configured to suit the user's preferences.

Master data management

With SupplyCare you can create and manage the master data for locations, companies, tanks, products and users, as well as user authorization.

Report Configurator

The Report Configurator can be used to create personalized reports quickly and easily. The reports can be saved in a variety of formats, such as Excel, PDF, CSV and XML. The reports can be transmitted in many ways, such as by http, ftp or e-mail.

Event management

Events, such as when levels drop below the safety stock level or plan points, are indicated by the software. In addition, SupplyCare can also notify pre-defined users by e-mail.

Alarms

If technical problems occur, e.g. connection issues, alarms are triggered and alarm e-mails are sent to the System Administrator and the Local System Administrator.

Delivery planning

The integrated delivery planning function automatically generates an order proposal if a pre-set minimum inventory level is undershot. Scheduled deliveries and disposals are monitored continuously by SupplyCare. SupplyCare notifies the user if scheduled deliveries and disposals are not going to be met as planned.

Analysis

In the Analysis module, the most important indicators for the inflow and outflow of the individual tanks are calculated and displayed as data and charts. Key indicators of material management are automatically calculated and form the basis for optimizing the delivery and storage process.

Geographical visualization

All the tanks and the tank inventories are represented graphically on a map (based on Google Maps). The tanks and inventory situations can be filtered by tank group, product, supplier or location.

Multi-language support

The multi-language user interface supports 9 languages, thereby enabling global collaboration on a single platform. The language and settings are recognized automatically using the browser settings.

SupplyCare Enterprise

SupplyCare Enterprise runs by default as a service under Microsoft Windows on an application server in an Apache Tomcat environment. The operators and administrators operate the application via a Web browser from their workstations.

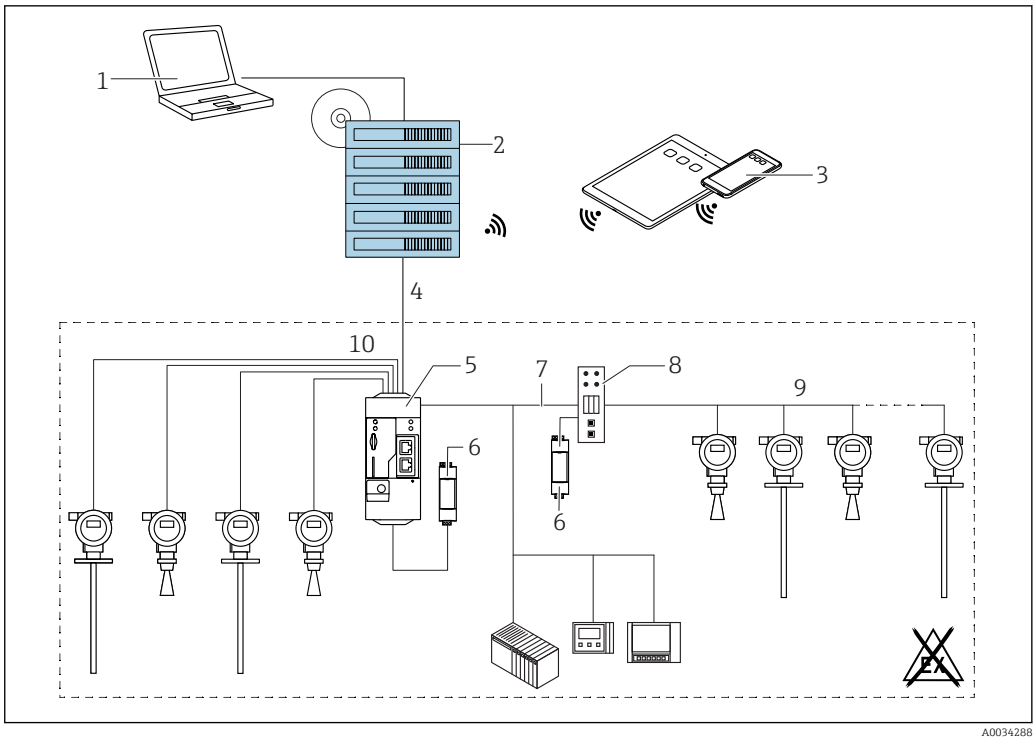

46 Example of inventory management platform with SupplyCare Enterprise SCE30B

1 *SupplyCare Enterprise (via Web browser)*
2 *SupplyCare Enterprise installation*
3 *SupplyCare Enterprise on mobile devices (via Web browser)*
4 *Ethernet/WLAN/UMTS*
5 *Fieldgate FXA42*
6 *Power supply 24 V DC*
7 *Modbus TCP via Ethernet as server/client*
8 *Converter from Modbus to HART Multidrop*
9 *HART Multidrop*
10 *4 x 4 to 20 mA analog input (2-wire/4-wire)*

Cloud-based application: SupplyCare Hosting

SupplyCare Hosting is offered as a hosting service (software as a service). Here, the software is installed within the Endress+Hauser IT infrastructure and made available to the user in the Endress +Hauser portal.

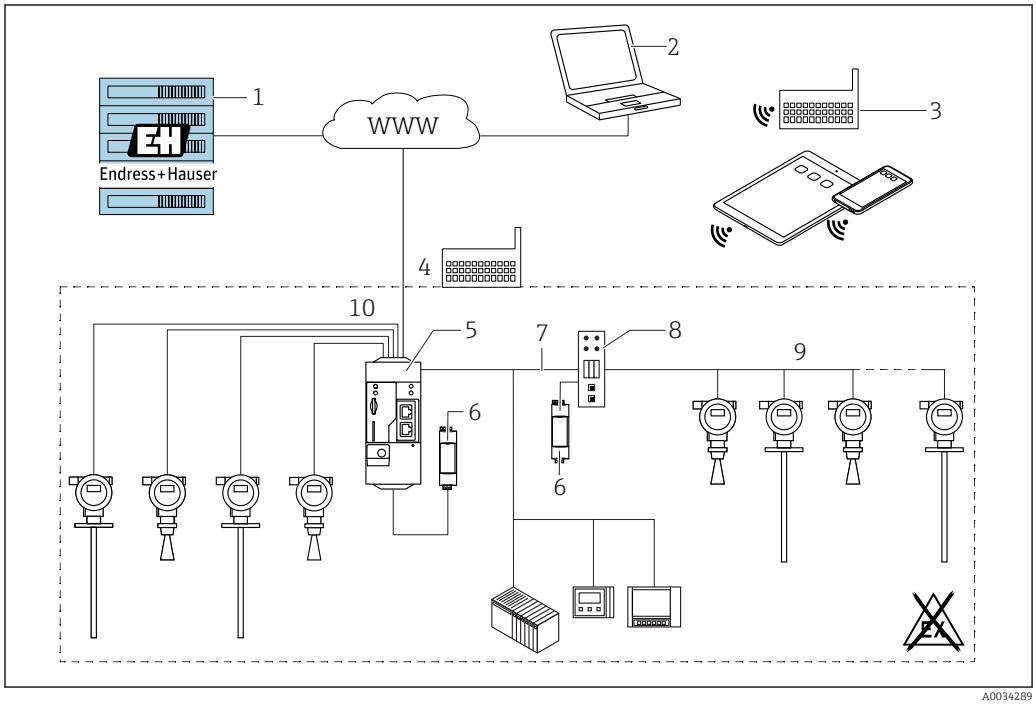

47 *Example of inventory management platform with SupplyCare Hosting SCH30*

1 *SupplyCare Hosting installation in Endress+Hauser data center*
2 *PC workstation with Internet connection*
3 *Warehouse locations with Internet connection via 2G/3G with FXA42 or FXA30*
4 *Warehouse locations with Internet connection with FXA42*
5 *Fieldgate FXA42*
6 *Power supply 24 V DC*
7 *Modbus TCP via Ethernet as server/client*
8 *Converter from Modbus to HART Multidrop*
9 *HART Multidrop*
10 *4 x 4 to 20 mA analog input (2-wire/4-wire)*

With SupplyCare Hosting, users do not need to make the initial software purchase or install and run the IT infrastructure needed. Endress+Hauser constantly update SupplyCare Hosting and enhance the capability of the software in conjunction with the customer. The hosted version of SupplyCare is thus always up-to-date and can be customized to meet different customer requirements. Other services are also offered in addition to the IT infrastructure and the software that is installed in a secure, redundant Endress+Hauser data center. These services include defined availability of the global Endress+Hauser Service and Support Organization and defined response times in a service event.

Certificates and approvals

Currently available certificates and approvals can be called up via the product configurator.

CE mark

The measuring system meets the legal requirements of the applicable EU Directives. These are listed in the corresponding EU Declaration of Conformity along with the standards applied.

Endress+Hauser confirms successful testing of the device by affixing to it the CE mark.

RoHS

The measuring system complies with the substance restrictions of the Restriction on Hazardous Substances Directive 2011/65/EU (RoHS 2).

RCM-Tick marking

The supplied product or measuring system meets the ACMA (Australian Communications and Media Authority) requirements for network integrity, interoperability, performance characteristics as well as health and safety regulations. Here, especially the regulatory arrangements for electromagnetic compatibility are met. The products are labelled with the RCM- Tick marking on the name plate.

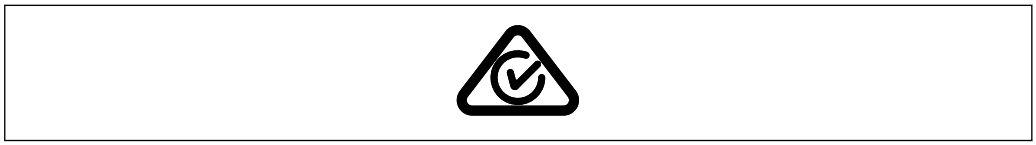

A0029561

Ex approval

- ATEX
- IEC Ex
- CSA
- FM
- NEPSI
- KC
- INMETRO
- JPN

Additional safety instructions must be followed for use in hazardous areas. Please refer to the separate "Safety Instructions" (XA) document included in the delivery. Reference to the applicable XA can be found on the nameplate.

Dual seal according to ANSI/ISA 12.27.01

The devices have been designed according to ANSI/ISA 12.27.01 as dual seal devices, allowing the user to waive the use and save the cost of installing external secondary process seals in the conduit as required by the process sealing sections of ANSI/NFPA 70 (NEC) and CSA 22.1 (CEC) These instruments comply with the North-American installation practice and provide a very safe and cost-saving installation for pressurized applications with hazardous fluids.

Further information can be found in the Safety Instructions (XA) of the relevant devices.

Functional safety

Use for level monitoring (MIN, MAX, range) up to SIL 3 (homogeneous or diverse redundancy), independently evaluated by TÜV Rheinland in accordance with IEC 61508, refer to the "Functional Safety Manual" for information.

WHG

WHG approval: Z-65.16-524

Hygienic compatibility

FMR52 with PTFE flange cladding complies with FDA 21 CFR 177.1550 and USP <88> Class VI.

3A and EHEDG approval for versions with Tri-Clamp and DIN11851 process connections.

To avoid any risk of contamination, install the device according to the “Hygienic Equipment Design Criteria (HDC)” which was published by the Subgroup "Design Principles" of the EHEDG on April 8 2004.

Suitable fittings and seals must be used to ensure hygiene-compliant design according to the specifications of 3-A SSI and EHEDG.

The seamless connections can be cleaned of all residue using any of the typical cleaning methods within this industry.

The 316L housing (GT18), option B in order feature 40, is not suitable for use in applications which require a 3A approval.

NACE MR 0175 / ISO 15156

- The wetted, metal materials comply with the requirements of NACE MR 0175 / ISO 15156.
- Declaration of Conformity: see the product structure, feature 580, version JB

NACE MR 0103

- The wetted, metal materials comply with the requirements of NACE MR 0103.
- The Declaration of Conformity is based on NACE MR 0175.
  The hardness and intergranular corrosion have been tested, and heat treatment (solution annealed) has been performed. The materials used therefore meet the requirements of NACE MR 0103.
- Declaration of Conformity: see the product structure, feature 580, version JE.

Pressure equipment with allowable pressure ≤ 200 bar (2 900 psi)

Pressure instruments with a flange and threaded boss that do not have a pressurized housing do not fall within the scope of the Pressure Equipment Directive, irrespective of the maximum allowable pressure.

Reasons:

According to Article 2, point 5 of EU Directive 2014/68/EU, pressure accessories are defined as "devices with an operational function and having pressure-bearing housings".

If a pressure instrument does not have a pressure-bearing housing (no identifiable pressure chamber of its own), there is no pressure accessory present within the meaning of the Directive.

Marine approval

Device	Marine approval [1]				
	GL	ABS	LR	BV	DNV
FMR51	✔	✔	✔	✔	✔
FMR52	✔	✔	✔	✔	✔

1) See order code for 590 "Additional approval"

Radio standard EN 302729

The FMR51 devices with a horn antenna 100 mm / 4" and FMR52 with a flush mount horn antenna 80 mm / 3" comply with the LPR (Level Probing Radar) radio standard EN 302729. The FMR51 devices with a horn antenna 100 mm / 4" and FMR52 with a flush mount horn antenna 80 mm / 3" are approved for unrestricted use inside and outside closed vessels in countries of the EU and the EFTA. As a prerequisite, the countries in question must have already implemented this standard.

The following countries are those that have currently implemented the standard:

Belgium, Bulgaria, Germany, Denmark, Estonia, France, Greece, UK, Ireland, Iceland, Italy, Liechtenstein, Lithuania, Latvia, Malta, The Netherlands, Norway, Austria, Poland, Portugal, Romania, Sweden, Switzerland, Slovakia, Spain, Czech Republic and Cyprus.

Implementation is still underway in all of the countries not listed.

Please note the following for the operation of the devices outside of closed vessels:

1. Installation must be carried out by properly trained, expert staff.
2. The device antenna must be installed in a fixed location pointing vertically downwards.
3. The installation site must be located at a distance of 4 km from the astronomy stations listed below or otherwise approval must be provided by the relevant authority. If the device is installed at a distance of 4 to 40 km from one of the listed stations, it must not be installed at a height of more than 15 m (49 ft) above the ground.

Astronomy stations

Country	Name of the station	Latitude	Longitude
Germany	Effelsberg	50°31'32" North	06°53'00" East
Finland	Metsähovi	60°13'04" North	24°23'37" East
	Tuorla	60°24'56" North	24°26'31" East
France	Plateau de Bure	44°38'01" North	05°54'26" East
	Floirac	44°50'10" North	00°31'37" West
Great Britain	Cambridge	52°09'59" North	00°02'20" East

Country	Name of the station	Latitude	Longitude
	Damhall	53°09'22" North	02°32'03" West
	Jodrell Bank	53°14'10" North	02°18'26" West
	Knockin	52°47'24" North	02°59'45" West
	Pickmere	53°17'18" North	02°26'38" West
Italy	Medicina	44°31'14" North	11°38'49" East
	Noto	36°52'34" North	14°59'21" East
	Sardinia	39°29'50" North	09°14'40" East
Poland	Fort Skala Krakow	50°03'18" North	19°49'36" East
Russia	Dmitrov	56°26'00" North	37°27'00" East
	Kalyazin	57°13'22" North	37°54'01" East
	Pushchino	54°49'00" North	37°40'00" East
	Zelenchukskaya	43°49'53" North	41°35'32" East
Sweden	Onsala	57°23'45" North	11°55'35" East
Switzerland	Bleien	47°20'26" North	08°06'44" East
Spain	Yebes	40°31'27" North	03°05'22" West
	Robledo	40°25'38" North	04°14'57" West
Hungary	Penc	47°47'22" North	19°16'53" East

As a general rule, the requirements outlined in EN 302729 must be observed.

Radio standard EN 302372

The devices comply with the Tanks Level Probing Radar (TLPR) radio standard EN 302372 and are approved for use in closed containers. For installation, points a to f in Annex E of EN 302372 must be taken into consideration.

FCC

This device complies with Part 15 of the FCC rules. Operation is subject to the following two conditions: (1) This device may not cause harmful interference, and (2) this device must accept any interference received, including interference that may cause undesired operation.

[Any] changes or modifications not expressly approved by the party responsible for compliance could void the user's authority to operate the equipment.

The devices are compliant with the FCC Code of Federal Regulations, CFR 47, Part 15, Sections 15.205, 15.207, 15.209.

In addition, the devices FMR51 with antenna Horn 100 mm / 4" and FMR52 with antenna Horn 80 mm / 3" flush mount, are compliant with Section 15.256. For these LPR (Level Probe Radar) applications the devices must be professionally installed in a downward operating position. In addition, the devices are not allowed to be mounted in a zone of 4 km around RAS stations and within a radius of 40 km around RAS stations the maximum operation height of devices is 15 m (49 ft) above ground.

Industry Canada

Canada CNR-Gen Section 7.1.3

This device complies with Industry Canada licence-exempt RSS standard(s). Operation is subject to the following two conditions: (1) This device may not interference, and (2) this device must accept any interference, including interference that may cause undesired operation of the device.

Le présent appareil est conforme aux CNR d'Industrie Canada applicables aux appareils radio exempts de licence. L'exploitation est autorisée aux deux conditions suivantes : (1) l'appareil ne doit pas produire de brouillage, et (2) l'utilisateur de l'appareil doit accepter tout brouillage radioélectrique subi, même si le brouillage est susceptible d'en compromettre le fonctionnement.

[Any] changes or modifications not expressly approved by the party responsible for compliance could void the user's authority to operate the equipment.

- The installation of the LPR/TLPR device shall be done by trained installers, in strict compliance with the manufacturer's instructions.
- The use of this device is on a "no-interference, no-protection" basis. That is, the user shall accept operations of high-powered radar in the same frequency band which may interfere with or damage this device. However, devices found to interfere with primary licensing operations will be required to be removed at the user's expense.
- This device shall be installed and operated in a completely enclosed container to prevent RF emissions, which can otherwise interfere with aeronautical navigation.
- The installer/user of this device shall ensure that it is at least 10 km from the Dominion Astrophysical Radio Observatory (DRAO) near Penticton, British Columbia. The coordinates of the DRAO are latitude 49°19′15″ N and longitude 119°37′12″ W. For devices not meeting this 10 km separation (e.g., those in the Okanagan Valley, British Columbia,) the installer/user must coordinate with, and obtain the written concurrence of, the Director of the DRAO before the equipment can be installed or operated. The Director of the DRAO may be contacted at 250-497-2300 (tel.) or 250-497-2355 (fax). (Alternatively, the Manager, Regulatory Standards Industry Canada, may be contacted.)

- The FMR51T is a submodel of the FMR51 that fulfills the requirements for use as TLPR (Tank Level Probe Radar).
- The model FMR51L is a submodel of the FMR51. "L" indicates the unique option BD of the feature 070 ("Antenna") that fullfills the requirements for use as LPR (Level Probe Radar).
- The FMR52T is a submodel of the FMR52 that fulfills the requirements for use as TLPR (Tank Level Probe Radar).
- The model FMR52L is a submodel of the FMR52. "L" indicates the unique option BP of the feature 070 ("Antenna") that fullfills the requirements for use as LPR (Level Probe Radar).

Japanese radio approval

The devices comply with Japanese Radio Law, Article 6, Section 1(1)

CRN approval

A CRN approval is available for some device versions. Devices are CRN approved if the following two conditions are met:

- The device has a CSA approval (product structure: feature 010 "Approval")
- The device has a CRN-approved process connection as per the following table:

Feature 100 in the product structure	Process connection
AFJ	NPS 2" Cl.150 RF, 316/316L
AFK	NPS 2" Cl.150, PTFE >316/316L
AFM	NPS 2" Cl.150, AlloyC >316/316L
AGJ	NPS 3" Cl.150 RF, 316/316L
AGK	NPS 3" Cl.150, PTFE >316/316L
AGM	NPS 3" Cl.150, AlloyC >316/316L
AHJ	NPS 4" Cl.150 RF, 316/316L
AHK	NPS 4" Cl.150, PTFE >316/316L
AHM	NPS 4" Cl.150, AlloyC >316/316L
AJJ	NPS 6" Cl.150 RF, 316/316L
AJK	NPS 6" Cl.150, PTFE >316/316L
AJM	NPS 6" Cl.150, AlloyC >316/316L
AKJ	NPS 8" Cl.150 RF, 316/316L
ARJ	NPS 2" Cl.300 RF, 316/316L
ARM	NPS 2" Cl.300, AlloyC >316/316L
ASJ	NPS 3" Cl.300 RF, 316/316L
ASK	NPS 3" Cl.300, PTFE >316/316L
ASM	NPS 3" Cl.300, AlloyC >316/316L
ATJ	NPS 4" Cl.300 RF, 316/316L
ATK	NPS 4" Cl.300, PTFE>316/316L

Feature 100 in the product structure	Process connection
ATM	NPS 4" Cl.300, AlloyC >316/316L
AUJ	NPS 6" Cl.300 RF, 316/316L
AUK	NPS 6" Cl.300, PTFE>316/316L
AVJ	NPS 8" Cl.300 RF, 316/316L
MRK	DIN11851 DN50 PN25 slotted-nut, PTFE>316L
MTK	DIN11851 DN80 PN25 slotted-nut, PTFE>316L
RGJ	Thread ANSI MNPT1-1/2, 316L
RVJ	Thread EN10226 R1-1/2, 316L
TDJ	Tri-Clamp ISO2852 DN51 (2"), 316L
TDK	Tri-Clamp ISO2852 DN51 (2"), PTFE>316L, 3A, EHEDG
TFJ	Tri-Clamp ISO2852 DN70-76.1 (3"), 316L
TFK	Tri-Clamp ISO2852 DN70-76.1 (3"), PTFE>316L, 3A, EHEDG [1]
THK	Tri-Clamp ISO2852 DN101.6 (4"), PTFE>316L, 3A, EHEDG [1]

1) The CRN certificate applies in a limited pressure range; see the following table.

- Process connections that do not have CRN approval are not listed in this table.
- Please refer to the product structure to discover which process connections are available for a specific device type.
- A CRN approval is available on request for some process connections not listed in the product structure.
- CRN-approved devices are labeled with registration number OF15872.5C on the nameplate.

An additional pressure restriction applies for the device versions listed in the table below if they are CRN-approved. The pressure range indicated in the "Process" section continues to apply for device versions not listed in the table below.

Product	Antenna [1]	Process connection [2]	Seal [3]	Max. pressure
FMR52		TFK: Tri-Clamp 3"		10 bar (145 psi)
		THK: Tri-Clamp 4"		10 bar (145 psi)
FMR51			D2: graphite (HT)	100 bar (1 450 psi)

1) Feature 070 in the product structure
2) Feature 100 in the product structure
3) Feature 090 in the product structure

Test, certificate

Feature 580 "Test, certificate"	Designation
JA	3.1 Material documentation, wetted metal parts, EN10204-3.1 inspection certificate
JB	Conformity to NACE MR0175, wetted metallic parts
JD	3.1 Material certificate, pressurized parts, EN10204-3.1 inspection certificate
JE	Conformity to NACE MR0103, wetted metallic parts
JF	Declaration of Conformity AD2000, wetted metal parts: Material conformity for all metal wetted/pressurized parts according to AD2000 (data sheets W2, W9, W10)
KD	Helium leak test, internal procedure, inspection certificate
KE	Pressure test, internal procedure, inspection certificate
KG	3.1 Material certificate+PMI test (XRF), internal procedure, wetted metallic parts, EN10204-3.1 inspection certificate
KP	Penetrant testing AD2000-HP5-3(PT), wetted/pressurized metal parts, inspection certificate
KQ	Penetrant testing ISO23277-1 (PT), wetted/pressurized metal parts, inspection certificate
KR	Penetrant testing ASME VIII-1 (PT), wetted/pressurized metal parts, inspection certificate
KS	Welding documentation, wetted/pressurized seams Consists of: ▪ Drawing ▪ WPQR (Welding Procedure Qualification Report) ▪ WPS (Welding Process Specification) ▪ Manufacturer's Declaration
KV	Declaration of Conformity ASME B31.3: The construction, the material used, the pressure and temperature ranges and the labeling of the devices meet the requirements of ASME B31.3

Test reports, declarations and inspection certificates are available in electronic format in the *W@M Device Viewer*:
Enter the serial number that appears on the device (www.endress.com/deviceviewer)

This concerns the options for the following order codes:
- 550 "Calibration"
- 580 "Test, certificate"
- 590 "Additional approval", option LW: "CoC-ASME BPE"

Hard-copy product documentation

Hard-copy versions of the test reports, declarations and inspection certificates can also be order via order code 570 "Service", option I7 "Hard-copy product documentation". The documents are then supplied with the product.

Other standards and guidelines

- EN 60529
  Degrees of protection provided by enclosures (IP code)
- EN 61010-1
  Safety Requirements for Electrical Equipment for Measurement, Control and Laboratory Use
- IEC/EN 61326
  "Emission in accordance with Class A requirements". Electromagnetic compatibility (EMC requirements).
- NAMUR NE 21
  Electromagnetic compatibility (EMC) of industrial process and laboratory control equipment
- NAMUR NE 43
  Standardization of the signal level for the breakdown information of digital transmitters with analog output signal.
- NAMUR NE 53
  Software of field devices and signal-processing devices with digital electronics
- NAMUR NE 107
  Status classification as per NE107
- NAMUR NE 131
  Requirements for field devices for standard applications.
- IEC61508
  Functional safety of safety-related electric/electronic/programmable electronic systems

Ordering information

Ordering information

Detailed ordering information is available for your nearest sales organization www.addresses.endress.com or in the Product Configurator under www.endress.com :

1. Click Corporate
2. Select the country
3. Click Products
4. Select the product using the filters and search field
5. Open the product page

The Configuration button to the right of the product image opens the Product Configurator.

Product Configurator - the tool for individual product configuration
- Up-to-the-minute configuration data
- Depending on the device: Direct input of measuring point-specific information such as measuring range or operating language
- Automatic verification of exclusion criteria
- Automatic creation of the order code and its breakdown in PDF or Excel output format
- Ability to order directly in the Endress+Hauser Online Shop

3-point linearity protocol

The following points must be considered if option F3 (3-point linearity protocol) was selected in feature 550 ("Calibration").

The 3 points of the linearity protocol are defined as follows:

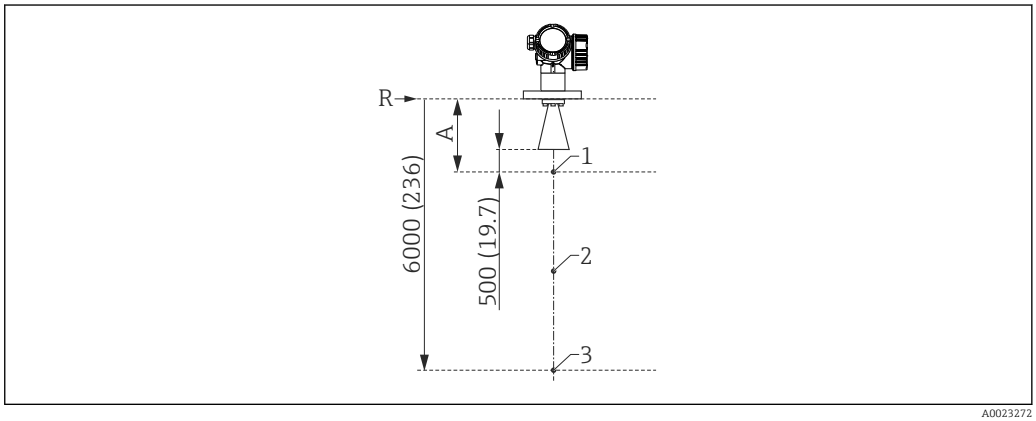

48 *Points of the 3-point linearity protocol; engineering unit: mm (in)*

A Distance from the reference point R to the first measuring point
R Reference point of measurement
1 First measuring point
2 Second measuring point (in the middle between the first and third measuring point)
3 Third measuring point

Measuring point	Item
1st measuring point	▪ At a distance A from the reference point ▪ A = length of antenna + antenna extension where applicable + 500 mm (19.7 in) ▪ Minimum distance: A_{min} = 1000 mm (39.4 in)
2nd measuring point	In the middle between the 1st and 3rd measuring point
3rd measuring point	6000 mm (236 in) below the reference point R

The position of the measuring points can vary by ±1 cm (±0.04 in).

The linearity check is performed under reference operating conditions.

5-point linearity protocol

The following points must be considered if option F4 (5-point linearity protocol) was selected in feature 550 ("Calibration").

The 5 points of the linearity protocol are evenly distributed over the measuring range (0% - 100%). **Empty calibration** (E) and **Full calibration** (F) must be specified in order to define the measuring range [2].

The following restrictions must be considered when selecting E and F:

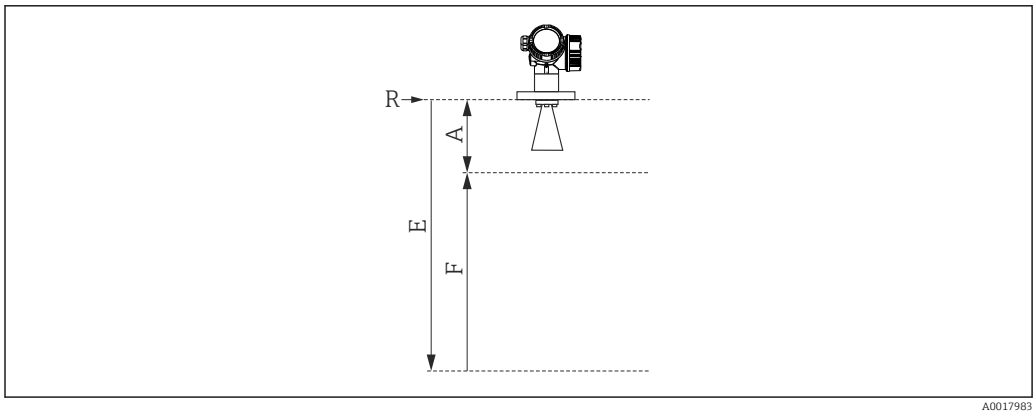

A0017983

Version	Minimum distance between reference point R and 100% mark	Minimum span	Maximum value for "Empty calibration"
FMR50/FMR51 Without antenna extension	A ≥ length of antenna + 200 mm (8 in) [1]	F ≥ 400 mm (16 in)	E ≤ 24 m (79 ft)
FMR51 with 100 mm antenna extension [2]	A ≥ length of antenna + antenna extension 100 mm (4 in) + 200 mm (8 in) [1]		
FMR51 with variable antenna extension [3]	A ≥ length of antenna + maximum antenna extension 1 000 mm (40 in) [4] + 200 mm (8 in)		

1) Minimum value: A ≥ 400 mm (16 in)
2) Feature 610 "Accessory mounted" option OM
3) Feature 610 "Accessory mounted" option OU or OV
4) This value applies irrespective of the actual size of the antenna extension.

The linearity check is performed under reference operating conditions.

The selected values for **Empty calibration** and **Full calibration** are only used to create the linearity protocol. Afterwards, the values are reset to the default values specific for the antenna. If values other than the default values are required, they must be ordered as a customized parameterization.

2) If (E) and (F) are not specified, antenna-dependent default values will be used instead.

Customer-specific configuration

If the option IJ: "Customized parameterization HART", IK "Customized parameterization PA" or IL "Customized parameterization FF" has been selected in feature 570 "Service", presettings that differ from the default settings can be selected for the following parameters:

Parameters	Communication protocol	Picklist / range of values
Setup → Unit of length	▪ HART ▪ PA ▪ FF	▪ in ▪ ft ▪ mm ▪ m
Setup → Empty calibration	▪ HART ▪ PA ▪ FF	max. 70 m (230 ft)
Setup → Full calibration	▪ HART ▪ PA ▪ FF	max. < 70 m (230 ft)
Setup → Extended setup → Curr. output 1/2 → Damping	HART	0 to 999.9 s
Setup → Extended setup → Curr. output 1/2 → Failure mode	HART	▪ Min ▪ Max ▪ Last valid value
Expert → Comm. → HART config. → Burst mode	HART	▪ Off ▪ On

Tagging (TAG)

Ordering feature	895: Marking
Option	Z1: Tagging (TAG), see additional spec.
Position of the measuring point marking	To be selected in the additional specifications: ▪ Tag plate Stainless Steel ▪ Self-adhesive paper label ▪ Supplied label/plate ▪ RFID TAG ▪ RFID TAG + Tag plate Stainless Steel ▪ RFID TAG + Self-adhesive paper label ▪ RFID TAG + Supplied label/plate
Definition of the measuring point designation	To be defined in the additional specifications: 3 lines containing up to 18 characters each The measuring point designation appears on the selected label and/or the RFID TAG.
Designation in the Electronic Name Plate (ENP)	The first 32 characters of the measuring point designation
Designation on the display module	The first 12 characters of the measuring point designation

Services

The following services can be selected via the product structure in the Product Configurator:
- PWIS-free (PWIS = paint-wetting impairment substances)
- Customized parameterization HART
- Customized parameterization PA
- Customized parameterization FF
- W/o tooling DVD (FieldCare)
- Hard-copy product documentation

Application packages

Heartbeat Diagnostics

Availability

Available in all device versions.

Function

- Continuous self-monitoring of the device.
- Diagnostic messages output to
  - the local display.
  - an asset management system (e.g. FieldCare/DeviceCare).
  - an automation system (e.g. PLC).

Advantages

- Device condition information is available immediately and processed in time.
- The status signals are classified in accordance with VDI/VDE 2650 and NAMUR recommendation NE 107 and contain information about the cause of the error and remedial action.

Detailed description

See the "Diagnostics and troubleshooting" section of the Operating Instructions for the device.

Heartbeat Verification

Availability

Available for the following versions of feature 540 "Application package":
- EH: Heartbeat Verification + Monitoring
- EJ: Heartbeat Verification

Device functionality checked on demand

- Verification of the correct functioning of the measuring device within specifications.
- The verification result provides information about the condition of the device: **Passed** or **Failed**.
- The results are documented in a verification report.
- The automatically generated report supports the obligation to demonstrate compliance with internal and external regulations, laws and standards.
- Verification is possible without interrupting the process.

Advantages

- No onsite presence is required to use the function.
- The DTM [3] triggers verification in the device and interprets the results. No specific knowledge is required on the part of the user.
- The verification report can be used to prove quality measures to a third party.
- **Heartbeat Verification** can replace other maintenance tasks (e.g. periodic check) or extend the test intervals.

SIL/WHG-locked devices [4]

- The **Heartbeat Verification** module contains a wizard for the proof test which must be performed at appropriate intervals for the following applications:
  - SIL (IEC61508/IEC61511)
  - WHG (German Water Resources Act)
- To perform a proof test, the device must be locked (SIL/WHG locking).
- The wizard can be used via FieldCare, DeviceCare or a DTM-based process control system.

In the case of SIL-locked and WHG-locked devices, it is **not** possible to perform verification without taking additional measures (e.g. bridging the output current) because the output current must be simulated (Increased safety mode) or the level must be approached manually (Expert mode) during subsequent re-locking (SIL/WHG locking).

Detailed description

SD01871F

3) DTM: Device Type Manager; controls device operation via DeviceCare, FieldCare or a DTM-based process control system.
4) Only relevant for devices with SIL or WHG approval: order code 590 ("Additional approval"), option LA ("SIL") or LC ("WHG").

Heartbeat Monitoring

Availability

Available for the following versions of feature 540 "Application package":
EH: Heartbeat Verification + Monitoring

Function

- In addition to the verification parameters, the corresponding parameter values are also logged.
- Existing measured variables, such as the echo amplitude, are used in the **Foam detection** and **Build-up detection** wizards.

In the Micropilot FMR6x, the **Foam detection** and **Build-up detection** wizards cannot be used together.

"Foam detection" wizard

- The Heartbeat Monitoring module contains the **Foam detection** wizard.
- This wizard is used to configure automatic foam detection, which detects foam on the product surface on the basis of the reduced signal amplitude. Foam detection can be linked to a switch output in order to control a sprinkler system, for example, which dissolves the foam.
- This wizard can be used via FieldCare, DeviceCare or a DTM-based process control system.

"Build-up detection" wizard

- The Heartbeat Monitoring module contains the **Build-up detection** wizard.
- The wizard is used to configure automatic buildup detection, which detects the buildup of deposits on the antenna on the basis of the increased area of the coupling signal. Buildup detection can be linked to a switch output in order to control a compressed air system, for example, to clean the antenna.
- This wizard can be used via FieldCare, DeviceCare or a DTM-based process control system.

Advantages

- Early detection of changes (trends) to ensure plant availability and product quality.
- Use of information for the proactive planning of measures (e.g. cleaning/maintenance).
- Identification of undesirable process conditions as the basis to optimizing the facility and the processes.
- Automated control of measures to remove foam or buildup.

Detailed description

SD01871F

Accessories

Device-specific accessories **Weather protection cover**

Accessory	Description
Weather protection cover	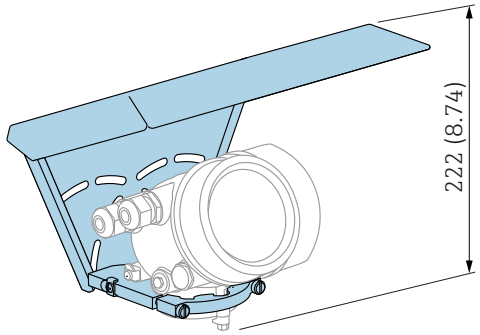 A0015466 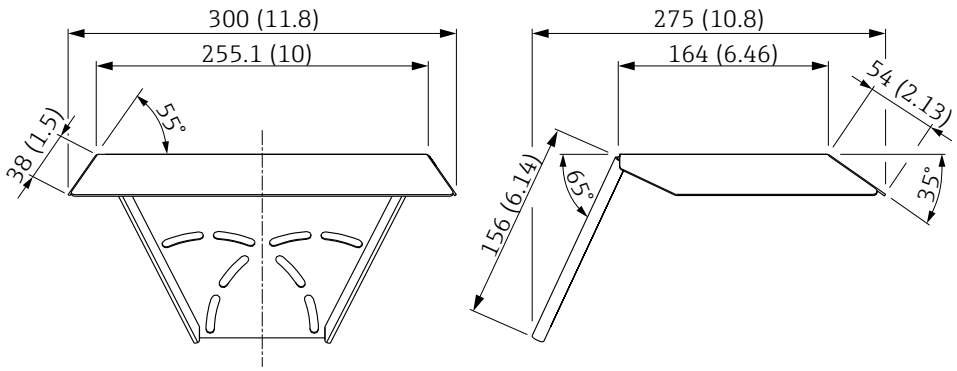 A0015472 *49 Weather protection cover; Dimensions: mm (in)* The weather protection cover can be ordered together with the device (product structure, feature 620 "Accessory Enclosed", option PB "Weather Protection Cover"). Alternatively, it can be separately ordered as an accessory; order code 71162242.

Remote display FHX50

Accessories	Description
Remote display FHX50	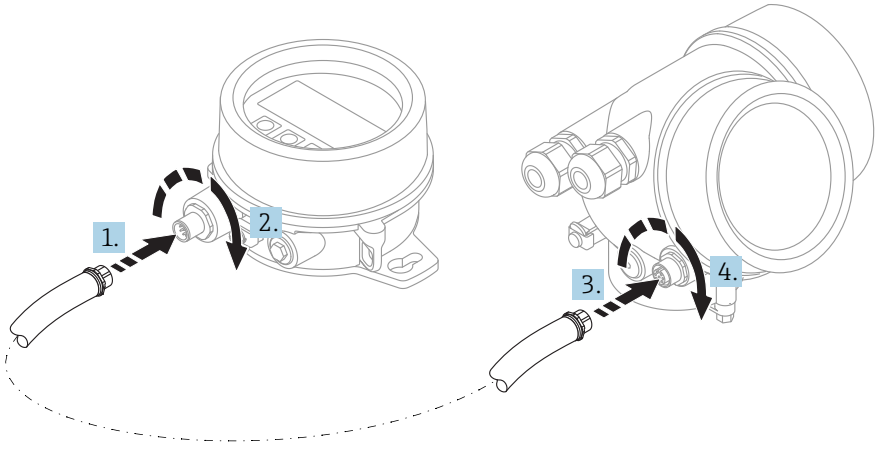 A0019128 ▪ Material: ▪ Plastic PBT ▪ 316L/1.4404 ▪ Aluminum ▪ Degree of protection: IP68 / NEMA 6P and IP66 / NEMA 4x ▪ Suitable for display modules: ▪ SD02 (push buttons) ▪ SD03 (touch control) ▪ Connecting cable: ▪ Cable supplied with device up to 30 m (98 ft) ▪ Standard cable supplied by customer up to 60 m (196 ft) ▪ Ambient temperature range: −40 to 80 °C (−40 to 176 °F) ▪ Ambient temperature range (option): −50 to 80 °C (−58 to 176 °F) [1] ▪ If the remote display should be used, order the device version "Prepared for display FHX50" (feature 030, version L, M or N). For the FHX50, you must select option A: "Prepared for display FHX50" under feature 050 "Measuring device version". ▪ If the device version "Prepared for display FHX50" was not originally ordered and a FHX50 display is to be retrofitted, you must select version B "Not prepared for display FHX50" under feature 050: "Measuring device version" when ordering the FHX50. In this case, a retrofit kit for the device is supplied with the FHX50. The kit can be used to prepare the device so that the FHX50 can be used. Use of the FHX50 may be restricted for transmitters with an approval. A device can only be retrofitted with the FHX50 if the option L, M or N ("Prepared for FHX50") is listed under *Basic specifications*, item 4 "Display, operation" in the Safety Instructions (XA) for the device. Also pay attention to the Safety Instructions (XA) of the FHX50. Retrofitting is not possible on transmitters with: ▪ An approval for use in areas with flammable dust (dust ignition-proof approval) ▪ Ex nA type of protection For details, see document SD01007F.

1) This range is valid if option JN "Ambient temperature transmitter −50 °C (−58 °F)" has been selected in ordering feature 580 "Test, Certificate". If the temperature is permanently below −40 °C (−40 °F), failure rates may be increased.

Horn protection for horn antenna

This section does **not** apply for the following options of order code 610 "Accessory mounted".
- OU: ...mm antenna extension
- OV: ... inch antenna extension

For such cases, use the horn protection for the horn antenna with a variable antenna extension.

Accessories	Description
Horn protection for horn antenna 80 mm (3 in) or 100 mm (4 in)	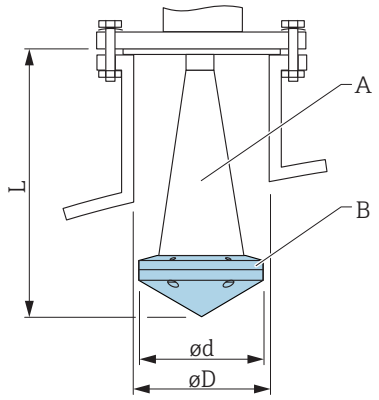 A0019143 *A Horn antenna of the Micropilot (not included in the delivery of the horn protection)* *B Horn protection* *Ød Diameter of horn protection (see table below)* *ØD Minimum nozzle diameter (see table below)* *L Length of antenna with horn protection (see table below)* For details, see the Installation Instructions SD01084F. **Process conditions** ▪ Maximum vessel pressure: 0.5 bar (7.252 psi) ▪ Maximum process temperature: 130 °C (266 °F) Explosion Hazard Avoid electrostatic charge of the horn protection.

Horn protection for FMR51

Antenna [1]	Order number for horn protection	Dimensions of antenna + horn protection		
		L [2]	Ød	ØD
BC: horn 80mm/3"	71105890	238 mm (9.4 in)	96 mm (3.78 in)	≥ DN100
BD: horn 100mm/4"	71105889	302 mm (11.9 in)	116 mm (4.57 in)	≥ DN150

1) Feature 070 in the product structure
2) A different length applies for antennas with a variable antenna extension (order code 610, option OU or OV)

The horn protection can also be ordered together with the device. Product structure: feature 610 "Accessory mounted", option OW "Horn protection, PTFE".

Horn protection for horn antenna with variable antenna extension

This section applies for the following options of order code 610 "Accessory mounted":
- OU: ...mm antenna extension
- OV: ... inch antenna extension

Accessories	Description
Horn protection for horn antenna 80 mm (3 in) or 100 mm (4 in)	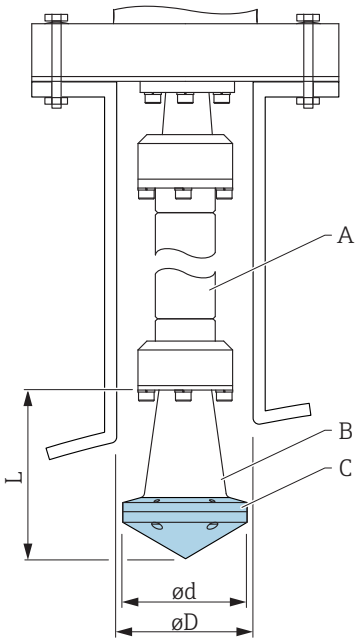 A0027190 *A Antenna extension (not included in the delivery of the horn protection)* *B Horn antenna of the Micropilot (not included in the delivery of the horn protection)* *C Horn protection* *Ød Diameter of horn protection (see table below)* *ØD Minimum nozzle diameter (see table below)* *L Length of antenna with horn protection (see table below)*

Horn protection for FMR51 with variable antenna extension

Antenna [1]	Order number for horn protection	Dimensions of antenna + horn protection		
		L	Ød	ØD
BC: horn 80mm/3"	71105890	203 mm (8 in)	96 mm (3.78 in)	≥ DN100
BD: horn 100mm/4"	71105889	267 mm (10.5 in)	116 mm (4.57 in)	≥ DN150

1) Feature 070 in the product structure

Overvoltage protection

Accessory	Description
Overvoltage protection for 2-wire-devices OVP10 (1 channel) OVP20 (2 channel)	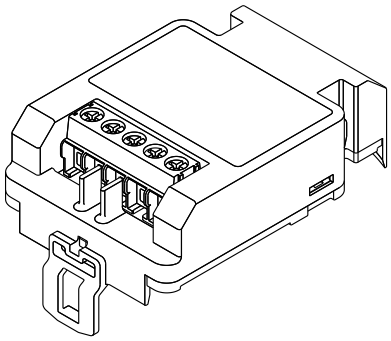 A0021734 **Technical data** ▪ Resistance per channel: 2 * 0.5 Ω_{max} ▪ Threshold DC voltage: 400 to 700 V ▪ Threshold impulse voltage: < 800 V ▪ Capacitance at 1 MHz: < 1.5 pF ▪ Nominal arrest impulse voltage (8/20 µs): 10 kA ▪ Suited for wire cross-sections: 0.2 to 2.5 mm² (24 to 14 AWG) **Ordering with device** The overvoltage protection module is preferably ordered with the device. See product structure, feature 610 "Accessory mounted", option NA "Overvoltage protection". Separate ordering of the module is only necessary if a device is to retrofitted with the overvoltage protection. **Order code for retrofitting** ▪ For 1-channel devices (feature 020, option A) OVP10: 71128617 ▪ For 2-channel devices (feature 020, option B, C, E or G) OVP20 : 71128619 **Hosuing lid for retrofitting** In order to keep the necessary safety distances, the housing lid needs to be replaced if the device is retrofitted with the overvoltage protection. Depending on the housing type, the order code of the suitable lid is as follows: ▪ GT18 housing: Lid 71185516 ▪ GT19 housing: Lid 71185518 ▪ GT20 housing: Lid 71185516 **Restrictions for retrofitting** Depending on the approval of the transmitter the usage of the OVP module may be restricted. A device may only be retrofitted with an OVP module if the option *NA* (overvoltage protection) is quoted unter *Optional Specifications* in the Safety Instructions (XA) pertaining to the device. For details refer to SD01090F.

Gas-tight feedthrough

Chemically inert glass feedthrough; prevents gases from entering the electronics housing

To order with the device: product structure, feature 610 "Accessory mounted", option NC "Gas-tight feedthrough"

Bluetooth module for HART devices

Accessory	Description
Bluetooth module	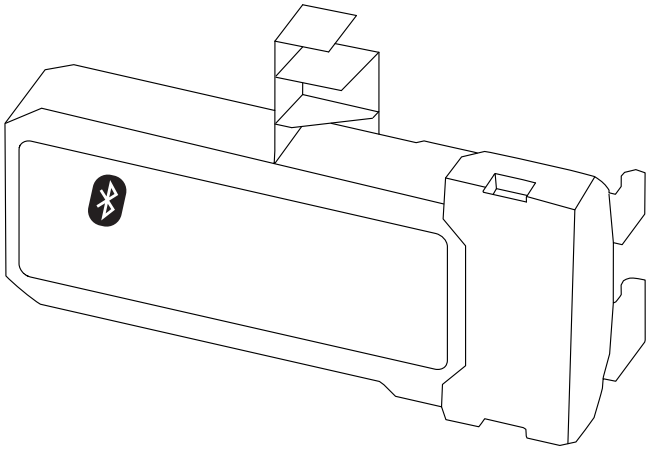 A0036493 ▪ Quick and easy commissioning via SmartBlue (app) ▪ No additional tools or adapters required ▪ Signal curve via SmartBlue (app) ▪ Encrypted single point-to-point data transmission (tested by Fraunhofer institue) and password protected communication via Bluetooth® wireless technology ▪ Range under reference conditions: > 10 m (33 ft) When using the Bluetooth module the minimum supply voltage increases by up to 3 V. **Ordering with device** The Bluetooth module is preferably ordered with the device. See product structure, feature 610 "Accessory Mounted", option NF "Bluetooth". A separate order is only necessary in case of retrofitting. **Order code for retrofitting** Bluetooth module (BT10): 71377355 **Restrictions in case of retrofitting** Depending on the approval of the transmitter, application of the Bluetooth module may be restricted. A device may only be retrofitted with a Bluetooth module if the option *NF* (Bluetooth) is listed in the associated Safety Instructions (XA) under *Optional specifications*. For details refer to SD02252F.

Communication-specific accessories

Commubox FXA195 HART
For intrinsically safe HART communication with FieldCare via the USB interface

For details, see "Technical Information" TI00404F

Commubox FXA291
Connects Endress+Hauser field devices with a CDI interface (= Endress+Hauser Common Data Interface) and the USB port of a computer or laptop
Order number: 51516983

For details, see "Technical Information" TI00405C

HART Loop Converter HMX50
Is used to evaluate and convert dynamic HART process variables to analog current signals or limit values
Order number: 71063562

For details, see "Technical Information" TI00429F and Operating Instructions BA00371F

WirelessHART adapter SWA70
- Is used for the wireless connection of field devices
- The WirelessHART adapter can be easily integrated into field devices and existing infrastructures, offers data protection and transmission safety and can be operated in parallel with other wireless networks

For details, see Operating Instructions BA00061S

Connect Sensor FXA30/FXA30B
Fully integrated, battery-powered gateway for simple applications with SupplyCare Hosting. Up to 4 field devices with 4 to 20 mA communication (FXA30/FXA30B), serial Modbus (FXA30B) or HART (FXA30B) can be connected. With its robust design and ability to run for years on the battery, it is ideal for remote monitoring in isolated locations. Version with LTE (USA, Canada and Mexico only) or 3G mobile transmission for worldwide communication.

For details, see "Technical Information" TI01356S and Operating Instructions BA01710S.

Fieldgate FXA42
Fieldgates enable communication between connected 4 to 20 mA, Modbus RS485 and Modbus TCP devices and SupplyCare Hosting or SupplyCare Enterprise. The signals are transmitted either via Ethernet TCP/IP, WLAN or mobile communications (UMTS). Advanced automation capabilities are available, such as an integrated Web-PLC, OpenVPN and other functions.

For details, see "Technical Information" TI01297S and Operating Instructions BA01778S.

SupplyCare Enterprise SCE30B
Inventory management software that displays the level, volume, mass, temperature, pressure, density or other parameters of tanks. The parameters are recorded and transmitted by means of gateways like Fieldgate FXA42, Connect Sensor FXA30B or other gateway types.
This Web-based software is installed on a local server and can also be visualized and operated with mobile terminals such as a smartphone or tablet.

For details, see Technical Information TI01228S and Operating Instructions BA00055S

SupplyCare Hosting SCH30
Inventory management software that displays the level, volume, mass, temperature, pressure, density or other parameters of tanks. The parameters are recorded and transmitted by means of gateways like Fieldgate FXA42, Connect Sensor FXA30B or other gateway types.
SupplyCare Hosting is offered as a hosting service (Software as a Service, SaaS). In the Endress +Hauser portal, the user is provided with the data over the Internet.

For details, see Technical Information TI01229S and Operating Instructions BA00050S

Field Xpert SFX350
Field Xpert SFX350 is a mobile computer for commissioning and maintenance. It enables efficient device configuration and diagnostics for HART and FOUNDATION Fieldbus devices in the **non-Ex area**.

For details, see Operating Instructions BA01202S

Field Xpert SFX370
Field Xpert SFX370 is a mobile computer for commissioning and maintenance. It enables efficient device configuration and diagnostics for HART and FOUNDATION Fieldbus devices in the **non-Ex area** and the **Ex area**.

For details, see Operating Instructions BA01202S

Service-specific accessories

DeviceCare SFE100
Configuration tool for HART, PROFIBUS and FOUNDATION Fieldbus field devices

Technical Information TI01134S

FieldCare SFE500
FDT-based plant asset management tool
It can configure all smart field units in your system and helps you manage them. By using the status information, it is also a simple but effective way of checking their status and condition.

Technical Information TI00028S

System components

Memograph M graphic data manager
The Memograph M graphic data manager provides information on all the relevant process variables. Measured values are recorded correctly, limit values are monitored and measuring points analyzed. The data are stored in the 256 MB internal memory and also on a SD card or USB stick.

Technical Information TI00133R and Operating Instructions BA00247R

RN221N
Active barrier with power supply for safe separation of 4 to 20 mA standard signal circuits. Offers bidirectional HART transmission.

Technical Information TI00073R and Operating Instructions BA00202R

RN221
Supply unit for powering two 2-wire measuring devices solely in the non-Ex area. Bidirectional communication is possible via the HART communication jacks.

Technical Information TI00081R and Brief Operating Instructions KA00110R

Supplementary documentation

The following documentation types are available in the Downloads section of the Endress+Hauser website (www.endress.com/downloads):

For an overview of the scope of the associated Technical Documentation, refer to the following:
- *W@M Device Viewer* (www.endress.com/deviceviewer): Enter the serial number from nameplate
- *Endress+Hauser Operations App*: Enter the serial number from the nameplate or scan the 2D matrix code (QR code) on the nameplate

Brief Operating Instructions (KA)

Guide that takes you quickly to the 1st measured value
The Brief Operating Instructions contain all the essential information from incoming acceptance to initial commissioning.

Operating Instructions (BA)

Your reference guide
These Operating Instructions contain all the information that is required in various phases of the life cycle of the device: from product identification, incoming acceptance and storage, to mounting, connection, operation and commissioning through to troubleshooting, maintenance and disposal.

Safety Instructions (XA)

Depending on the approval, the following Safety Instructions (XA) are supplied with the device. They are an integral part of the Operating Instructions.

The nameplate indicates the Safety Instructions (XA) that are relevant to the device.



www.addresses.endress.com

Endress+Hauser

People for Process Automation