HK 4020

Dimensions

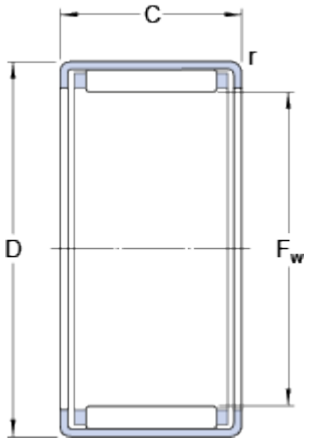

F_w		40	mm
D		47	mm
C		20	mm
r	min.	0.8	mm

Calculation data

Basic dynamic load rating	C	24.2	kN
Basic static load rating	C_0	53	kN
Fatigue load limit	P_u	6.4	kN
Reference speed		6300	r/min
Limiting speed		7000	r/min

Mass

Mass bearing	0.054	kg

Appropriate products

Inner ring IR series	IR 35x40x20.5
Inner ring LR series	LR 35x40x20.5
Radial shaft seal with a low cross-sectional height, single lip	G 40x47x4
Radial shaft seal with a low cross-sectional height, double lip	SD 40x47x4