MICON 5, SMT low, 5.5 ± 1.1 N, 1 NO



fields of application

- Measurement-control-regulation
- Mechanical and system engineering
- Automotive
- Electro-medical

special features

- Gold contacts, reliable switching with low currents
- Special tactile feedback
- High packing density due to small form factor (5.1 x 6.4 mm)
- Different operating forces
- Ring and full illumination of the button surface due to plunger
- Variable overall heights due to plunger
- Terminal technology: SMT
- Traceability through product identification in accordance with DIN EN ISO 9001

CE

description

MICON 5 tactile switches offer extreme switching reliability, with a very small space requirement. They can be arranged individually, in rows or as key blocks. For use beneath overlays, we recommend combining the MICON 5 tactile switches with plungers. Here are the properties at a glance:

- Suitable for the most important soldering techniques
- Soldering bath for THT versions
- Reflow soldering for SMT versions
- Vapor phase soldering for SMT versions
- Manual soldering
- Processing of the SMT design with SMT automatic assembly machines
- IMDS entry

MICON 5, SMT nieder mit einer Bauhöhe von nur 3,45 mm Verarbeitungshinweis: Sonderpipette (Siemens Siplace Best.-Nr. 348514-02) Bestückung mit Revolverkopf. Vorschlag für Schablonendruck: 150 ?m-Schablone mit 10% Pad-Verkleinerung auf Fläche

technical data

general

Operating temperature, min.	-40 °C
Operating temperature, max.	90 °C
Storage temperature, min.	-40 °C
Storage temperature, max.	90 °C
illuminated	No
Soldering	Reflow

direct links

- RAFI eCatalog

The information in this data sheet only contains general descriptions and / or performance features, which may not apply precisely as described to the respective application, and which my change due to further product enhancements. The technical data, illustrations and other information about our products are the mere results of individual technical testing. These descriptions and other product features are only binding if they expressly agreed upon at the time of the conclusion of a binding contract. In all other cases, we reserve the right to make technical changes as well as changes of availability. Pictures and other graphic illustrations are approximations only. All product names may be trademarks or brand names of the RAFI Group or any other sub-supplier of RAFI. The use of such by any third parties for their own purposes may infringe the rights of the respective entity holding those rights.

RAFI GmbH & Co. KG

Ravensburger Str. 128-134
88276 Berg / Ravensburg
Germany
www.rafi-group.com,
info.headquarters@rafi-group.com

Solder heat resistance according	DIN EN 60068-2-58
to standard	DIN EN 61760-1
Packaging	Blister
Packaging unit	2,100 pcs.
net weight	0.3 g
Operating life	1,000,000 cycles
B10	1,300,000 cycles
MSL Moisture Sensitivity Level	1
Shock resistance according to standard IEC 60068-2-27	100 g at 6 ms amplitude semi-sinusoidal
oscillation restistance according to standard IEC 60068-2-6	5 g at 10...500 Hz
MOQ order	2,100 pcs.
RoHS compliant	Yes
REACH compliant	Yes

mounting diameters

Outside dimension, length	6.4 ± 0.1 mm
Outside dimension, width	5.1 ± 0.1 mm
Installation height	3.45 ± 0.1 mm
Grid, min.	6 x 7.8 mm

mechanical data

Actuation function	momentary contact function
Operating force, max.	8 N
Operating force, min.	5.5 ± 1.1 N
Switching travel	0.7 ± 0.15 mm
Contact function	1 NO
Contact system	Snap-action contact SPST - Single Pole Single Throw
Contact material	Gold
Solderability	Yes
Terminal on the rear	SMT

electrical data

Rated voltage, min.	0.02 V
Rated voltage, max.	35 V
Dielectric strength	250 V
Rated current, min.	0.00001 A
Rated current, max.	0.1 A
Rated power, max.	1 W

The information in this data sheet only contains general descriptions and / or performance features, which may not apply precisely as described to the respective application, and which my change due to further product enhancements. The technical data, illustrations and other information about our products are the mere results of individual technical testing. These descriptions and other product features are only binding if they expressly agreed upon at the time of the conclusion of a binding contract. In all other cases, we reserve the right to make technical changes as well as changes of availability. Pictures and other graphic illustrations are approximations only. All product names may be trademarks or brand names of the RAFI Group or any other sub-supplier of RAFI. The use of such by any third parties for their own purposes may infringe the rights of the respective entity holding those rights.

RAFI GmbH & Co. KG

Ravensburger Str. 128-134
88276 Berg / Ravensburg
Germany
www.rafi-group.com,
info.headquarters@rafi-group.com

drawings

Dimensioned drawing

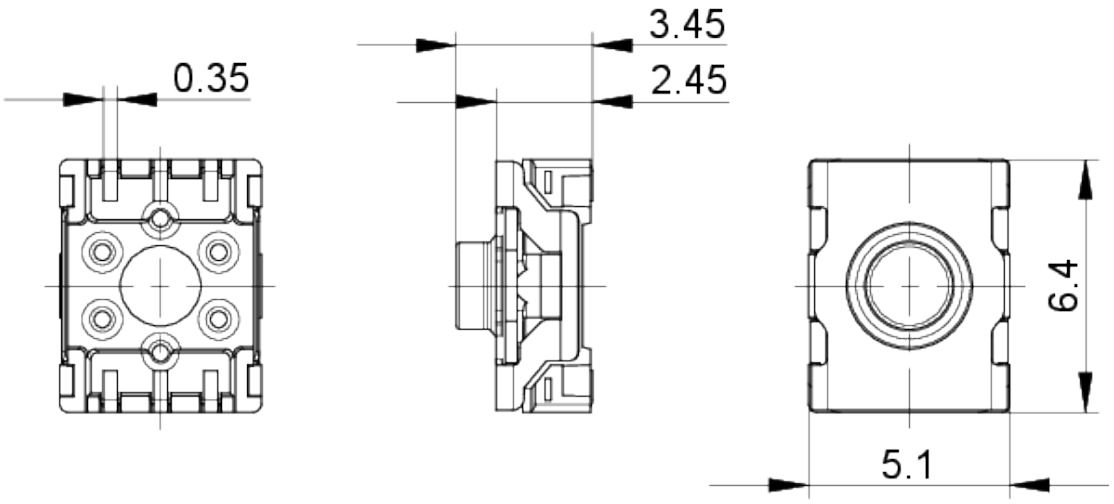

System drawing

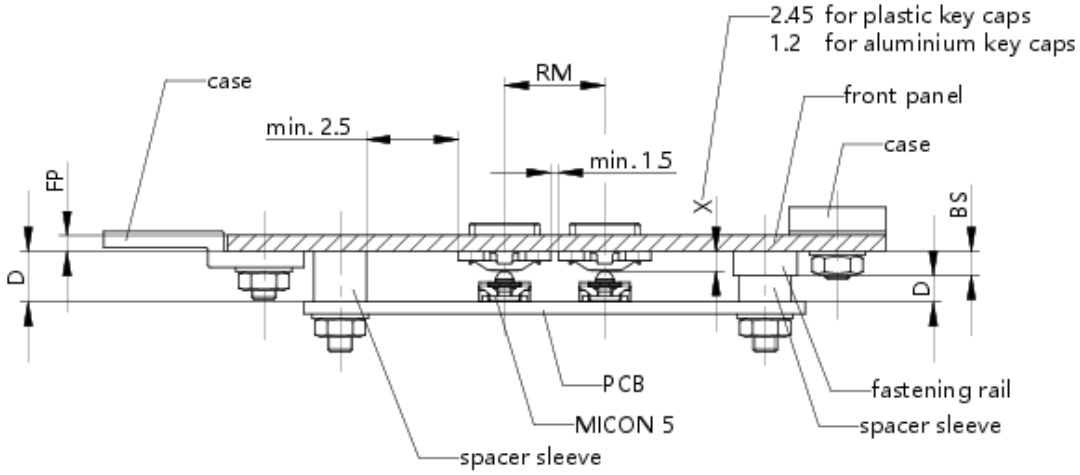

The information in this data sheet only contains general descriptions and / or performance features, which may not apply precisely as described to the respective application, and which my change due to further product enhancements. The technical data, illustrations and other information about our products are the mere results of individual technical testing. These descriptions and other product features are only binding if they expressly agreed upon at the time of the conclusion of a binding contract. In all other cases, we reserve the right to make technical changes as well as changes of availability. Pictures and other graphic illustrations are approximations only. All product names may be trademarks or brand names of the RAFI Group or any other sub-supplier of RAFI. The use of such by any third parties for their own purposes may infringe the rights of the respective entity holding those rights.

RAFI GmbH & Co. KG

Ravensburger Str. 128-134
88276 Berg / Ravensburg
Germany
www.rafi-group.com,
info.headquarters@rafi-group.com

PCB drawing

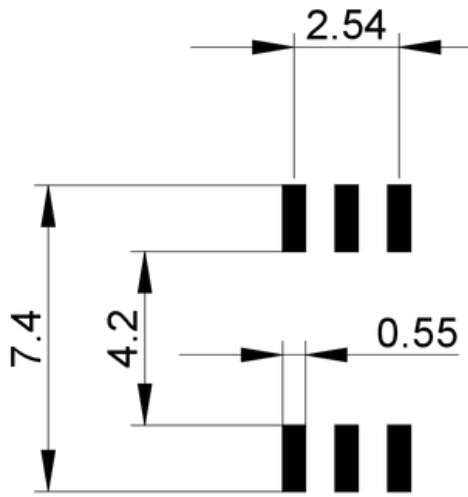

PCB drawing

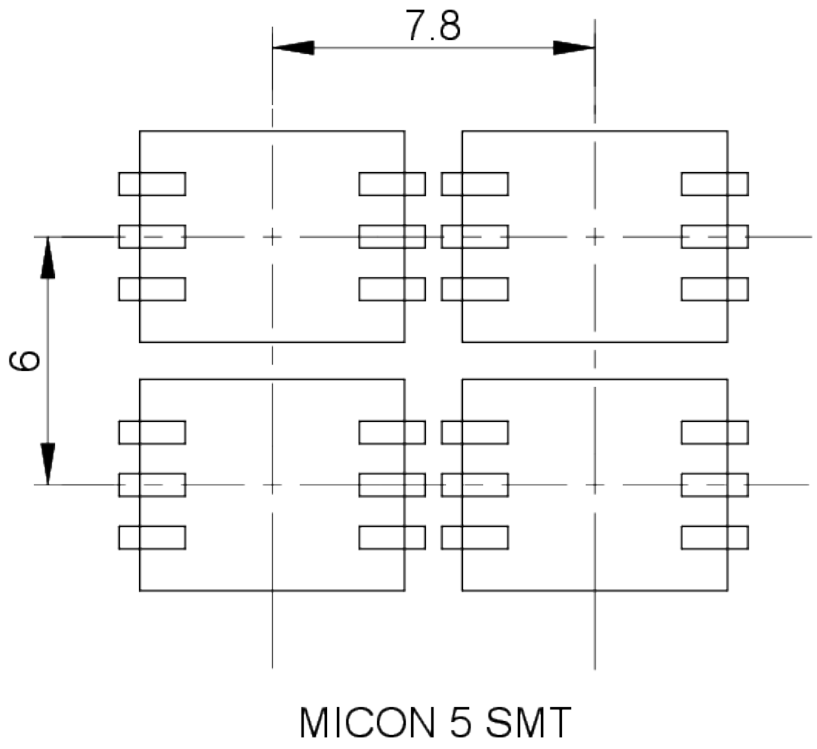

The information in this data sheet only contains general descriptions and / or performance features, which may not apply precisely as described to the respective application, and which my change due to further product enhancements. The technical data, illustrations and other information about our products are the mere results of individual technical testing. These descriptions and other product features are only binding if they expressly agreed upon at the time of the conclusion of a binding contract. In all other cases, we reserve the right to make technical changes as well as changes of availability. Pictures and other graphic illustrations are approximations only. All product names may be trademarks or brand names of the RAFI Group or any other sub-supplier of RAFI. The use of such by any third parties for their own purposes may infringe the rights of the respective entity holding those rights.

RAFI GmbH & Co. KG

Ravensburger Str. 128-134
88276 Berg / Ravensburg
Germany
www.rafi-group.com,
info.headquarters@rafi-group.com

Schematic diagram

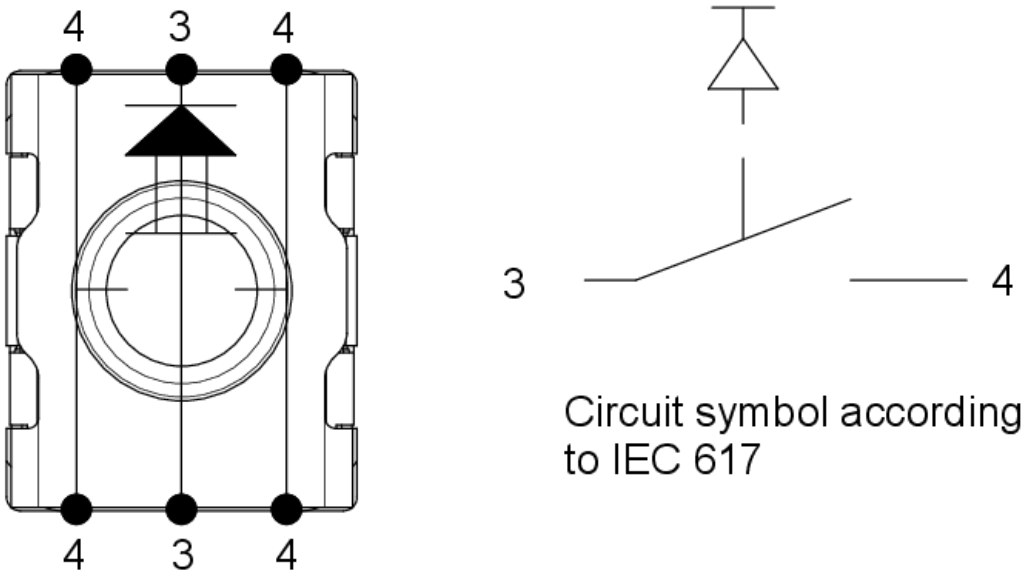

Product labeling drawing

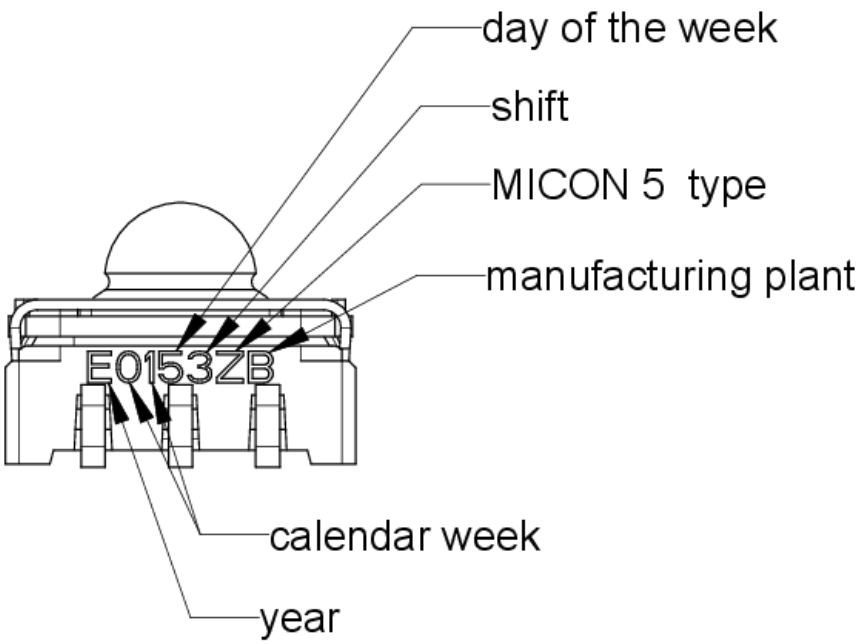

The information in this data sheet only contains general descriptions and / or performance features, which may not apply precisely as described to the respective application, and which my change due to further product enhancements. The technical data, illustrations and other information about our products are the mere results of individual technical testing. These descriptions and other product features are only binding if they expressly agreed upon at the time of the conclusion of a binding contract. In all other cases, we reserve the right to make technical changes as well as changes of availability. Pictures and other graphic illustrations are approximations only. All product names may be trademarks or brand names of the RAFI Group or any other sub-supplier of RAFI. The use of such by any third parties for their own purposes may infringe the rights of the respective entity holding those rights.

RAFI GmbH & Co. KG

Ravensburger Str. 128-134
88276 Berg / Ravensburg
Germany
www.rafi-group.com,
info.headquarters@rafi-group.com

Packaging drawing

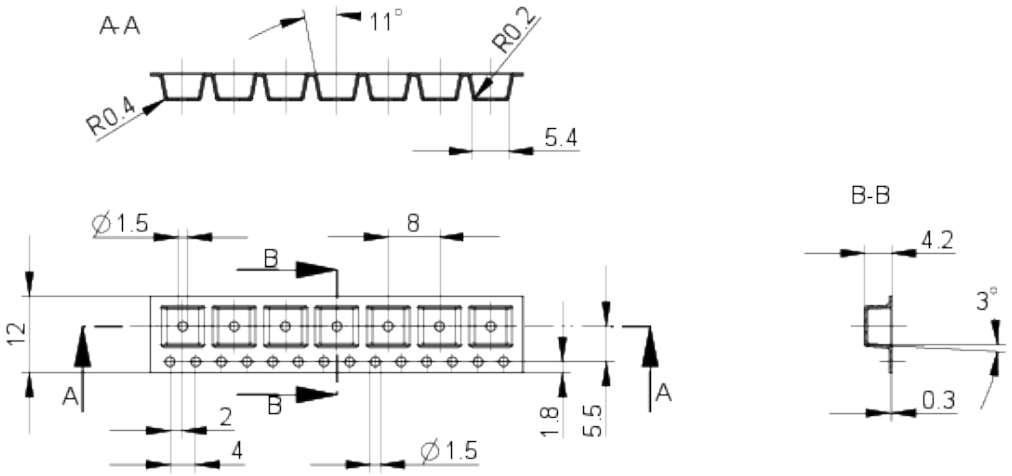

The information in this data sheet only contains general descriptions and / or performance features, which may not apply precisely as described to the respective application, and which my change due to further product enhancements. The technical data, illustrations and other information about our products are the mere results of individual technical testing. These descriptions and other product features are only binding if they expressly agreed upon at the time of the conclusion of a binding contract. In all other cases, we reserve the right to make technical changes as well as changes of availability. Pictures and other graphic illustrations are approximations only. All product names may be trademarks or brand names of the RAFI Group or any other sub-supplier of RAFI. The use of such by any third parties for their own purposes may infringe the rights of the respective entity holding those rights.

RAFI GmbH & Co. KG

Ravensburger Str. 128-134
88276 Berg / Ravensburg
Germany
www.rafi-group.com,
info.headquarters@rafi-group.com

mounting

RAFI soldering profile for ROHS compliant reflow components

Publication date: October 7, 2021

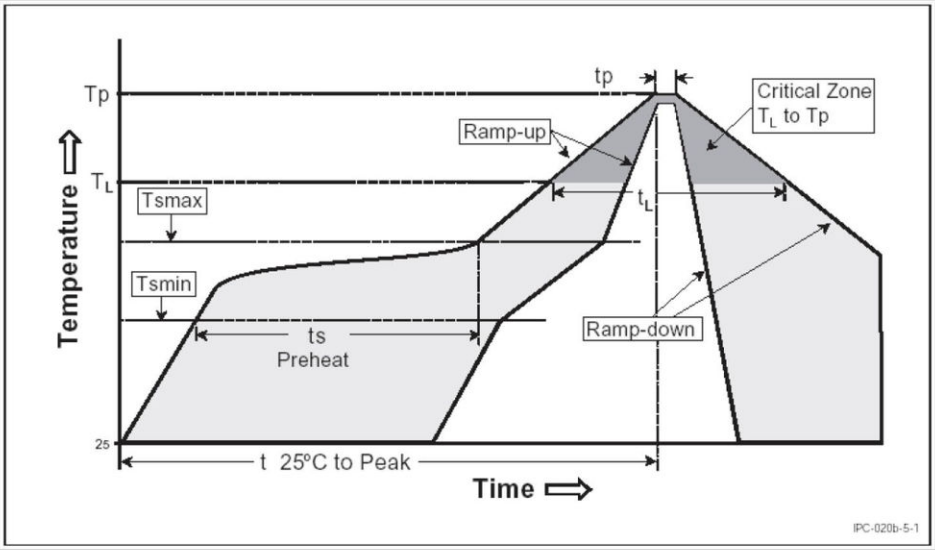

Parameter	RAFI values
Gradient (T_L to T_P)	max. 3°C / s
Preheating zone Minimum temperature (T_{smin}) Maximum temperature (T_{smax}) Time (from min. to max.) (ts)	 150°C 200°C 60 - 120 s
Gradient (T_{smax} to T_L)	max. 3°C / s
Time over melting temperature (T_L) time (t_L)	 217°C 60 – 150 s
Peak temperature (T_P)	max. 260°C (+0°C)
Time within peak temperature – 5°C (tp)	20-40 s
Gradient ramp down	max. 6°C / s
Time difference from 25°C to peak temperature	max. 8 minutes

The reflow soldering profile is based on the definition of Jedec J-STD-020D.

The information in this sheet only contains general descriptions and / or performance features, which may not apply precisely as described to the respective application, and which my change due to further product enhancements. The technical data, illustrations and other information about our products are the mere results of individual technical testing. These descriptions and other product features are only binding if they expressly agreed upon at the time of the conclusion of a binding contract. In all other cases, we reserve the right to make technical changes as well as changes of availability. Pictures and other graphic illustrations are approximations only. All product names may be trademarks or brand names of the RAFI Group or any other sub-supplier of RAFI. The use of such by any third parties for their own purposes may infringe the rights of the respective entity holding those rights. Subject to change and errors excepted. Details about delivery times and availability are noncommittal and have no legal force.

RAFI GmbH & Co. KG
Ravensburger Str. 128-134, 88276 Berg / Ravensburg
GERMANY – www.rafi-group.com

The information in this data sheet only contains general descriptions and / or performance features, which may not apply precisely as described to the respective application, and which my change due to further product enhancements. The technical data, illustrations and other information about our products are the mere results of individual technical testing. These descriptions and other product features are only binding if they expressly agreed upon at the time of the conclusion of a binding contract. In all other cases, we reserve the right to make technical changes as well as changes of availability. Pictures and other graphic illustrations are approximations only. All product names may be trademarks or brand names of the RAFI Group or any other sub-supplier of RAFI. The use of such by any third parties for their own purposes may infringe the rights of the respective entity holding those rights.

RAFI GmbH & Co. KG

Ravensburger Str. 128-134
88276 Berg / Ravensburg
Germany
www.rafi-group.com,
info.headquarters@rafi-group.com