Brand of NTN corporation

Technical data

EXP205

Bearing units



Grey cast housing, radial insert ball bearing with eccentric locking collar, seal with slinger

KIT CONTENT

EX205G2, P205

VISUAL (S)

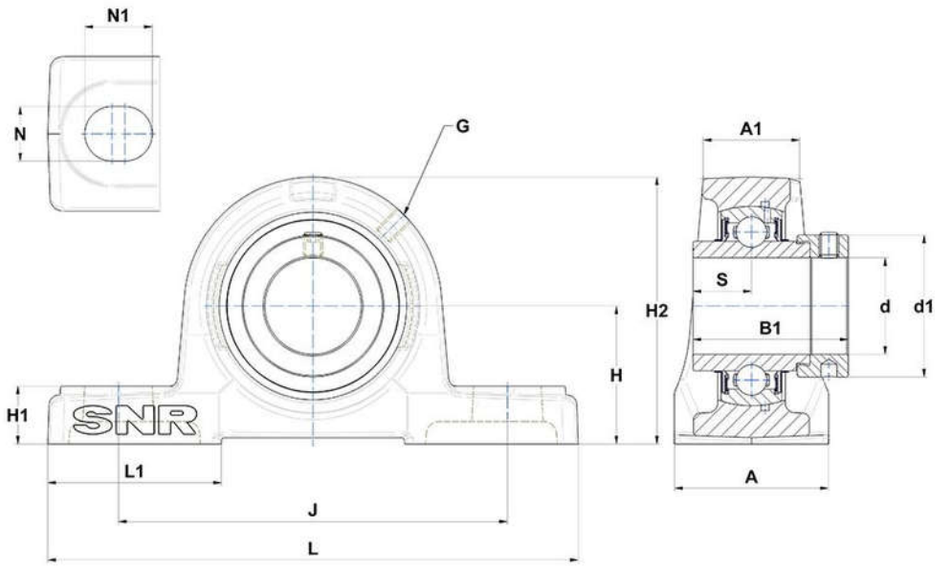

PRODUCT DEFINITION

Brand	SNR
A - Housing width	38 mm
A1 - Housing top width	26 mm
B - Width of Inner Ring	34,8 mm
d - Shaft diameter	25 mm
d1 - Outer dia of eccent. Lock. collar / nut of adapter sleeve	37,4 mm

NTN Europe
1 rue des Usines · BP 2017 · 74010 Annecy Cedex · France · Tel. +33 (0)4 50 65 30 00
S.A. au capital de 322 639 919 € · RCS ANNECY B 325 821 072 · Id. Fiscale : FR 48 325 821 072
SIRET 325 821 072 00015 · Code APE 2815 Z · Code NACE 28.15

PRODUCT DEFINITION	
G - Grease fitting	M6x1
H - Distance mounting base to centerline spheric. seating diam.	36,5 mm
H1 - Housing foot height	16 mm
H2 - Housing height	70 mm
J - Mounting holes distance	105 mm
L - Housing length	140 mm
L1 - Housing foot length	42 mm
N - Mounting hole dimension	13 mm
N1 - Mounting hole length	19 mm
S - Distance front side/bearing centre	17,4 mm

PRODUCT PERFORMANCE	
C - Dynamic load rating	14000000 mN
C0 - Static load rating	7880000 mN
Operating temperature min.	253,15 °K
Operating temperature max.	373,15 °K

OTHER FEATURES	
Mass	0,85 kg
Recommended tightening torque for set screw	5.5 N-m