A2520040

ROUND KNOB 20, without line

Suitable for rotary potentiometer with round shaft ends according to DIN 41591. Collet system for convenient knob assembly from the front and simple adjustment (with adjustment key - sep. article). Continuous center hole.
Max. torque: assembly = 0.8 Nm, function = 0.7 Nm.

Supply
1 round knob



TECHNICAL DATA

Material	ABS (UL 94 HB)
Colour	black RAL 9005
Standards	RoHS compliant, REACH compliant

Diameter	20 mm
Height	15 mm
Bore hole	4 mm

Please take the dimensions from current parts. These are subject to material- and manufacturing-specific tolerances.

PURCHASING DATA

Weight/1 part	7.9 g
Customs tariff number (OKW product)	84879090
Country of manufacture	Germany

CUSTOMISING OPTIONS

What else do you need to create your own personal product? We can supply our enclosures and tuning knobs fully modified to suit your electronic components and design requirements. Please advise for anything else we can do for you.

A2520040

ROUND KNOB 20, without line

Customising options for A2520040



Machining



Printing



Installation / Assembly of accessories

A2520040

ROUND KNOB 20, without line

SYSTEM COMPONENTS TO COMPLETE



A4120000
Cover 20, without line
ABS (UL 94 HB)
black RAL 9005



A4120002
Cover 20, without line
ABS (UL 94 HB)
red RAL F12/0-10



A4120005
Cover 20, without line
ABS (UL 94 HB)
green RAL F12/0-43



A4120006
Cover 20, without line
ABS (UL 94 HB)
light blue RAL 5012



A4120007
Cover 20, without line
ABS (UL 94 HB)
pebble grey RAL 7032



A4120008
Cover 20, without line
ABS (UL 94 HB)
dusty grey RAL 7037



A4120100
Cover 20, with line
ABS (UL 94 HB)
black RAL 9005



A4120102
Cover 20, with line
ABS (UL 94 HB)
red RAL F12/0-10



A4120104
Cover 20, with line
ABS (UL 94 HB)
yellow RAL F12/0-1



A4120106
Cover 20, with line
ABS (UL 94 HB)
light blue RAL 5012



A4120107
Cover 20, with line
ABS (UL 94 HB)
pebble grey RAL 7032



A4120108
Cover 20, with line
ABS (UL 94 HB)
dusty grey RAL 7037

ACCESSORY "SCREWS"



A6207009
Round nut M7 x 0.75



A6210009
Round nut M10 x 0.75



A6295009
Round nut 3/8"-32G



A6300000
Spanner

A2520040

ROUND KNOB 20, without line

ACCESSORY



A4220000
Arrow disk 20
ABS (UL 94 HB)
black RAL 9005



A4220002
Arrow disk 20
ABS (UL 94 HB)
red RAL F12/0-10



A4220008
Arrow disk 20
ABS (UL 94 HB)
dusty grey RAL 7037



A4420001
Dial 20
PC (UL 94 HB)
transparent



A4420010
Dial 20
PC (UL 94 HB)
transparent



A4420060
Dial 20
PC (UL 94 HB)
transparent



A6020019
Stator 20
Aluminium



A6403005
Adjusting key 20/23/31
ABS (UL 94 HB)
green

Subject to technical modification without notice. © by OKW Gehäusesysteme, Buchen/Germany.

Schnitt A-A

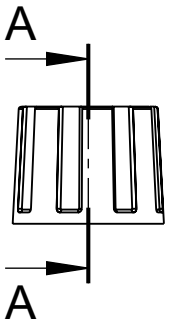

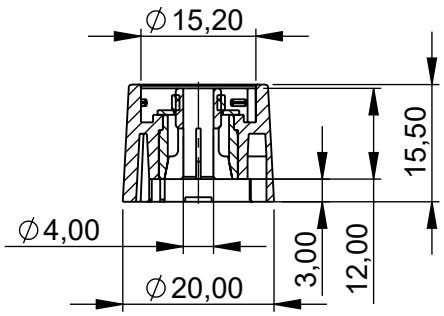

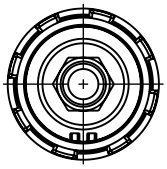

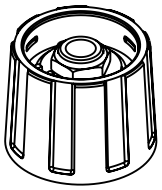

Bitte die Maße an aktuellen Teilen abnehmen. Diese unterliegen material und produktionsspezifischen Fertigungstoleranzen		Please take the dimensions from current parts. These are subject to material- and manufacutring-specific tolerances		
Informationskopie wird nicht aktualisiert Copy for Information will not be updated	Erst. am: 06.04.2020 Erst. von: J. Farrenkopf Freig. am: Freig. von: Revision: 01	Toleranzen: DIN 16901 T130 Volumen:	Status: ENTWICKLUNG Zeichnungsart: KUNDE	DIN 6 Teil 2
Technische Änderungen vorbehalten. Irrtümer oder Druckfehler begründen keinen Anspruch auf Schadenersatz. Wichtige Einbaumaße bitte direkt mit dem aktuellen Produkt abstimmen. Subject to technical modification without prior notice. Typographical and other errors do not justify any claim for damages. All dimensions should be verified using an actual moulded part. Sous reserve de modifications techniques. Toute erreur ou faute d'impression ne justife aucune demande d'indemnisation. Nous prions les clients de verifer les dimensions des composants avec les boitiers avant le montage.	OKW GEHÄUSE SYSTEME	This document contains proprietary information of OKW Gehäusesysteme GmbH and is tendered subject to the conditions that the information be retained in confidence not be reproduced or copied and not be used or incorporated in any product.		
		KOMBIKNOEPFE-SPANNZANGE 20 Rundknopf 20 mit Spannzange d=4mm		
		A2*20040		M 1:1
		Für dieses Dokument behalten wir uns alle Urheberrechte vor. Es darf auch auszugsweise weder vervielfältigt noch Dritten in irgendeiner Form zugänglich gemacht werden.		Dateiname: 00021846