

Image may differ from product. See technical specification for details.

TSN 517 C

Felt seal

Felt seals provide a simple and effective sealing solution. They accommodate relatively high shaft speeds, because a small gap forms between the felt and shaft, transforming the seal into a non-contact, gap-type seal. Felt seals do not limit axial movements of the shaft. When ordering, please note that one item (seal pack) contains two seals (four halves).

- Easy to install
- Cost-effective
- Suitable for relatively high shaft speeds

Overview

Dimensions

Outside diameter	103.5 mm
Shaft diameter	75 mm
Housing groove diameter	106 mm
Width	10 mm

Properties

Accessory type	Housing seal
Sealing type	Felt
Material	Felt with aluminium and nitrile rubber elements

Logistics

Product net weight	0.13 kg
eClass code	23-05-17-90
UNSPSC code	31171519

Technical specification

Material	Felt with aluminium and nitrile rubber elements

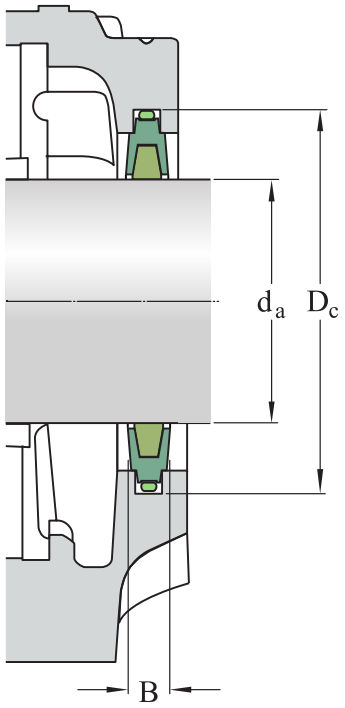

Dimensions

d_a	75 mm	Shaft diameter
D_c	106 mm	Diameter of seal groove
B	10 mm	Width

Terms of use