PU5603

Pressure transmitter

PU-025-SEG14-B-DVG/AM

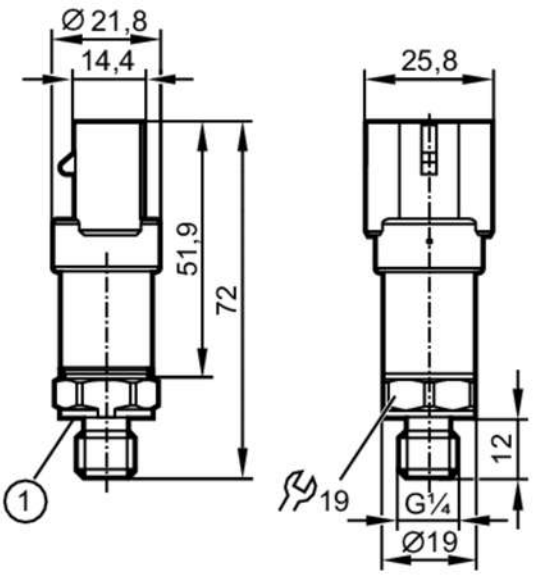

1 Sealing

Product characteristics				
Number of inputs and outputs		Number of analogue outputs: 1		
Measuring range		0...25 bar	0...360 psi	0...2.5 MPa
Process connection		threaded connection G 1/4 external thread (DIN EN ISO 1179-2)		
Application				
Application		for mobile applications		
Media		liquids and gases		
Medium temperature	[°C]	-40...125		
Min. bursting pressure		600 bar	8700 psi	60 MPa
Pressure rating		65 bar	940 psi	6.5 MPa
Note on pressure rating		static		
Vacuum resistance		-1000 mbar	-0.1 MPa	
Type of pressure		relative pressure		
Electrical data				
Operating voltage	[V]	16...32 DC		
Current consumption	[mA]	< 12		
Min. insulation resistance	[MΩ]	100; (500 V DC)		
Protection class		III		
Reverse polarity protection		yes		
Power-on delay time	[s]	< 0.1		
Inputs / outputs				
Number of inputs and outputs		Number of analogue outputs: 1		
Outputs				
Total number of outputs		1		
Output signal		analogue signal		
Number of analogue outputs		1		

PU5603

Pressure transmitter

PU-025-SEG14-B-DVG/AM

Analogue voltage output	[V]	0...10		
Min. load resistance	[Ω]	2000		
Short-circuit proof		yes		
Overload protection		yes		
Measuring/setting range				
Measuring range		0...25 bar	0...360 psi	0...2.5 MPa
Accuracy / deviations				
Repeatability	[% of the span]	< ± 0,05; (with temperature fluctuations < 10 K)		
Characteristics deviation	[% of the span]	< ± 0,8; (incl. drift when overtightened, zero point and span error, non-linearity, hysteresis)		
Linearity deviation	[% of the span]	< ± 0,25 (BFSL) / < ± 0,5 (LS)		
Hysteresis deviation	[% of the span]	< ± 0,2		
Long-term stability	[% of the span]	< ± 0,1; (per 6 months)		
Temperature coefficient zero point	[% of the span / 10 K]	< ± 0,1 (0...80 °C); < ± 0,2 (-40...0 °C / 80...125 °C)		
Temperature coefficient span	[% of the span / 10 K]	< ± 0,1 (0...80 °C); < ± 0,3 (-40...0 °C); < ± 0,2 (80...125 °C)		
Response times				
Step response time analogue output	[ms]	2		
Operating conditions				
Ambient temperature	[°C]	-40...100		
Storage temperature	[°C]	-40...100		
Protection		IP 67; IP 69K		
Tests / approvals				
EMC		compliant with UN ECE R10, rev. 5	(E1 compliant)	
		ISO 11452-2	100 V/m	
		DIN EN 61326-1		
Shock resistance		DIN EN 60068-2-27	500 g (1 ms)	
Vibration resistance		DIN EN 60068-2-6	20 g (10...2000 Hz)	
MTTF	[years]	640		
Pressure Equipment Directive		Sound engineering practice; can be used for group 2 fluids; group 1 fluids on request		
Mechanical data				
Weight	[g]	61.75		
Housing		cylindrical		
Dimensions	[mm]	Ø 21.8 / L = 72		
Materials		stainless steel (630/1.4542/17-4 PH); stainless steel (316L/1.4404); PPS		
Materials (wetted parts)		stainless steel (630/1.4542/17-4 PH)		
Min. pressure cycles		60 million; (at 1.2 times nominal pressure)		
Tightening torque	[Nm]	25...35; (recommended tightening torque; depends on lubrication, seal and pressure rating)		
Process connection		threaded connection G 1/4 external thread (DIN EN ISO 1179-2)		

PU5603

Pressure transmitter

PU-025-SEG14-B-DVG/AM

Process connection sealing	HNBR (DIN EN ISO 1179-2)
Restrictor element integrated	yes

Remarks

Remarks	BFSL = Best Fit Straight Line
	LS = limit value setting
Pack quantity	1 pcs.

Electrical connection

Connector: 1 x AMP-Superseal; Maximum cable length: 30 m

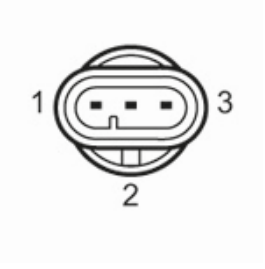

Connection

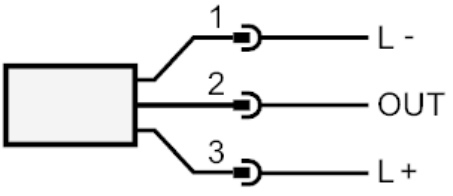

OUT	analogue output