SN series

Hall effect T-bar fader



The SN series is a precision fader control designed and built to meet the demands of the broadcast industry. Contactless Hall effect technology, using the latest generation sensors, results in reliable noise-free operation. A smooth consistent feel is achieved by utilizing steel ball races and PTFE bearing surfaces. The SN series is available with analog linear voltage or PWM outputs, having a range of factory configured gain settings. The mechanical design is complemented by two aluminum handle options in "Barrel" and "Bullet" styles.



KEY FEATURES

- ❑ **Consistent smooth feel**
- ❑ **Precision ball race bearings & PTFE guides**
- ❑ **Latest generation Hall effect sensor**
- ❑ **12 bit resolution**
- ❑ **"Barrel" or "Bullet" aluminum handles**
- ❑ **Analog voltage or PWM output options**
- ❑ **Absolute positioning**
- ❑ **Industry standard mounting**



SN series

Hall effect T-bar fader

OPTION SELECTION

SN [ ] [ ] [ ] [ ]

SERIES

OUTPUT	
1	Analog
2	PWM

POLARITY	
S	Standard
R	Reversed

HANDLE	
S	Barrel Handle
N	Bullet Handle

Barrel Handle

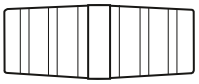

Bullet handle

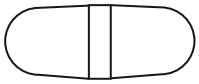

GAIN	
01	±50%xV
02	±40%xV
03	±30%xV
04	±25%xV
05	±10%xV

OUTPUT VOLTAGE POLARITY

Standard

Low Voltage — High Voltage

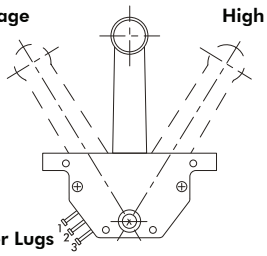

Reversed

High Voltage — Low Voltage

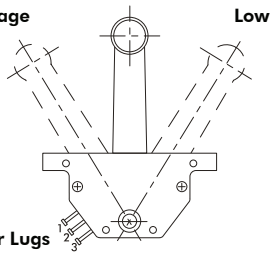

SPECIFICATIONS

MECHANICAL		
Operating Force	–	0.5N
Mechanical Angle of Movement	–	63° (±31.5°from center)
Expected Life	–	1 Million Operations
Mass/Weight	–	65g
Package Size (mm) (L x W x H) or (Dia x H)	–	75 x 96 x 42mm
Lever Action (Centering)	–	Friction Clutch

ENVIRONMENTAL		
Opearting Temperature	–	-20°C to +70°C (-4°F to +158°F)
Storage Temperature	–	-40°C to +70°C (-40°F to +158°F)
Sealing (IP)	–	Not sealed. For internal applictions only.

MATERIALS		
Body	–	Mineral filled nylon - Black
Lever	–	Acetyl - Black
Handle	–	Aluminum - Silver anodized
Screening Plates	–	Mild Steel - Zinc plated

ELECTRICAL SENSOR		
Sensor	–	Hall effect
Output at Center	–	V/2 ± (5% x Gain)
Power Supply	–	5V ± 0.5V Transient free
Reverse Polarity Max	–	-10VDC
Overvoltage Max	–	20VDC
Output Voltage	–	0V to 5V (See gain options)
Output Impedance	–	10Ω
Current Consumption Typ	–	13mA
Typ	–	Greater than 100K

Notes: All values are nominal.
All specifications shown are based on a standard configuration and are provided for guidance only.
Please contact factory for assistance on how to achieve the best performance from your chosen configuration.
The company reserves the right to change specifications without notice.

SN series

Hall effect T-bar fader

DIMENSIONAL DRAWINGS

Front View

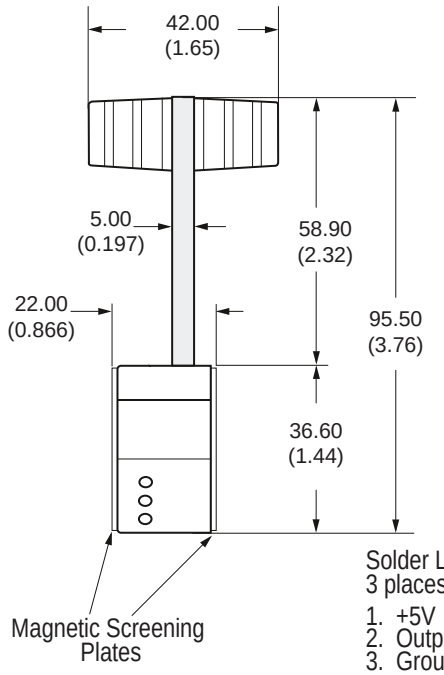

Front View

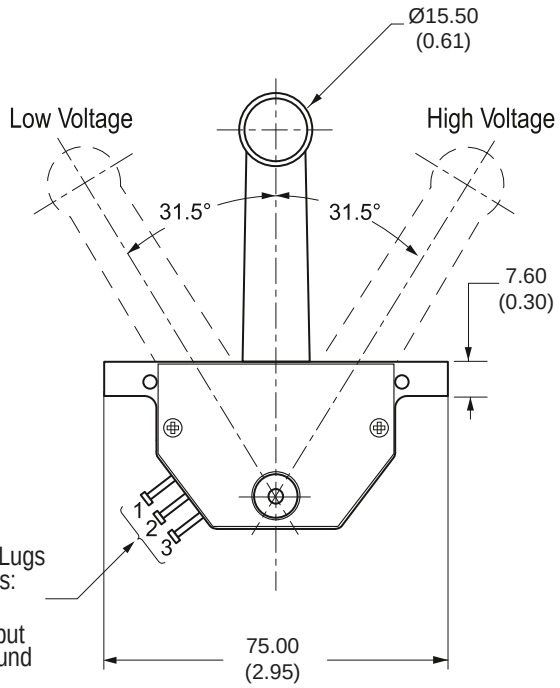

Front View

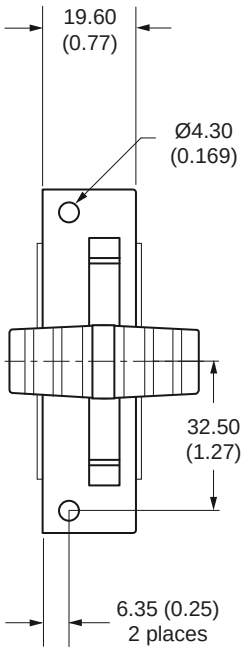

Installation Dimensions

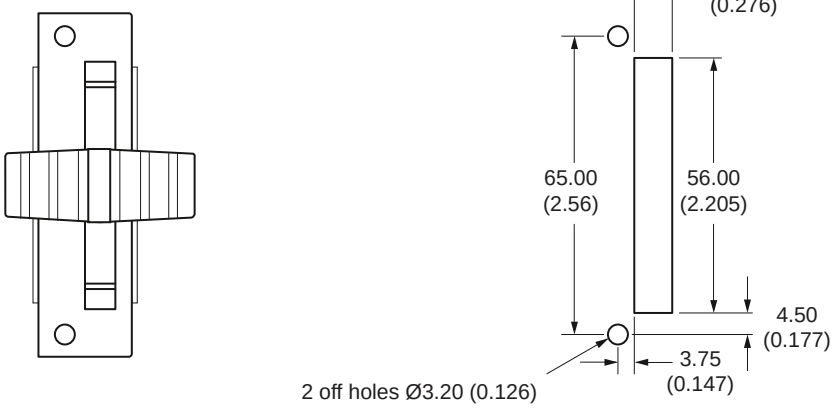

Notes: The company reserves the right to change specifications without notice.
Images shown are for illustration purposes only.
Dimensions in mm/(inch)

GAIN OPTIONS

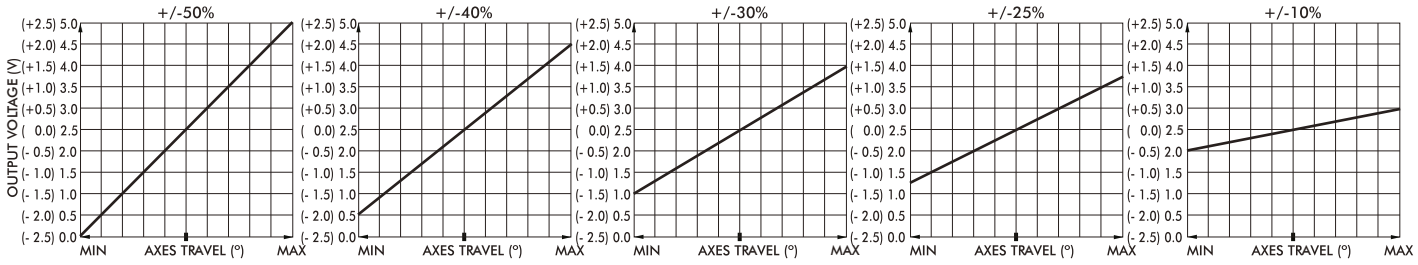

MECHANISM

The SN series utilizes high quality ball bearings at the pivot point of its lever and uses a PTFE friction clutch assembly to create a smooth, damped, put and stay feel of the lever to ensure a consistent feel over the life of the product.

POWER SUPPLY

The SN series is designed to be powered by a regulated 5V+/-0.5V power supply. The output is ratiometric, making a stable, noise free, power supply essential. The power supply to the SN series should be carefully regulated to be within tolerance. Should the power supply change outside specified tolerances, permanent damage may occur.

MAGNETIC IMMUNITY AND SYSTEM DESIGN

The SN series faders incorporate magnetic shielding, however, mounting or operating the SN series close to strong magnetic fields is not recommended. System designers should follow best practice when incorporating the SN series into their products. Care should be taken to disconnect the power supply properly and to employ adequate EMC shielding.

MOUNTING

When mounting the SN series, care should be taken to site it in a position that does not make it vulnerable to damage when in use. The SN series must not be subject to water spray, excessive humidity or dust. The handle is supplied separately, in two halves that must be screwed together after the SN series has been mounted to the panel.

GAIN OPTIONS

The voltage output on the wiper, at full scale deflection is determined by the gain. The gain is expressed as a percentage of the voltage supplied. Therefore (assuming a 5V supply), an SN series specified with +/-25% gain would yield 1.25V at South and 3.75V at North. A range of gain options are available as standard.
All SN series are supplied pre-set and no further calibration is needed throughout the lifetime of operation.

OUTPUT IMPEDANCE

The voltage output at the center and at each end of travel are specified across an infinite load, with no current flowing. The output impedance specified in the electrical specification should be taken into account when designing a system. Load resistance of less than 10K Ohms is not recommended.

CONNECTIONS

The SN series are supplied with three solder post connections.

Additional cable outputs and customer specific connectors are available on request.

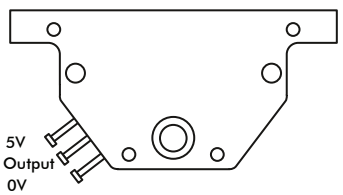

PIN 1 (UPPER) 5V
PIN 2 (MIDDLE) Output
PIN 3 (LOWER) 0V

Notes: The company reserves the right to change specifications without notice.