PRODUCT DETAILS

ARTICLE: 32509BFD

WHEEL LB 125X40/40 PB BOLT HOLE FORK M22 /50 HOLE 14



Wheel series LB

Wheels with black polyamide 6 centre, blue elastic non-marking rubber mould-on solid tyre available with ball bearings, standard or stainless steel roller bearings od plain bore.
Plain bore wheel.

Castor series M22

M22 series, Medium-light pressed steel fork assemblies; swivel version has double ball raceways. Zincplated.

Sigle bolt hole fixing for bolt diam. 12-14 mm.

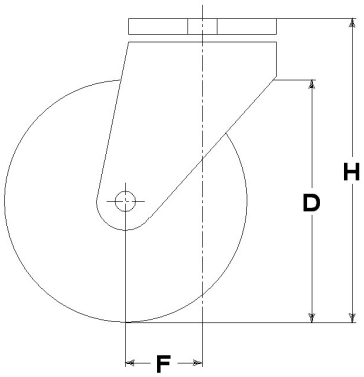

Technical data

Wheel diameter	D	125 mm
Tyre width	E	40,0 mm
Bore diameter	d	15 mm
Weight article		1,160 kg
Hub width	L	40 mm
Overall height	H	159 mm
Fixing bolt diameter	g	M12-14
Offset	F	49 mm
Fork width	U	50 mm
Load Capacity		200 kg

Related Articles

Spare part wheel: 30114B
Version with thread-guards: 32509BPFFD
Version with footguard: 32509BPPFD
Version with trailing brake: 32509BFRFD
Version with trailing brake and footguard: 32509BFRPPFD

GENERAL INFORMATION / RECOMMENDATIONS AND WARNINGS
The cited text and the complete catalogue in their most up-dated versions are available in the OEM's website page www.lagspa.it/downloads. The dimensions, descriptions, specifications and illustrations herein are indicative and subject to variations without notice. The fact that products are illustrated herein does not necessarily imply they are available from stock nor does it place us under any obligation to supply them.
Tests carried out refer to the original products with original accessories: the replacement of one of the components with others of different manufacture might prevent the same results from being achieved and will automatically invalidate any guarantee. Please contact our technical service concerning any special application.