Overhead Closer

2130B
2130BD

Introduction

The 2130B is a spring adjustable power size EN 2-6 overhead door closers with backcheck. Certified for door and frame mount applications, this flexible closer combines engineering quality and good looks to create a truly versatile solution for any severe or heavy duty application.



2130B.C.SES

Features & Functions

- Spring adjustable power size EN 2-6
- Capable of meeting BS8300 requirements
- Certified in door mount pull and transom mount push side applications (EN 2-6)
- Certified in parallel arm mount (2130B EN 2-5) (2130BD EN 1-5)
- Universal fittings for door mount, transom and parallel arm mount
- Adjustable closing speed & latch action
- Built-in adjustable backcheck to prevent damage to the door and frame
- Pre-assembled arm and bracket simplifies assembly, increasing speed and accuracy of installation
- Unique self-adhesive 'Accufit' installation template and mounting plate with dowel fixings to position the closer body ensure a quick, simple and accurate installation
- Suitable for fire door applications
- Classic cover conceals fixings and adjustment screws

Certification

CE Marked to EN 1154 (2812-CPR-AD0031)

UKCA Marked to EN 1154 (1121-CPR-UK-AD7578)

Fire tested to EN 1634-1 for use on fire doors up to 2hr timber / 1hr steel *[* May be fitted to fully insulated steel based doorsets or uninsulated steel based doorsets where the closer is fitted to the fire risk face only].*

Certifire Approved (CF111) (* Briton 2130B only)

Environmental Product Declaration in accordance with ISO 14025 & EN 15804

DoP available at www.britondops.co.uk

Allegion (UK) Limited
35 Rocky Lane, Aston, Birmingham B6 5RQ
T: +44 (0) 330 8080 617
E: contactuk@allegion.com

Briton

DOOR CONTROLS

Overhead Closer Briton 2130B & 2130BD

Product features	Product references	
	2130B	2130BD
Closer type	Projecting/scissor arm	Projecting/scissor arm
CE marked	■	
Closing power EN size	2 - 6 2 - 5 (parallel arm)	2 - 6 1 - 5 (parallel arm)
Adjustment type	Spring power	Spring power
Door limits (width/weight)	1400mm/120kg	1400mm/120kg
Maximum angle of opening	180˚	180˚
Adjustable closing speed & latch action	■	■
Adjustable backcheck	■	■
Adjustable delayed action (Not CE marked)		■
Tri-pack armset	■	■
Mechanical hold-open facility (non fire doors only)	□	□
Cover variants	C cover	C cover
Finishes available	SES, SSS, PBS, PSS	SES, SSS, PBS, PSS
CE Classification	4 8 2-6 1 1 3	4 8 2-6 0 1 3

■ Standard

□ Available as an option/variant

Accessories & Parts	
2130.AP	Arm pack
2130.APH	Hold-open arm pack
2130.BP	Bracket pack
2130.FP.ZP	Fixing pack
2130.H.BRK.66	Fig.66 hold-open bracket
2130.DP01.C.SE	Fig.1 drop plate
2130.DP01.C.PS	Fig.1 drop plate
2130.DP01.C.SE	Fig.66 drop plate
2130.DP01.C.PS	Fig.66 drop plate

Closer with Classic C cover

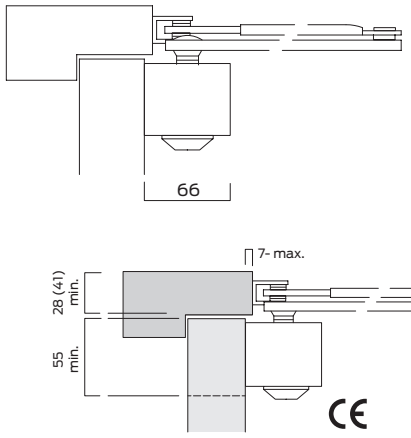

Fig.1
Door mount pull side

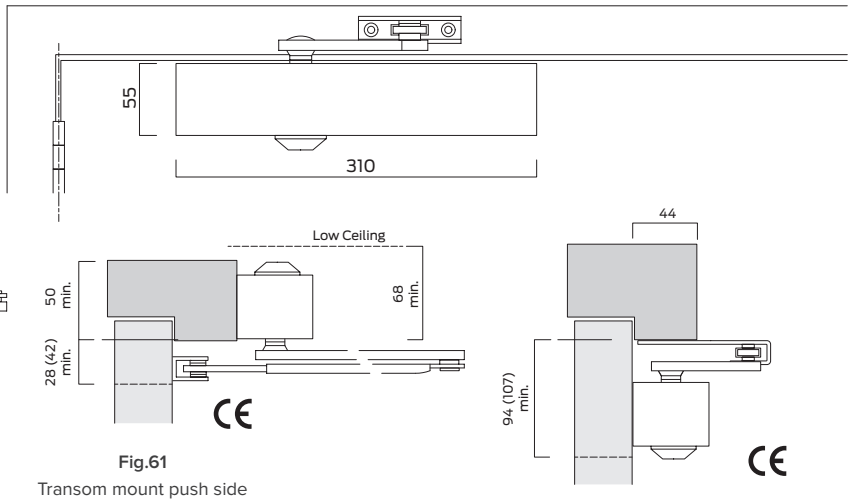

Fig.61
Transom mount push side

Fig.66
Parallel arm push side mount

All dimensions are in mm

Figures in brackets refer to dimensions when used with hold-open armset

Finishes

All finish variants are supplied with matching armset and brackets.

Other sprayed finishes are available on request.

SES
Sprayed silver



SSS
Satin stainless steel



PSS
Polished stainless steel



PBS
Polished brass

Overhead Closers

2130B
2130BD

Installation dimensions

Regular Application [Fig.1]

Door mounted application for power sizes EN 2 - 6

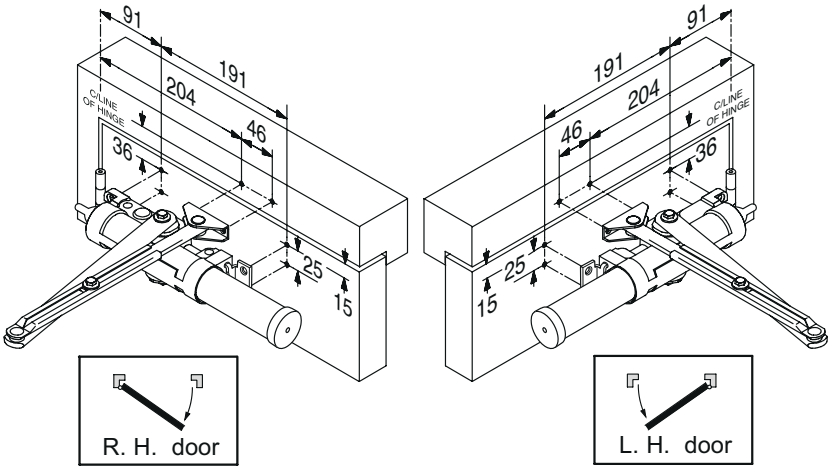

Transom Application [Fig.61]

Transom mounted push side for power sizes EN 2 - 6

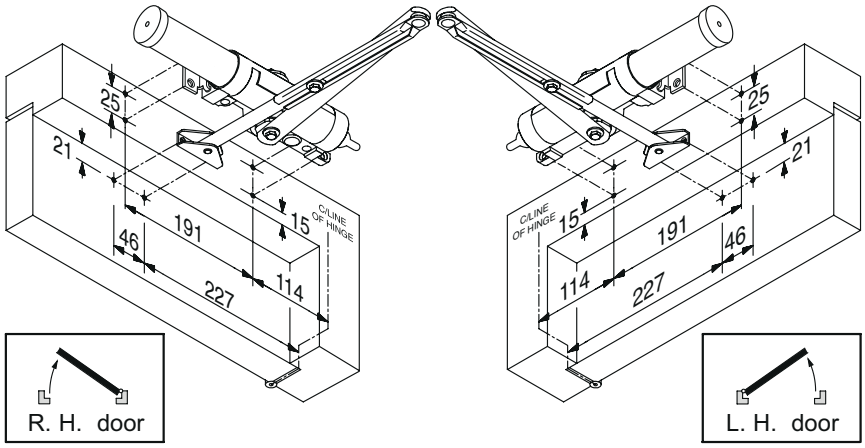

Parallel Arm Application [Fig.66]

Door mounted push side for power sizes EN 1 - 5

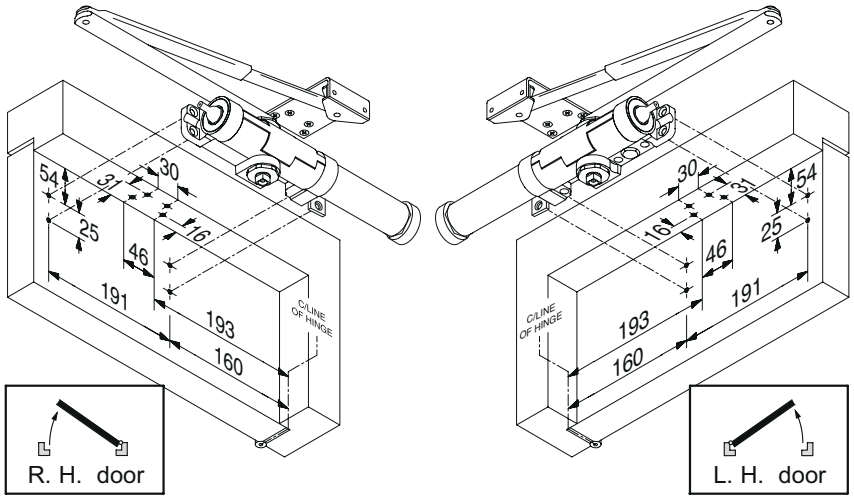

Allegion (UK) Limited
35 Rocky Lane, Aston, Birmingham B6 5RQ
T: +44 (0) 330 8080 617
E: contactuk@allegion.com

General Maintenance

2130B
2130BD

Door controls

In research, Allegion has identified that 95% of all problems associated with overhead door closers can be attributed directly to errors in installation rather than problems with the door closer itself. If the door is not closing properly into the frame you should first disconnect the door closer (disconnect the arm(s)) and determine that there is not an underlying problem with the door, frame or any smoke / draft seals that might be fitted.

PLEASE NOTE:

The power of the door closer should not be used to overcome problems associated with the door or other items of hardware fitted to it.

Under no circumstances should the closer body be dismantled.

Types of maintenance

Much of the routine maintenance recommended consists of a combination of visual and mechanical checks, cleaning and lubrication. Look out for the icons opposite which provide a 'quick glance' reminder of the maintenance required.

Visual checks

Primarily making a visual check on the product and surrounding door/frame looking for wear, damage, and general condition.



Functional checks

Consists of checking that the product operates properly ensuring the door can fully close without any binding or undue force required. Check that any seals or weatherstripping do not inhibit correct operation of the door



Check fixings

Fixings need to be checked regularly and tightened when necessary. Check that no projection of fixings prevents the door from swinging freely.



Lubricating

Some products will benefit from periodic lubrication using a light machine oil or as instructed.



Cleaning

Build up of grease, dust and harmful chemicals should be removed to prevent corrosion and maintain the product finish.



Allegion (UK) Limited
35 Rocky Lane, Aston, Birmingham B6 5RQ
T: +44 (0) 330 8080 617
E: contactuk@allegion.com

Closer Maintenance

WEEKLY

Release the door from the fully open position and ensure that it closes fully into the frame. Ensure the latch (if fitted) engages fully into the strike plate. Repeat the process a few times from different angles of opening to ensure the door closes consistently each time.



Check and adjust the closing and latching speeds if necessary.

Check the backcheck comes into operation at the desired angle and readjust if necessary.

Check the delayed action and adjust the time delay if necessary.

Check that the door or hardware does not come into contact with the door frame or the surrounding structure.



QUARTERLY

The fixings of the closer body and the bracket are subject to stress and should be checked carefully to make sure they are tight.



Periodically apply a little light machine oil to the moving joints of the arm and bracket.



Check any fire and smoke seals to ensure they do not foul the action of the door.



Check for any loss of fluid from the door closer body which would indicate a failing device.

Clean the closer body, arms and bracket if necessary following the guidance on “Care of Finishes” on page 16 of the ‘Service & Maintenance Guide’.



FIRE DOOR APPLICATIONS

When installed as part of a fire precaution system the door closing mechanism, including the door selector if used on a double door arrangement, should be checked in accordance with standing periodic fire testing procedures.

Routinely check that all fixings of the closer body and bracket are tight.

Routine care of finishes as necessary.