Product datasheet

Specifications



inductive sensor XS8 80x80x26 - PBT - Sn60mm - 24..240VAC/DC - 1/2"

XS8D1A1MAU20

Main

Range of product	Telemecanique Inductive proximity sensors XS
Series name	General purpose
Sensor type	Inductive proximity sensor
Device application	-
Sensor name	XS8
Sensor design	Flat form 80 x 80 x 26
Size	26 mm
Body type	Fixed
Detector flush mounting acceptance	Non flush mountable
Material	Plastic
Enclosure material	PBT
Type of output signal	Discrete
Wiring technique	2-wire
[Sn] nominal sensing distance	40 mm flush mountable 60 mm non flush mountable
Discrete output function	1 NO
Output circuit type	AC/DC
Electrical connection	Male connector 1/2"20 UNF, 3 pins
[Us] rated supply voltage	24...240 V AC/DC 50/60 Hz
Switching capacity in mA	5...200 mA DC 5...300 mA AC
IP degree of protection	IP67 double insulation conforming to IEC 60529

Complementary

Detection face	Frontal
Front material	PBT
Fine adjustment zone	20…40 mm flush mountable 20…60 mm non flush mountable
Differential travel	1...15% of Sr
Supply voltage limits	20…264 V AC/DC

Disclaimer: This documentation is not intended as a substitute for and is not to be used for determining suitability or reliability of these products for specific user applications

Maximum residual current	1.5 mA open state
Switching frequency	<= 150 Hz
Maximum voltage drop	<5.5 V (closed)
Current consumption	<= 10 mA no-load
Maximum delay first up	15 ms
Maximum delay response	0.3 ms
Maximum delay recovery	6 ms
Marking	CE
Depth	26 mm
Height	80 mm
Width	80 mm
Net weight	0.34 kg

Environment

Product certifications	CCC UL CSA Ecolab
Ambient air temperature for operation	-25…70 °C
Ambient air temperature for storage	-40…85 °C
Vibration resistance	25 gn amplitude = +/- 2 mm (f = 10…55 Hz) conforming to IEC 60068-2-6
Shock resistance	50 gn for 11 ms conforming to IEC 60068-2-27

Packing Units

Unit Type of Package 1	PCE
Number of Units in Package 1	1
Package 1 Weight	380.0 g
Package 1 Height	4.2 cm
Package 1 width	9.6 cm
Package 1 Length	13.2 cm
Unit Type of Package 2	S01
Number of Units in Package 2	11
Package 2 Weight	4.361 kg
Package 2 Height	15 cm
Package 2 width	15 cm
Package 2 Length	40 cm

Offer Sustainability

Sustainable offer status	Green Premium product
REACh Regulation	REACh Declaration
EU RoHS Directive	Pro-active compliance (Product out of EU RoHS legal scope) EU RoHS Declaration
Mercury free	Yes
RoHS exemption information	Yes

Environmental Disclosure	Product Environmental Profile

Contractual warranty

Warranty	18 months

Product datasheet XS8D1A1MAU20

Dimensions Drawings

Dimensions

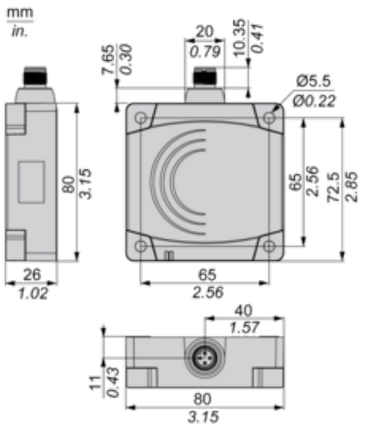

Life Is On Schneider Electric

Product datasheet XS8D1A1MAU20

Mounting and Clearance

Setting-up

Minimum Mounting Distances (mm)

Side by Side

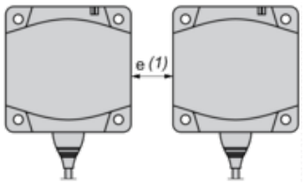

Face to Face

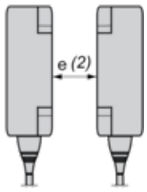

Facing a Metal Object

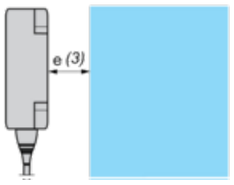

	e (1)	e (2)	e (3)
Flush mounted	200	400	40
Not flush mounted	600	not recommended	

Product datasheet XS8D1A1MAU20

Connections and Schema

Wiring Schemes

2-Wire NO Output

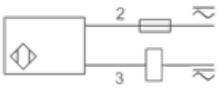

1/2"-20UNF

