SP 400

3½ Digit Backlit LCD Voltmeter Module

PRODUCT DESCRIPTION

The SP 400 features a 200mV d.c. measurement range with auto-zero and auto-polarity. Decimal points are user selectable. The SP 400 features a negative rail generator which enables the meter to measure a signal referenced to its own power supply GND. LED backlighting ensures excellent readability under low light conditions. The module is easily fitted into the panel, using the fixing clip provided. The module's low cost means it will suit high and low volume applications. The design of the panel meter's housing ensures splash proofing using the supplied seal.

FEATURES

- 9.75mm (0.38") Digit Height
- 200mV d.c. Full Scale Reading
- 3.0 to 7.5V or 6.0 to 15.0V Operation
- Auto-zero and Auto-polarity
- Programmable Decimal Points
- LED Backlighting
- Low Battery Warning
- Splash Proof

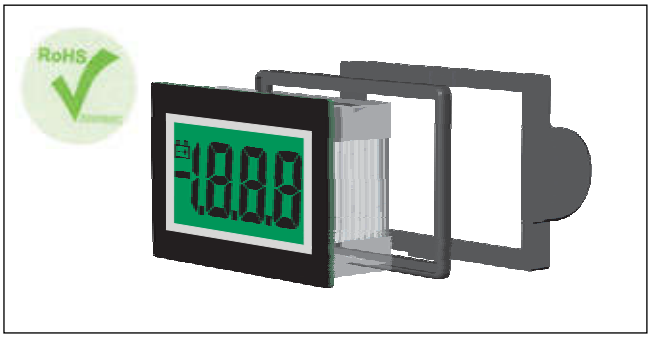

TYPICAL APPLICATIONS

- Precision Instrumentation Systems
- Power Supply Monitoring
- Test Boxes
- Panel-Mount Indication
- Low Power Voltage Measurement

ORDERING INFORMATION

	Stock Number
Standard Meter	**SP 400**

ELECTRICAL SPECIFICATIONS

Specification		Min.	Typ.	Max.	Unit
Accuracy (overall error) *			0.1		% (±1 count)
Linearity				±1	count
Sample rate			2.5		samples/sec
Operating temperature range		0		50	°C
Temperature stability			100		ppm/°C
Supply voltage	V+ to GND configuration	3.0	5.0	7.5	V d.c.
	V+ to V- configuration	6.0	9.0	15.0**	V d.c.
Supply current	V+ to GND configuration		350		µA
	V+ to V- configuration		175		µA
Backlight supply voltage		4.75	5.0	***	V d.c.
Backlight supply current @ 5V d.c.			40	80****	mA
Input leakage current (Vin = 0V)			1	10	pA

* To ensure maximum accuracy, re-calibrate periodically.
** Operation of the meter beyond the maximum supply voltage rating may cause permanent damage to the meter.
*** An external series resistor is required above 5V, see Applications.
**** This specification linearly derates to 50mA @ 50°C.

Unless otherwise noted, specifications apply at T_A=25°C, V_{supply}=5Vd.c. (f_{clock}=48kHz) and are tested with the module configured for single ended input mode.

SAFETY

To comply with the Low Voltage Directive (LVD 93/68/EEC), input voltages to the module's pins must not exceed 60Vdc. The user must ensure that the incorporation of the panel meter into the user's equipment conforms to the relevant sections of BS EN 61010 (Safety Requirements for Electrical Equipment for Measuring, Control and Laboratory Use).

LASCAR ELECTRONICS LTD.
MODULE HOUSE,
WHITEPARISH,
WILTSHIRE SP5 2SJ,
UK
TEL: +44 (1794) 884567
FAX: +44 (1794) 884616
E-mail: sales@lascar.co.uk

LASCAR ELECTRONICS INC.
4258 WEST 12th STREET,
ERIE,
PA 16505,
USA
TEL: +1 (814) 835 0621
FAX: +1 (814) 838 8141
E-mail: us-sales@lascarelectronics.com

LASCAR ELECTRONICS (HK) LTD.
8th FLOOR, CHINA AEROSPACE CENTRE,
143 HOI BUN ROAD,
KWUN TONG, KOWLOON,
HONG KONG
TEL: +852 2389 6502
FAX: +852 2389 6535
E- mail: saleshk@lascar.com.hk

DIMENSIONS

All dimensions in mm (inches)

a. 0.75 (0.03)
b. 10.00 (0.39)
c. 6.00 (0.24)

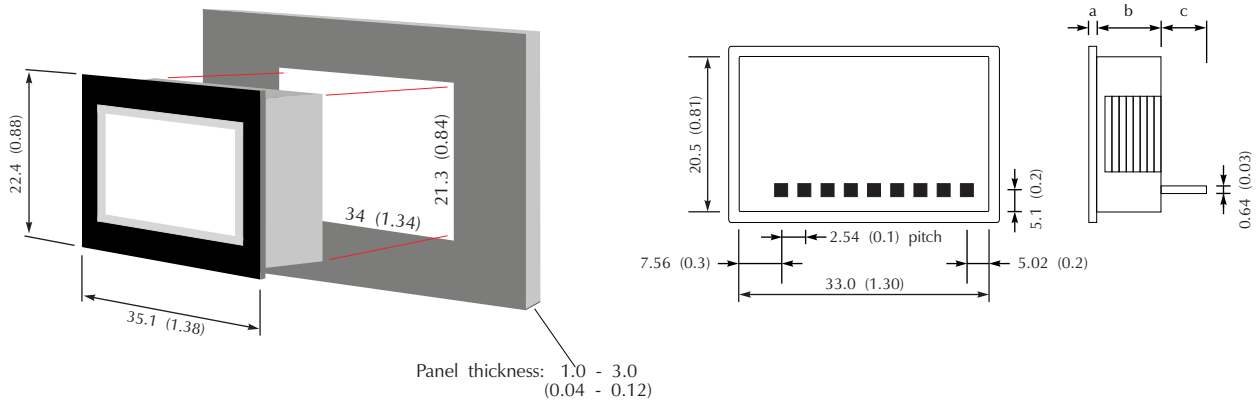

PANEL FITTING

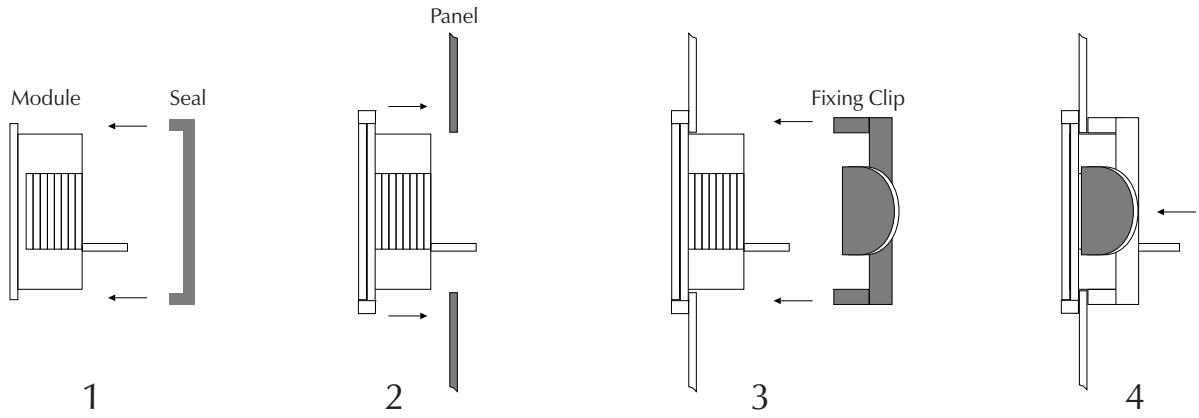

FUNCTIONAL BLOCK DIAGRAM

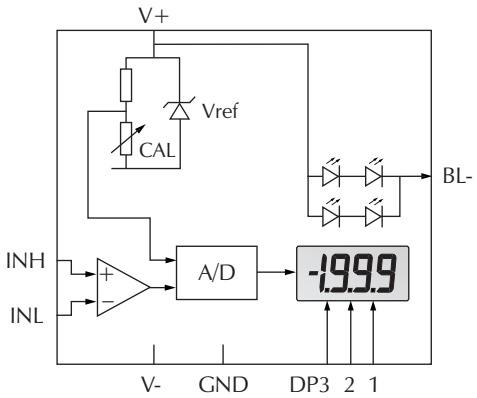

PIN CONFIGURATION (rear view)

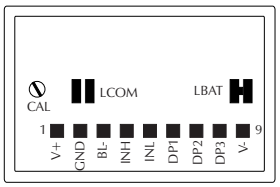

CIRCUIT DIAGRAM

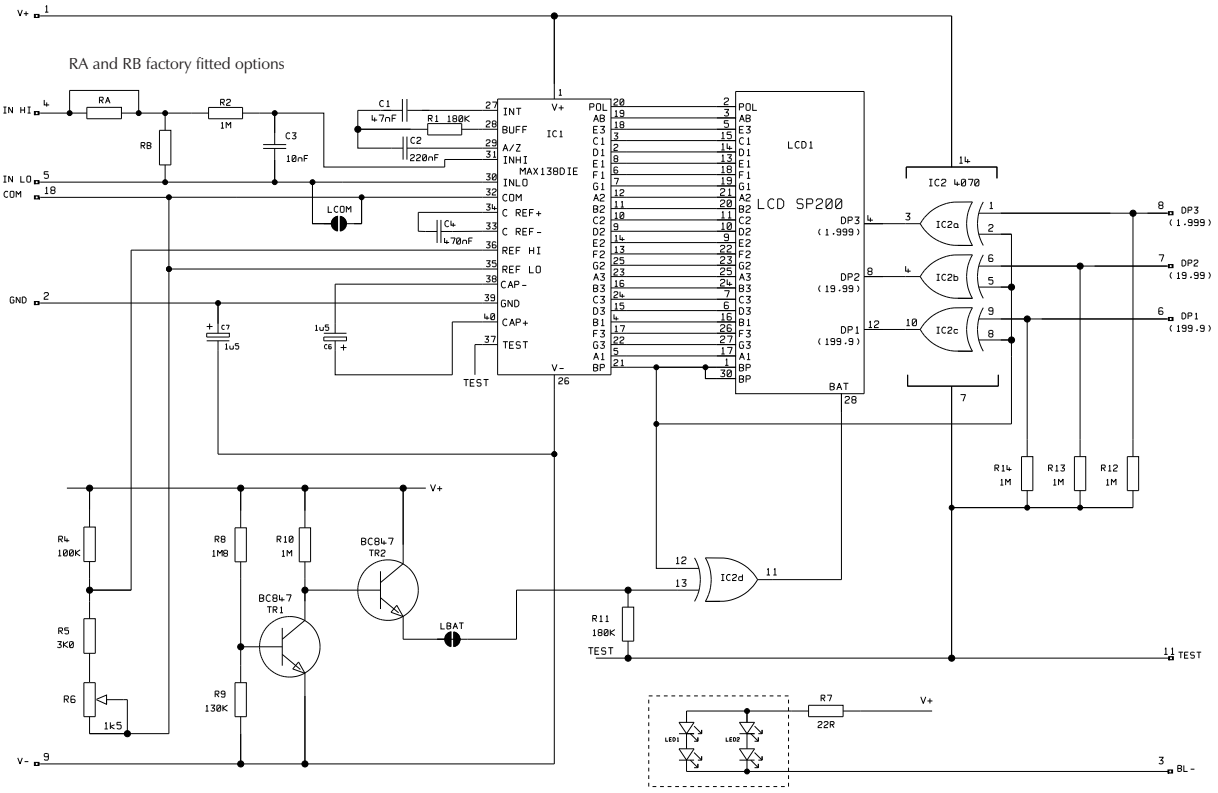

Pins 11 and 18 not fitted as standard

PIN FUNCTIONS

1. V+ Positive power supply to the meter.
2. GND 0V power supply to the meter (3.0 to 7.5V meter power supply applications only).
3. BL- Connect to the meter's negative supply voltage to switch on the LED backlighting. For meter supply voltages above 5V, add a series resistor Rs. See Applications for suitable circuit diagrams.
4. INH Positive measuring input.
5. INL Negative measuring input.
6. DP1 Connect to V+ to display DP1 (199.9).
7. DP2 Connect to V+ to display DP2 (19.99).
8. DP3 Connect to V+ to display DP3 (1.999).
9. V- Negative power supply to the meter (6.0 to 15.0V meter power supply applications only).

Note:

A negative supply is generated internally and mirrors the positive supply. For example: if V+ is +5V, then the internally generated V- is -5V. When measuring with the input referenced to the same supply rail as that of the panel meter, then the limitations on the input range are (V- + 1.5V) to (V+ - 1.5V).

Solder Links:

LCOM Normally Open. Connects INL to COM.
LBAT Normally Closed. Cut this link to disable the low battery warning sign.

SCALING

Two external resistors Ra and Rb may be used to alter the full scale reading (FSR) of the meter - see table. The meter will have to be re-calibrated by adjusting the calibration potentiometer on the rear of the module.

	FSR	Ra	Rb
Voltage	2V	910k	100k
	20V	1M	10k
	200V	1M	1k
	2000V*	1M	100R
Current	200µA	0R	1k
	2mA	0R	100R
	20mA	0R	10R
	200mA	0R	1R

*Ensure that Ra is rated for high voltage use.

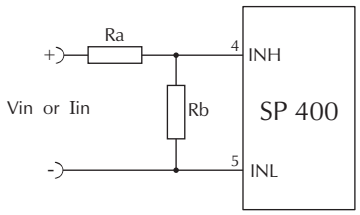

APPLICATIONS

Do not connect more than one meter to the same power supply if the meters cannot use the same signal ground. Taking any input beyond the power supply rails will damage the meter.

5V supply operation (3.0 to 7.5V Meter Power Supply)

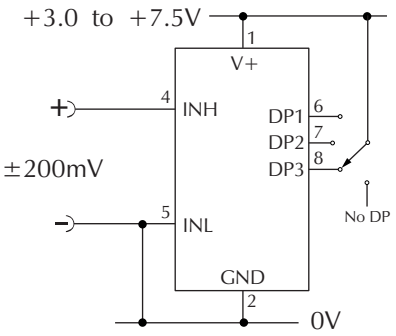

Measuring a single ended input voltage referenced to supply, i.e. the input voltage and the meter's power supply share the same 0V rail.
Ensure solder link LCOM is open.

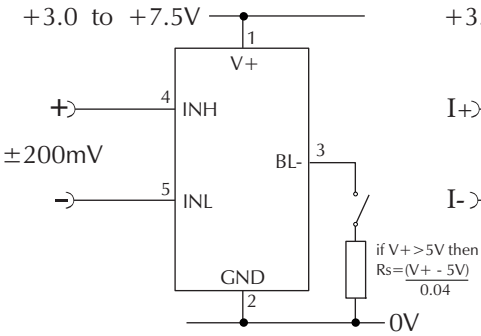

Measuring an input voltage referenced to a floating supply, i.e. the input voltage and the meter's power supply are isolated from each other.
Ensure solder link LCOM is closed.

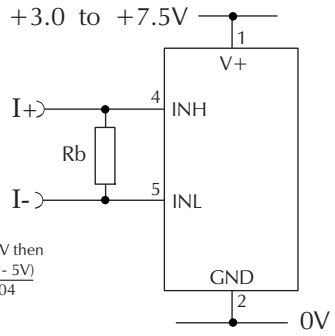

Measuring a current from a circuit which is floating with respect to the DPM's supply, i.e. the current and the meter's power supply are isolated from each other.
Ensure solder link LCOM is closed.

9V supply operation (6.0 to 15.0V Meter Power Supply)

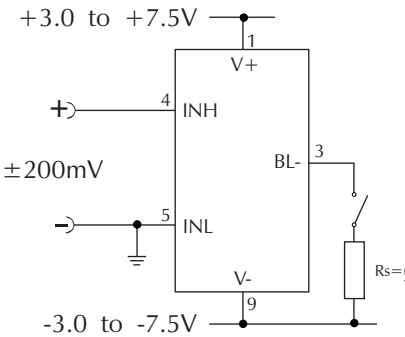

Measuring a single ended input voltage referenced to supply, i.e. the input voltage and the meter's power supply share the same 0V rail.
Ensure solder link LCOM is open.

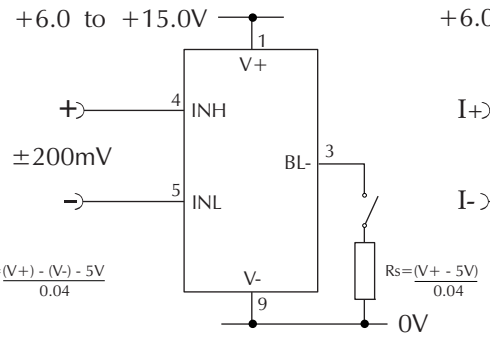

Measuring an input voltage referenced to a floating supply, i.e. the input voltage and the meter's power supply are isolated from each other.
Ensure solder link LCOM is closed.

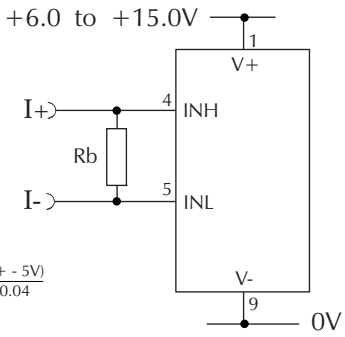

Measuring a current from a circuit which is floating with respect to the DPM's supply, i.e. the current and the meter's power supply are isolated from each other.
Ensure solder link LCOM is closed.