herga

Innovation Quality Service

6450 -xxxx

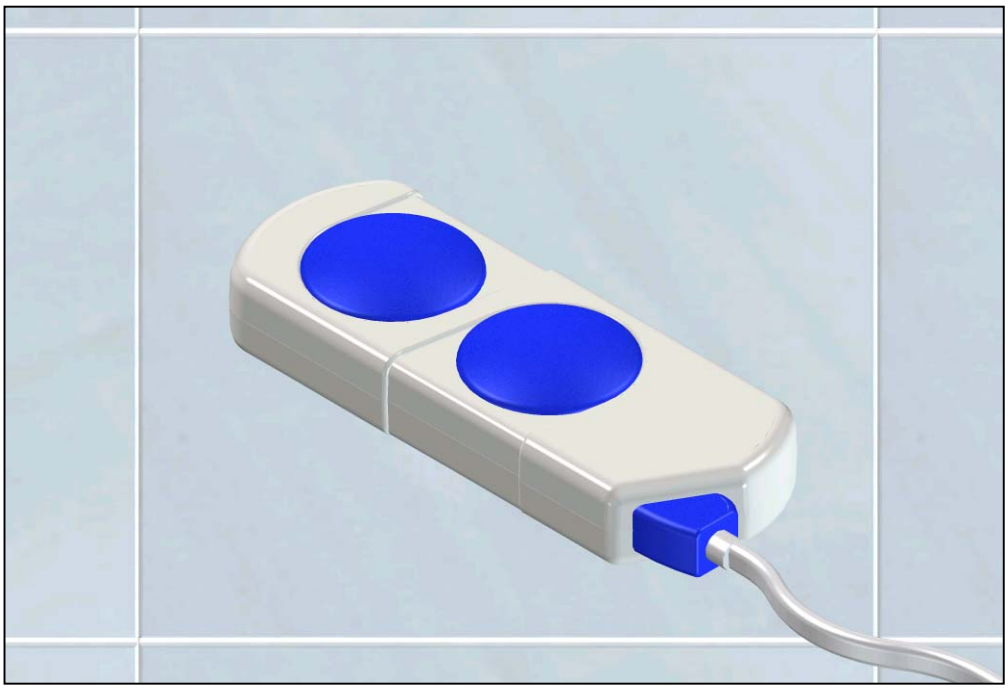

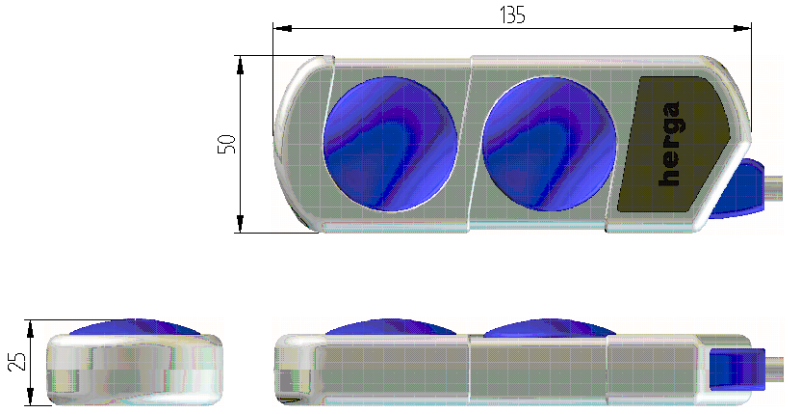

Benefits

- An air-operated hand control offering inherently safe remote switching capability.
- The hand controls strong all-plastic build makes it robust, yet comfortable and light.
- Large soft touch buttons allow the control to be operated with the minimum of effort.
- Bellows actuation, offers a waterproof solution for wet and hazardous environments.
- Available with grey or blue buttons.
- Compatible with all air operated switch elements.
- Complete with 2m of twin tubing.