X20(c)AO4632

1 General information

The module is equipped with 4 outputs with 16-bit (including sign) digital converter resolution. It is possible to select between the current and voltage signal using different terminals.

- 4 analog outputs
- Either current or voltage signal possible
- 16-bit digital converter resolution

2 Coated modules

Coated modules are X20 modules with a protective coating for the electronics component. This coating protects X20c modules from condensation and corrosive gases.
The modules' electronics are fully compatible with the corresponding X20 modules.

For simplification purposes, only images and module IDs of uncoated modules are used in this data sheet.

The coating has been certified according to the following standards:

- Condensation: BMW GS 95011-4, 2x 1 cycle
- Corrosive gas: EN 60068-2-60, method 4, exposure 21 days



2.1 -40°C starting temperature

The starting temperature describes the minimum permissible ambient temperature when the power is switched off at the time the coated module is switched on. This is permitted to be as low as -40°C. During operation, the conditions as specified in the technical data continue to apply.

Information:

It is important to absolutely ensure that there is no forced cooling by air currents in a closed control cabinet, for example using a fan or ventilation slots.

3 Order data

Model number	Short description	Figure
	Analog outputs	
X20AO4632	X20 analog output module, 4 outputs, ±10 V or 0 to 20 mA, 16-bit converter resolution	
X20cAO4632	X20 analog output module, coated, 4 outputs, ±10 V or 0 to 20 mA, 16-bit converter resolution, NetTime function	
	Required accessories	
	Bus modules	
X20BM11	X20 bus module, 24 VDC keyed, internal I/O supply continuous	
X20BM15	X20 bus module, with node number switch, 24 VDC keyed, internal I/O supply continuous	
X20cBM11	X20 bus module, coated, 24 VDC keyed, internal I/O supply continuous	
	Terminal blocks	
X20TB12	X20 terminal block, 12-pin, 24 VDC keyed	

Table 1: X20AO4632, X20cAO4632 - Order data

4 Technical data

Model number	X20AO4632	X20cAO4632
Short description		
I/O module	4 analog outputs ±10 V or 0 to 20 mA	
General information		
B&R ID code	0x1BA5	0xD575
Status indicators	I/O function per channel, operating state, module status	
Diagnostics		
Module run/error	Yes, using LED status indicator and software	Yes, using status LED and software
Channel type	Yes, using software	
Power consumption		
Bus	0.01 W	
Internal I/O	1.8 W (Rev. ≥ J0), 2.2 W (Rev. < J0)	1.8 W
Additional power dissipation caused by actuators (resistive) [W]	-	
Certifications		
CE	Yes	
ATEX	Zone 2, II 3G Ex nA nC IIA T5 Gc IP20, Ta (see X20 user's manual) FTZÚ 09 ATEX 0083X	
UL	cULus E115267 Industrial control equipment	
HazLoc	cCSAus 244665 Process control equipment for hazardous locations Class I, Division 2, Groups ABCD, T5	
DNV GL	Temperature: **B** (0 - 55°C) Humidity: **B** (up to 100%) Vibration: **B** (4 g) EMC: **B** (bridge and open deck)	
LR	ENV1	
KR	Yes	
EAC	Yes	
KC	Yes	-
Analog outputs		
Output	±10 V or 0 to 20 mA, via different terminal connections	
Digital converter resolution		
Voltage	±15-bit	
Current	15-bit	
Conversion time	50 µs for all outputs	
Settling time on output change over entire range	500 µs	
Switch on/off behavior	Internal enable relay for startup	Internal enable relay for booting
Max. error		
Voltage		
Gain	0.04% [1]	
Offset	0.022% [2]	
Current		
Gain	0.09% [1]	
Offset	0.045% [2]	
Output protection	Short-circuit proof	Short circuit protection
Output format		
Voltage	INT 0x8001 - 0x7FFF / 1 LSB = 0x0001 = 305.176 µV	
Current	INT 0x0000 - 0x7FFF / 1 LSB = 0x0001 = 610.352 nA	
Load per channel		
Voltage	Max. ±10 mA, load ≥1 kΩ	Max. ±10 mA, load ≥1 kΩ
Current	Load max. 600 Ω (Rev. ≥ J0), 500 Ω (Rev. < J0)	Max. load is 600 Ω
Short-circuit proof	Current limiting ±40 mA	
Output filter	First-order low-pass filter / cutoff frequency 10 kHz	1st-order low pass / cutoff frequency 10 kHz
Max. gain drift		
Voltage	0.01 %/°C [1]	
Current	0.02%/°C [1]	0.02 %/°C [1]
Max. offset drift		
Voltage	0.012%/°C [2]	0.012 %/°C [2]
Current	0.012%/°C [2]	0.012 %/°C [2]
Error caused by load change		
Voltage	Max. 0.11%, from 10 MΩ → 1 kΩ, resistive	
Current	Max. 0.5%, from 1 Ω → 600 Ω, resistive	
Nonlinearity	<0.005% [3]	
Isolation voltage between channel and bus	500 V_{eff}	
Electrical properties		
Electrical isolation	Channel isolated from bus Channel not isolated from channel	

Table 2: X20AO4632, X20cAO4632 - Technical data

Model number	X20AO4632	X20cAO4632
Operating conditions		
Mounting orientation		
Horizontal	Yes	
Vertical	Yes	
Installation elevation above sea level		
0 to 2000 m	No limitation	No limitations
>2000 m	Reduction of ambient temperature by 0.5°C per 100 m	
Degree of protection per EN 60529	IP20	
Ambient conditions		
Temperature		
Operation		
Horizontal mounting orientation	-25 to 60°C (Rev. ≥ J0), 0 to 55°C (Rev. < J0)	-25 to 60°C
Vertical mounting orientation	-25 to 50°C (Rev. ≥ J0), 0 to 50°C (Rev. < J0)	-25 to 50°C
Derating	See section "Derating".	See section "Derating"
Storage	-40 to 85°C	
Transport	-40 to 85°C	
Relative humidity		
Operation	5 to 95%, non-condensing	Up to 100%, condensing
Storage	5 to 95%, non-condensing	
Transport	5 to 95%, non-condensing	
Mechanical properties		
Note	Order 1x terminal block X20TB12 separately. Order 1x bus module X20BM11 separately.	Order 1x X20TB12 terminal block separately Order 1x X20cBM11 bus module separately
Pitch	12.5 $^{+0.2}$ mm	12.5$^{+0.2}$ mm

Table 2: X20AO4632, X20cAO4632 - Technical data

1) Based on the current output value.
2) Based on the entire output range.
3) Based on the output range.

5 LED status indicators

For a description of the various operating modes, see section "Additional information - Diagnostic LEDs" of the X20 system user's manual.

Figure	LED	Color	Status	Description
	r	Green	Off	No power to module
			Single flash	RESET mode
			Double flash	BOOT mode (during firmware update)[1)]
			Blinking	PREOPERATIONAL mode
			On	RUN mode
	e	Red	Off	No power to module or everything OK
			On	Error or reset status
	1 - 4	Orange	Off	Value = 0
			On	Value ≠ 0

1) Depending on the configuration, a firmware update can take up to several minutes.

6 Pinout

The individual channels can be configured for either current or voltage signals. The type of signal is also determined by the terminals used.

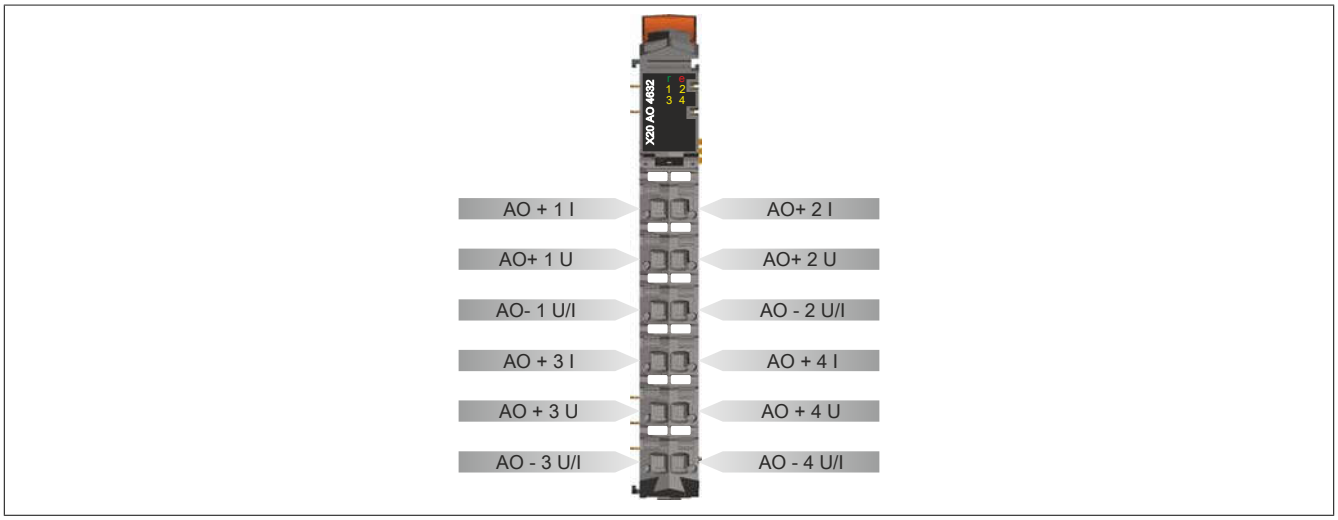

7 Connection example

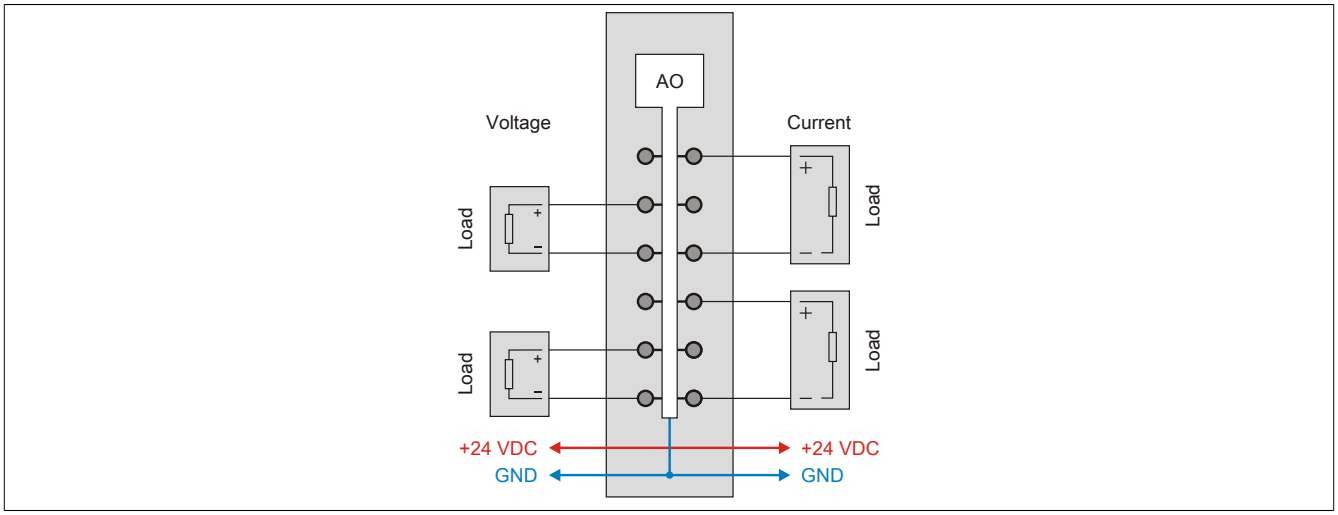

8 Output circuit diagram

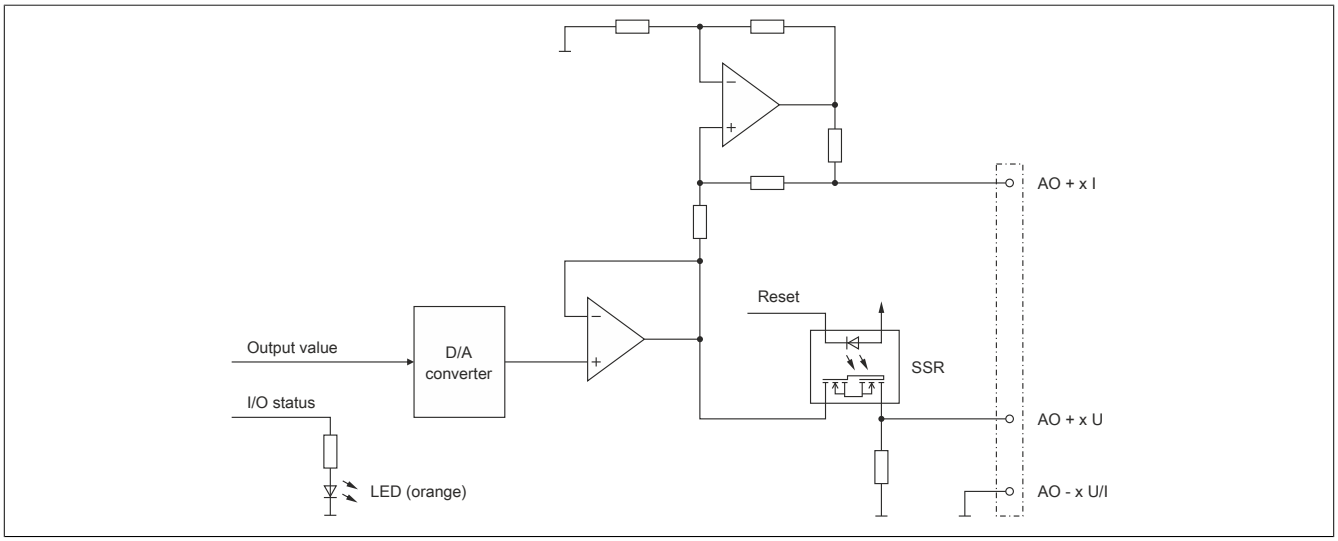

9 Derating

To ensure proper operation, the following points must be taken into account:

- The derating values listed below must be taken into account.
- In mixed operation with one current output, the mean value of both derating curves must be applied.
- In mixed operation with 2 or 3 current outputs, the derating of the current outputs must be applied.

Horizontal mounting orientation

Revision J0 and later	Prior to revision J0
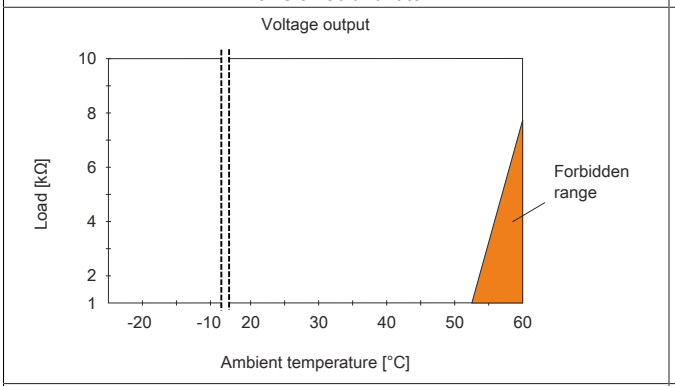	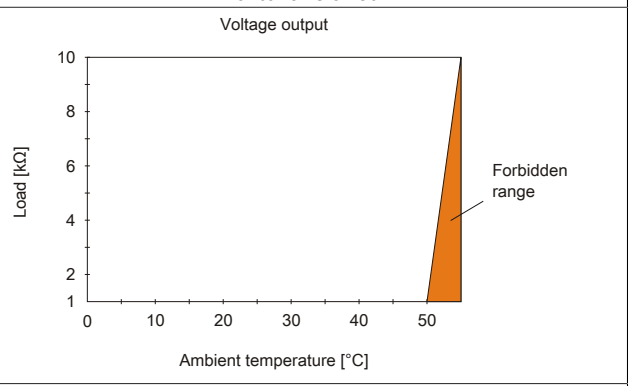
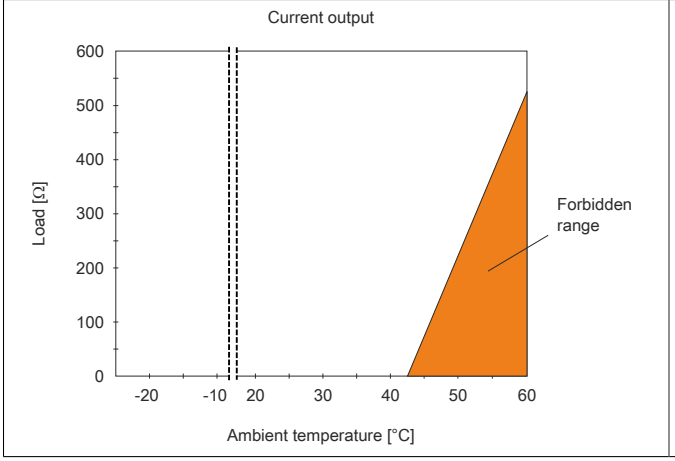	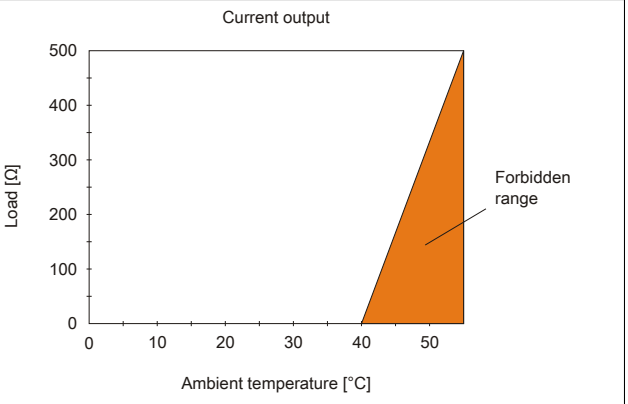

Vertical mounting orientation

Revision J0 and later	Prior to revision J0
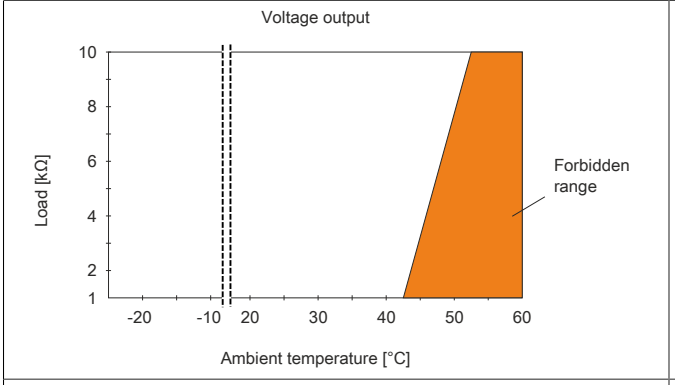	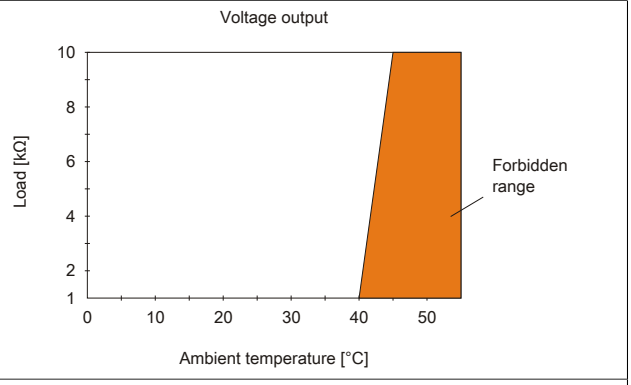
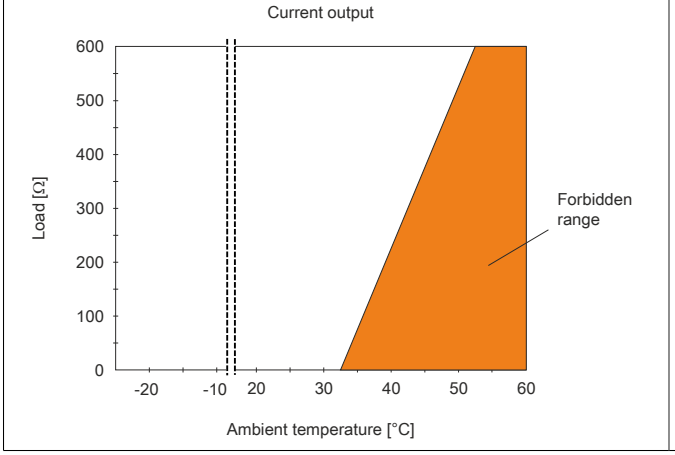	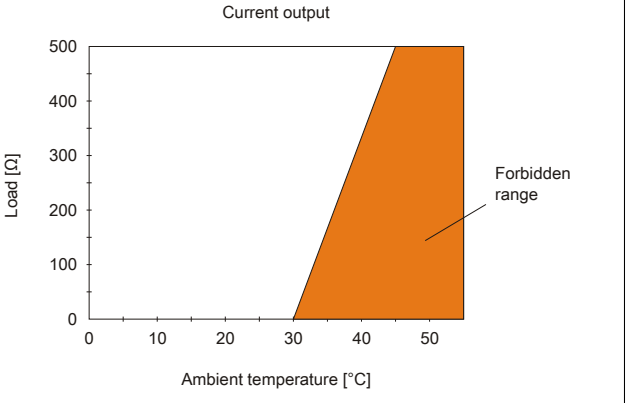

10 Register description

10.1 General data points

In addition to the registers described in the register description, the module has additional general data points. These are not module-specific but contain general information such as serial number and hardware variant.

General data points are described in section "Additional information - General data points" of the X20 system user's manual.

10.2 Function model 0 - Standard

Register	Name	Data type	Read		Write	
			Cyclic	Non-cyclic	Cyclic	Non-cyclic
Analog signal - Configuration						
0	ConfigOutput01 (channel type)	UINT				•
Analog signal - Communication						
Index * 2	AnalogOutput0N (Index N = 1 to 4)	INT			•	
10 + Index * 4	AnalogOutputDelayed0N (Index N = 0 to 3)	INT			•	
12	OutputDelayConfig00	UINT			•	
18	OutputDelayConfig01	UINT			•	
14	AnalogOutputLatchTime00	UINT	•			
22	AnalogOutputLatchTime01	UINT	•			
20	Error	UINT	•			

10.3 Function model 254 - Bus controller

Register	Offset[1)]	Name	Data type	Read		Write	
				Cyclic	Non-cyclic	Cyclic	Non-cyclic
Analog signal - Configuration							
0	-	ConfigOutput01 (channel type)	UINT				•
Analog signal - Communication							
10 + Index * 4	Index * 2 - 2	AnalogOutput0N (Index N = 1 to 4)	INT			•	

1) The offset specifies the position of the register within the CAN object.

10.3.1 Using the module on the bus controller

Function model 254 "Bus controller" is used by default only by non-configurable bus controllers. All other bus controllers can use other registers and functions depending on the fieldbus used.

For detailed information, see section "Additional information - Using I/O modules on the bus controller" of the X20 user's manual (version 3.50 or later).

10.3.2 CAN I/O bus controller

The module occupies 1 analog logical slot on CAN I/O.

10.4 Analog output - Configuration

10.4.1 Setting the channel type

Name:
ConfigOutput01

This register can be used to set the channel type of the outputs.

Each channel is capable of handling either current or voltage signals. The type of signal is determined by the terminal connections used. Since current and voltage require different adjustment values, it is also necessary to configure the desired type of output signal. The following output signals can be set:

- ±10 V voltage signal
- 0 to 20 mA current signal

Data type	Values	Bus controller default setting
UINT	See the bit structure.	0

Bit structure:

Bit	Description	Value	Information
0 - 7	Reserved	0	
8	Channel 1	0	Voltage signal (bus controller default setting)
		1	Current signal
...		...	
11	Channel 4	0	Voltage signal (bus controller default setting)
		1	Current signal
12 - 15	Reserved	0	

10.5 Analog output - Configuration

10.5.1 Output values of the analog outputs

Name:
AnalogOutput01 to AnalogOutput04

These registers provide the standardized output values. Once a permitted value is received, the module outputs the respective current or voltage.

Information:

The value "0" disables the channel status LED.

Data type	Value	
INT	-32767 to 32767	Voltage
	0 to 32767	Current

10.5.2 Value for delayed output

Name:
AnalogOutputDelayed00 to AnalogOutputDelayed03

These registers contain the values with which the analog outputs are overwritten after the delay configured with "OutputDelayConfig0x" on page 8 has expired.

Data type	Value	Output Signal
INT	-32768 to 32767	Voltage signal -10 VDC to 10 VDC
	0 to 32767	Current signal 0 mA to 20 mA

10.5.3 Configuration of the output delay

Name:
OutputDelayConfig00 to OutputDelayConfig01

2 configurations independent from each other can be created using these registers.

The delay time after which "AnalogOutputDelay0x" on page 7 should overwrite the channel can be configured using bits 0 to 13. Using bits 14 and 15, the channel is determined for which the configuration is valid.

Each channel can only be overwritten once. No additional channel can be overwritten while the respective time is running.

Data type	Values
UINT	See the bit structure.

Bit structure:

Bit	Description	Value	Information
0 - 13	Delay time for the selected channel	x	Time in µs
14 - 15	Channel	00	Analog output 01
		01	Analog output 02
		10	Analog output 03
		11	Analog output 04

10.5.4 Delay time for the output value

Name:
AnalogOutputLatchTime00 to AnalogOutputLatchTime01

These registers can be used to read when the respective overwrite value was actually written on the output.

Data type	Value
UINT	Actual delay time

10.5.5 Error register for counter

Name:
Error

There are some limitations because 2 timers are used. This register is available to the user for reporting these potential errors.
The error bits are deleted as soon as a valid state is reset.

Data type	Values
UINT	See the bit structure.

Bit structure:

Bit	Description	Value	Information
0	Analog output 01	0	OK
		1	Has already been overwritten
...		...	
3	Analog output 04	0	OK
		1	Has already been overwritten
4	Timer 01	0	OK
		1	Already in use
5	Timer 02	0	OK
		1	Already in use
6	Timer 01 and 02	0	OK
		1	Both timers refer to the same channel number
7 - 15	Reserved	-	

10.6 Minimum cycle time

The minimum cycle time specifies the time up to which the bus cycle can be reduced without communication errors occurring. It is important to note that very fast cycles reduce the idle time available for handling monitoring, diagnostics and acyclic commands.

Minimum cycle time
200 µs

10.7 Minimum I/O update time

The minimum I/O update time specifies how far the bus cycle can be reduced so that an I/O update is performed in each cycle.

Minimum I/O update time
200 µs