Sensor, Series ST4

R412019680

AVENTICS Series ST4 Magnetic proximity sensors

The AVENTICS Series ST4 sensors can be integrated with all AVENTICS pneumatic actuators and are ideal for small handling. The Series ST4 can be assembled quickly and easily with just a quarter turn of the combination screw.



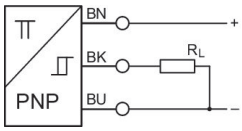

Technical data

Industry	Industrial
Direct mounting for series	PRA SSI GSU RTC CKP GPC MSC MSN RCM CVI
Indirect mounting for series	MNI CSL-RD ICM
Slot width	4 mm C-slot
Cable	with cable
Type of contact	electronic PNP
Certificates	UL (Underwriters Laboratories) cULus RoHS
Protection class	IP65 IP67

Min. ambient temperature	-30 °C
Max. ambient temperature	80 °C
Voltage drop U at Imax	≤ 2,5 V
Max. DC switching current	0.1 A
Switching point precision	±0,1 mT
Switching logic	NO (make contact)
Display	LED
LED status display	Yellow
Electrical connection 2, type	open cable ends
Electrical connection 2, number of poles	3-pin
Min. operating voltage DC	10 V DC
Max. operating voltage DC	30 V DC
Short circuit resistance	short circuit resistant Protected against polarity reversal
Shock resistance	30 g / 11 ms
Vibration resistance	10 - 55 Hz, 1 mm
Cable length L	3 m
Mounting screw	Combination: slotted and hexagon socket

Material

Housing material	Polyamide fiber-glass reinforced
Material cable sheath	Polyurethane
Part No.	R412019680

Technical information

The max. switching capacity must not be exceeded.

The pressure dew point must be at least 15 °C less than ambient and medium temperature and may not exceed 3 °C.

The oil content of compressed air must remain constant during the life cycle.

Use only the approved oils from AVENTICS. Further information can be found in the “Technical information” document (available in https://www.emerson.com/en-us/support).

Dimensions

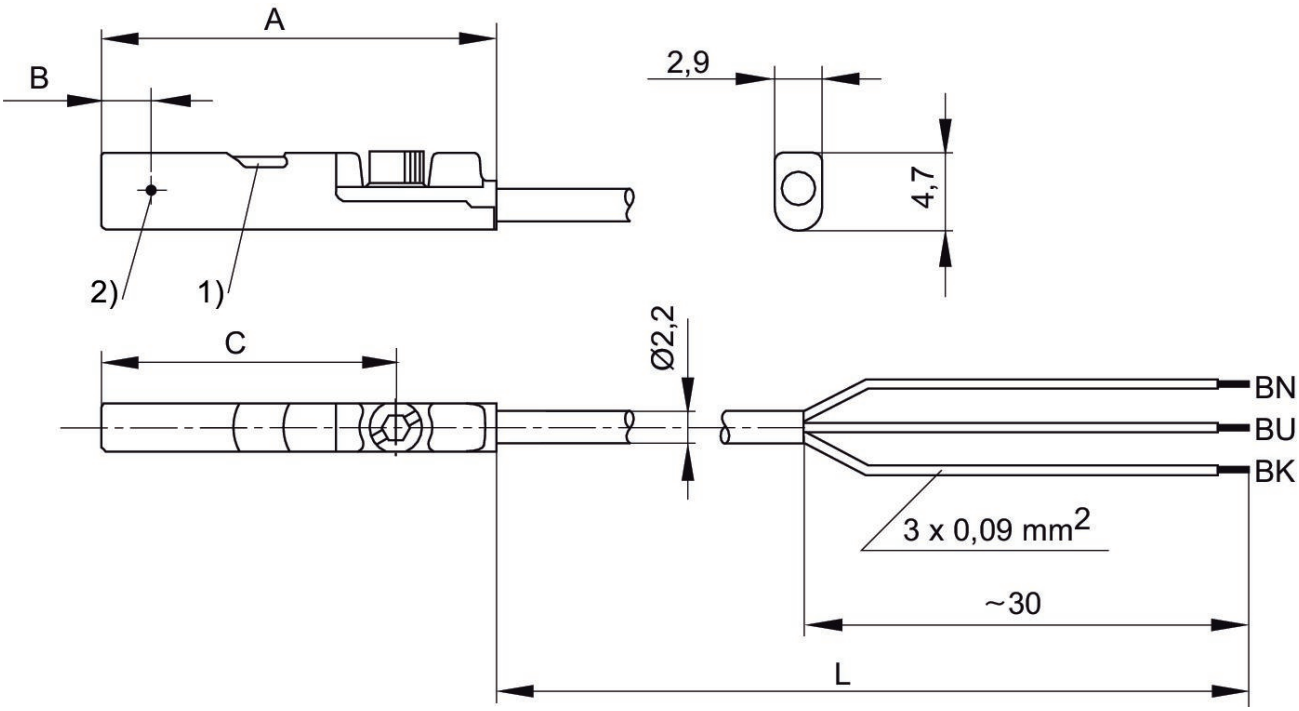

1) LED 2) Switching point
L = cable length BN = brown, BK = black, BU = blue

Part No.	A	B	C
R412019488	26.3	6.3	20.3
R412019489	26.3	6.3	20.3
R412019680	23.7	2.8	17.7
R412019681	23.7	2.8	17.7
R412019684	23.7	2.8	17.7
R412019685	23.7	2.8	17.7