Brand of NTN corporation

Technical data

EXFE218

Bearing units



Grey cast housing, radial insert ball bearing with eccentric locking collar, seal with slinger

KIT CONTENT

EX218G2, FE218

VISUAL (S)

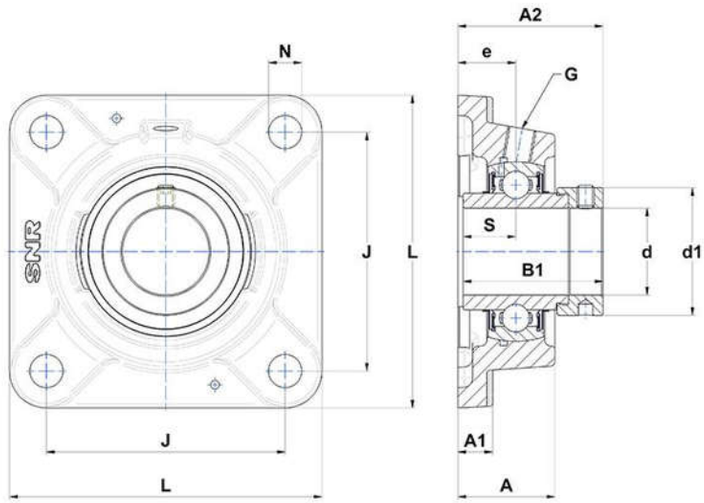

PRODUCT DEFINITION

Brand	SNR
A - Housing height	45 mm
A1 - Housing foot height / flange height	22 mm
A2 - Total height from mounting surface	71,8 mm
B - Width of Inner Ring	55 mm
B1 - Overall width Inner Ring	72,5 mm

PRODUCT DEFINITION	
d - Shaft diameter	90 mm
d1 - Outer dia of eccent. Lock. collar / nut of adapter sleeve	120 mm
e - Distance mounting surface to bearing center	23,8 mm
G - Grease fitting	R1/8"
J - Mounting holes distance	187 mm
L - Housing width / diameter	235 mm
N - Mounting hole dimension	23 mm
S - Distance front side/bearing centre	24,5 mm

PRODUCT PERFORMANCE	
C - Dynamic load rating	96000000 mN
C0 - Static load rating	71500000 mN
Operating temperature min.	253,15 °K
Operating temperature max.	373,15 °K

OTHER FEATURES	
Mass	10,84 kg
Recommended tightening torque for set screw	33 N-m