PF 66.000 I PFA 60.000
ECOOL FILTERFAN I EXHAUST FILTER 640–785 m³/h

- installation size 6, air flow rate up to 785 m³/h
- three performance classes, cut-out compatible
- system of protection IP 54 and IP 55, NEMA type 12
- UL, cUL approval
- UV-resistance (IP 55 version, RAL 7035)
- cut-out compatible with installation size 6 from the 3rd Generation and with cooling unit DTFI 9021



PRODUCT		PF 66.000			
ARTICLE NO.	IP 54	11666022055	11666102055	11666152055	Unit
ARTICLE NO.	IP 55	11666023055	11666103055	11666153055	
DATA					
Rated voltage ±10 %		AC 50 I 60 Hz			
		400 3~ I 460 3~	230	115	V
Unimpeded airflow	IP 54	640 I 653			m³/h
	IP 55	770 I 785			
Airflow rate in comb. with exhaust filter	IP 54	445 I 445			
	IP 55	490 I 501			
Power consumption		120 I 155	120 I 160	110 I 160	W
Current consumption		0.26 I 0.25	0.53 I 0.72	0.96 I 1.4	A
Noise level according to EN ISO 3741		63 I 64			dB (A)
Weight		3.2			kg
Type of connection		spring-type terminal			
Fuse		6			A
System of protection according to EN 60529 / UL 50	IP 54	NEMA type 12 - standard filter			
	IP 55	NEMA type 12 - fluted filter			
Filtration efficiency	IP 54	91			%
	IP 55				
Filter mat quality class according to EN 779	IP 54	G 4			
	IP 55				
Duty cycle		100			%
Bearing type		ball bearing			
Service life L_{10} (+ 40 °C)[1]		40000			h
Temperature range		–40 … +55 I –40 … +131			°C I °F
Design (housing and protection against accidental contact)	IP 54	made of injection-moulded thermoplastic, self-extinguishing, UL 94 V0			
	IP 55	additional: UV-resistant			
Colour		RAL 7035 I different colours available on request			

ACCESSORIES		ARTICLE NUMBER
Exhaust filter	gray	11760002055
Exhaust filter	black	11760002050
Spare filter mats	5 pieces	18611600033
Thermostat		17121000000
Hygrostat		17207000000
Rainhood in stainless steel		18102000020

For additional models, options and voltages visit www.pfannenberg.com or contact us directly.

[1] fan failure is defined as being when the current and speed deviate or the operating noises are out of the ordinary

Cooling capacity performance curves

Static pressure performance curve

PF 66.000 IP 54

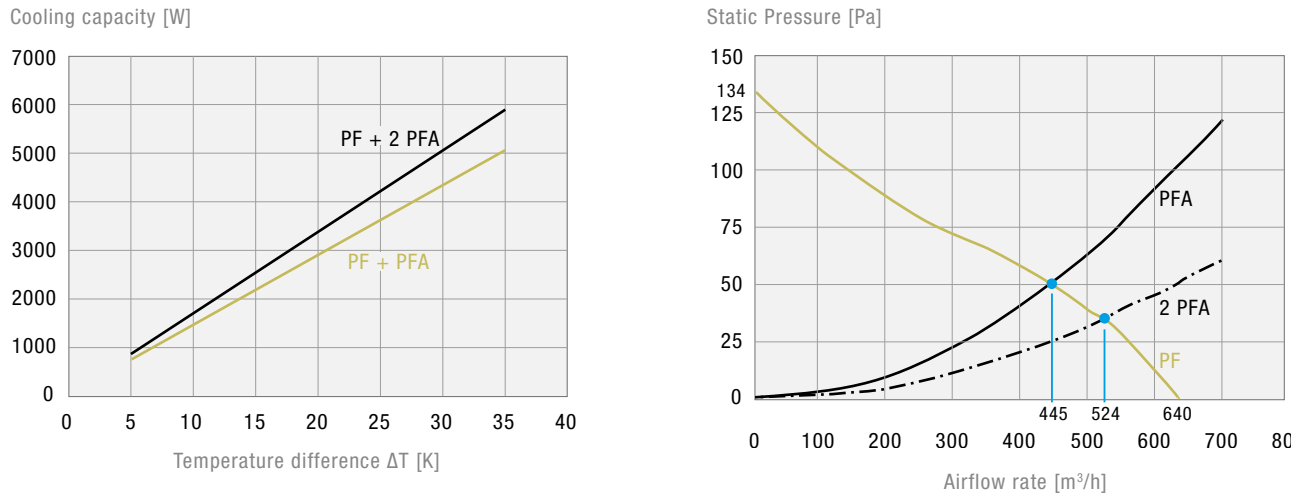

PF 66.000 IP 55

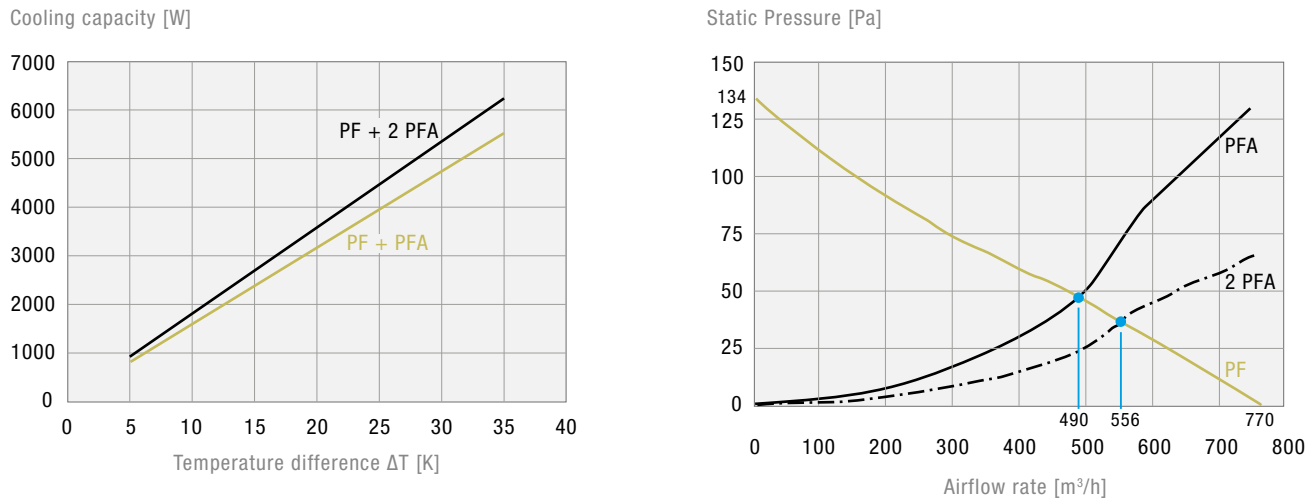

Dimensions

mm	PF 66.000	PFA 60.000
X	320	320
Y	320	320
Z1	7	7
Z2	150	39
A[1]	292	292
B[1]	292	292

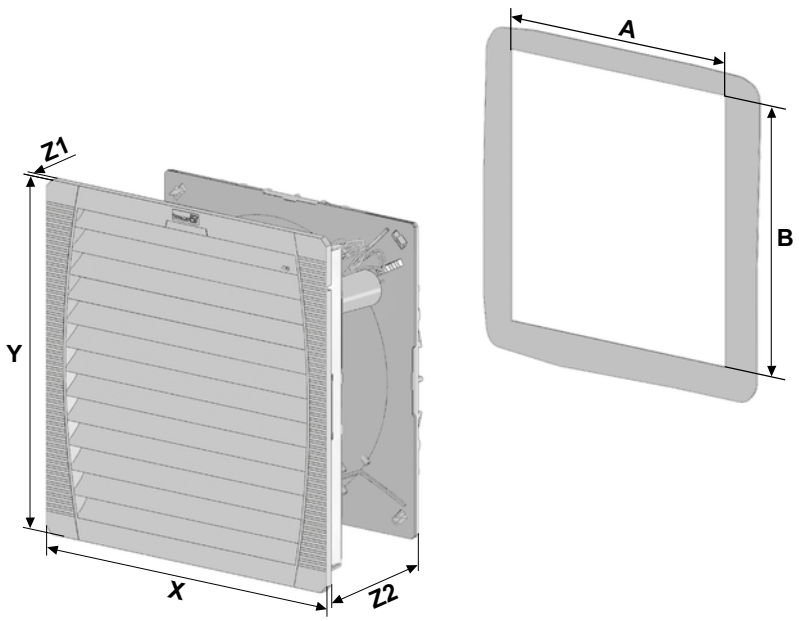

[1] for material thicknesses up to 2 mm
+ 1 mm for thickness of material > 2 mm ≤ 3 mm