E-Pack Installation Instructions

Enclosed Switch Disconnect Issue 2

CE

IEC 947-3

Features

Three and four-pole isolating switches fitted in tough, plastic enclosures. Fourth pole if fitted, can be used for switched neutral or auxiliary circuit switching.
The operating handle incorporates a padlocking facility.

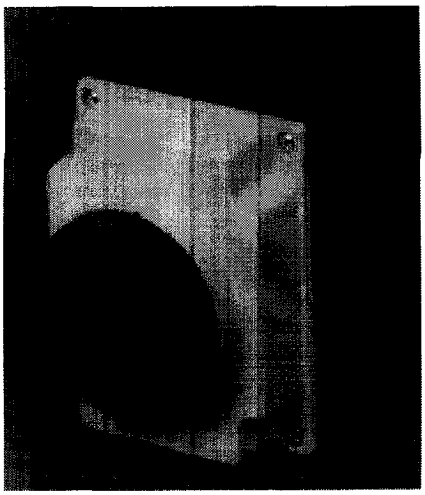

Fixing centre dimensions are marked on the base of the enclosure.

S37K5N - /S47K5N **7,5kW** 415V 3ph (AC23)
20 Amps Ith
IP65

Terminal Capacity
1 x 10mm² or 2 x 6mm²

S315KN - /S415KN **15kW** 415V 3ph (AC23)
40 Amps Ith
IP65

Terminal Capacity
1 x 10mm² or 2 x 6mm²

S418KN - **18,5kW** 415V 3ph (AC23)
50 Amps Ith
IP65

Terminal Capacity
1 x 25mm² or 2 x 10mm²

S426KN - **26kW** 415V 3ph (AC23)
63 Amps Ith
IP65

Terminal Capacity
1 x 25mm² or 2 x 10mm²

Typical Circuit Connections

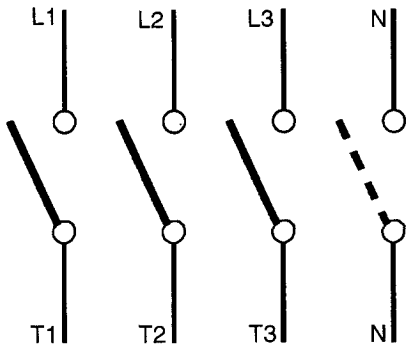

Isolate incoming supply before opening.

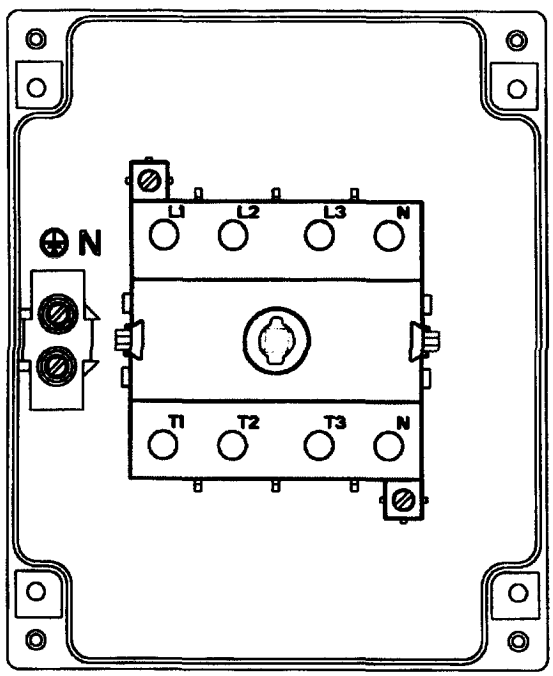

Dimensions (mm)

Switch S37K5N/ S47K5N and S315KN/ S415KN

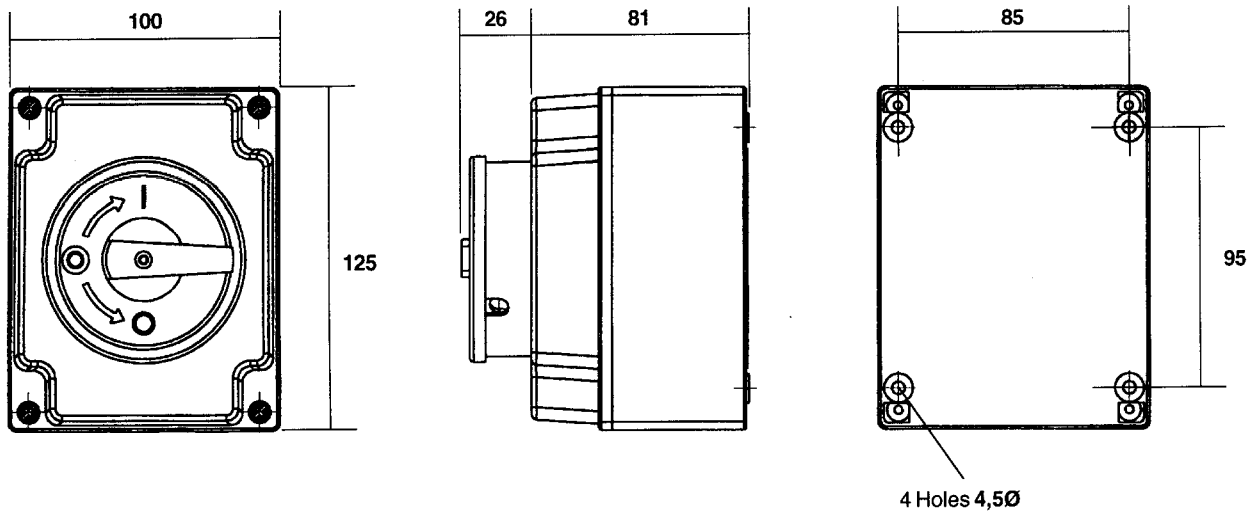

Switch S418KN and S426KN

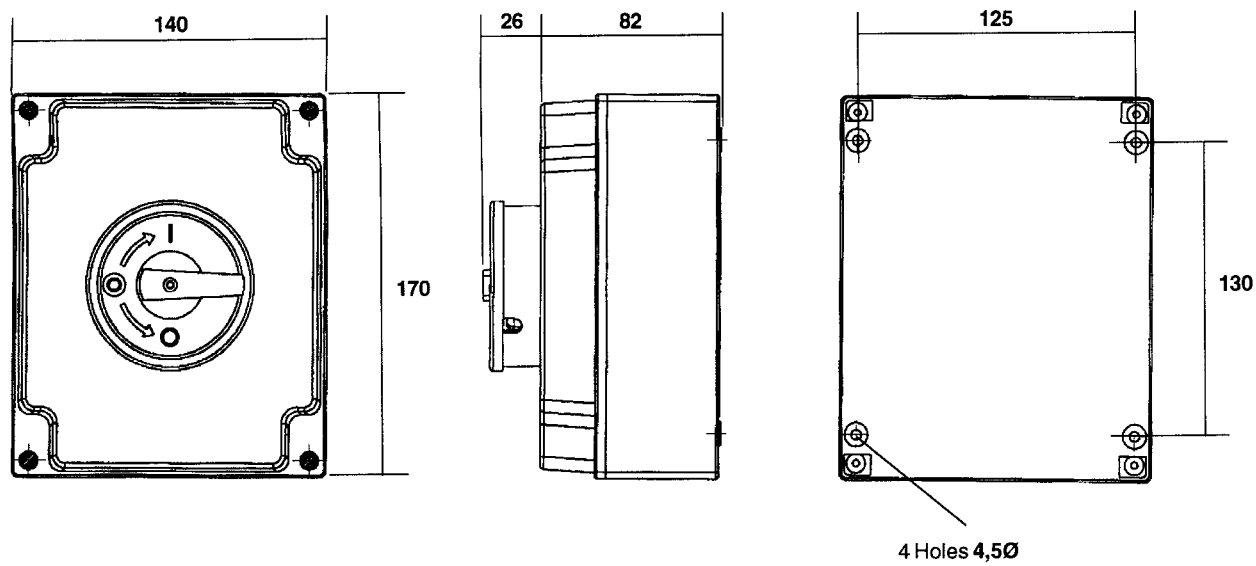

Council of European Communities Directives: The products in this publication conform to relevant EEC Directives and EN Standards. Installation and use of such products must be carried out by competent, properly trained personnel, complying with any instructions supplied by MTE.
Liability for improper incorporation, assembly, use, processing, storing or handling of goods remains the sole responsibility of the individual, or company carrying out such work.
This publication is for information only. Whilst every care has been taken in the preparation of this publication, no liability is accepted for any consequence of its use.
No licence to use any patent should be assumed. All dimensions quoted are approximate only and subject to change without notice, as are other technical features resulting from continual development and improvement.

06 12115/ 2E/ 1098

MTE Limited
Stephenson Road Leigh-On-Sea Essex SS9 5LS
Telephone 01702 421124 Fax 01702 421449