FB01G3PL

FUSE HOLDER UL CERTIFIED FOR CLASS CC FUSES FOR NORTH AMERICAN MARKET, FOR 10X38MM FUSES. 30A RATED CURRENT AT 690VAC, 3P. WITH STATUS INDICATOR. 3 MODULES



Electrical features			
IEC maximum rated current (In)		A	30
IEC maximum rated voltage (Un)		V	600
IEC Utilization category			AC22B 500V - AC21B 690V
Power dissipation Max		W	3
Derating factor of rated current In for different ambient temperature			
	20°C		1
	30°C		0.95
	40°C		0.9
	50°C		0.8
	60°C		0.7
	70°C		0.5
Derating factor of rated current In for side by side fuse holders (poles)			
	1-4		1
	5-6		0.8
	7-9		0.7
	≥10		0.6
Rated current (In)		A	30
Ambient conditions			
Operating temperature			
	min	°C	-20
	max	°C	+70
Storage temperature			
	min	°C	-40
	max	°C	+80
Max altitude		m	3000
Mechanical features			
Operating position			
	normal		Vertical plan
	allowable		Any
Fixing			35mm DIN rail
Tightening torque for terminals			
	max	Nm	2.5
	max	lbin	22
Conductor section			
	Flexible max (IEC)	mm²	16
	- Flexible max (AWG/kcmil)		8
	Rigid max (IEC)	mm²	16
	- Rigid max (AWG/kcmil)		8
Weight		g	21
Resistance & Protection			
Frontal IP degree			IP20
Dimensions			

The characteristics described in this document are subject to updates or modifications at any time. The descriptions, technical and functional information, illustrations and instructions in this brochure are purely illustrative, and are consequently not contractually binding

FB01G3PL

FUSE HOLDER UL CERTIFIED FOR CLASS CC FUSES FOR NORTH AMERICAN MARKET, FOR 10X38MM FUSES. 30A RATED CURRENT AT 690VAC, 3P. WITH STATUS INDICATOR. 3 MODULES

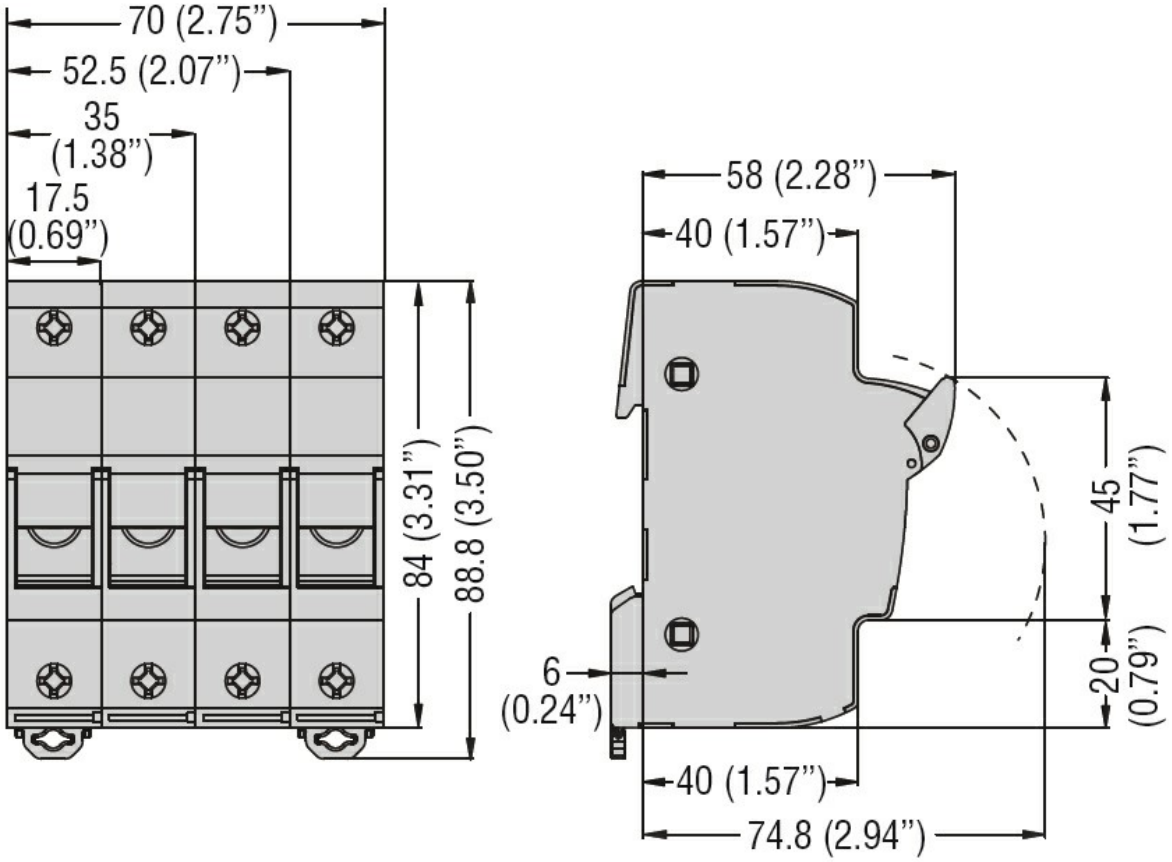

Wiring diagrams

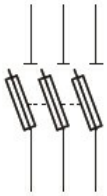

3P

Certifications and compliance

Compliance

CSA C22.2 n°4248.1
CSA C22.2 n°4248.4.
IEC/EN 60269-1
IEC/EN 60269-2
IEC/EN 60947-1
IEC/EN 60947-3
UL 4248-1
UL 4248-4

Certifications

EAC
UL

ETIM classification

ETIM 8.0	EC002705 - Holder for cylindrical fuse

The characteristics described in this document are subject to updates or modifications at any time. The descriptions, technical and functional information, illustrations and instructions in this brochure are purely illustrative, and are consequently not contractually binding